Technical Report 1622
March 1996

Acrylic Light Pipes for Interior Illumination of Hyperbaric Chambers

R. P. Johnson

Approved for public release; distribution is unlimited.

EXECUTIVE SUMMARY

Human-occupied hyperbaric chambers are used extensively throughout government and commercial facilities for compression and decompression of saturation divers; as recompression chambers for treating physiological problems resulting from diving, diving simulation, and testing; and for medical treatment. Hyperbaric chambers require interior lighting for the comfort and service of chamber occupants and to allow observation of occupants by chamber operators. In some cases, commercially available hardware used for hyperbaric chamber illumination does not meet all requirements for U.S. Navy service. The Naval Command, Control and Ocean Surveillance Center (NCCOSC) RDT&E Division (NRaD) has developed a new acrylic plastic light pipe for hyperbaric chamber illumination that can be installed in pipe-sized penetrations in the wall of a hyperbaric chamber that provides improved optical, mechanical, and structural performance over commercial hardware. This new light pipe design has been qualified and accepted for service by the U.S. Navy community in man-rated hyperbaric chambers for service to 1000 psi and 150°F. NRaD light pipe equipment placed into operational service has been manufactured, inspected, assembled, and tested to meet U.S. Navy standards as well as industrial recognized safety standards that govern the design of human-occupied pressure vessel hardware.

CONTENTS

INTRODUCTION 1

BACKGROUND 5

OPTICAL DESIGN 7

MECHANICAL DESIGN 9

STRUCTURAL DESIGN 11

QUALIFICATION TESTING FOR U.S. NAVY SERVICE 17

QUALITY CONTROL 19

MANUFACTURE 21

ASSEMBLY 23

QUALIFICATION TESTING FOR ASME–PVHO SAFETY STANDARD 25

CONCLUSIONS 29

RECOMMENDATIONS 31

REFERENCES 33

GLOSSARY 35

APPENDIX A: FEA COMMAND LOG TO CONSTRUCT MODEL OF AN ACRYLIC CONICAL FRUSTUM WINDOW (t/Di = 0.5) A-1

APPENDIX B: FEA COMMAND LOG TO CONSTRUCT MODEL OF NRAD WIDE ANGLE ACRYLIC LIGHT PIPE (W/O STEM) B-1

APPENDIX C: LIGHT PIPE ASSEMBLY QUALIFICATION/ACCEPTANCE TESTS . . . C-1

APPENDIX D: LIGHT PIPE ASSEMBLY QUALITY CONTROL TEST D-1

Figures

1. Typical hyperbaric viewport designs 37
2. Light pipe design details, front view 37
3. Light pipe design details, side view 38
4. Light pipes assembled into a hyperbaric chamber 38
5. Commercially available light pipes 39
6. Surface crazing/cracking in commercial narrow angle light pipes after 4 years service 39
7. Surface crazing/cracking in commercial wide angle light pipes after 4 years service 40
8. Detail of commercial wide angle light pipe surface damage 40
9. Commercial wide angle light pipe stem surface damage, detail 1 41
10. Commercial wide angle light pipe stem surface damage, detail 2 41

11. Commercial wide angle light pipe head surface damage, detail 1 42
12. Commercial wide angle light pipe head surface damage, detail 2 42
13. Commercial wide angle light pipe head surface damage, detail 3 43
14. Commercial narrow angle light pipe setscrew damage 43
15. NRaD narrow angle light pipe assembly 44
16. NRaD wide angle light pipe assembly 44
17. 55910-0128929 light pipe retainer 45
18. 55910-0128930 light pipe 46
19. 55910-0128931 light pipe adapter 47
20. 55910-0128932 light pipe assembly (sheet 1) 48
21. 55910-0128932 light pipe assembly (sheet 2) 49
22. 55910-0128933 spanner wrench 50
23. Comparison of commercial and NRaD narrow angle light pipe designs 51
24. Comparison of commercial and NRaD wide angle light pipe designs 51
25. Comparison of relative light intensities for narrow angle light pipe designs 52
26. Comparison of relative light intensities for wide angle light pipe designs 52
27. Acrylic conical frustum window (t/Di = 0.5) FEA model 53
28. Acrylic conical frustum window (t/Di = 0.5) deflected contour (30X) at 1000 psi 53
29. Acrylic conical frustum window (t/Di = 0.5) minimum principal stress contours at 1000 psi 54
30. Acrylic conical frustum window (t/Di = 0.5) maximum principal stress contours at 1000 psi 54
31. Acrylic conical frustum window (t/Di = 0.5) maxiimum principal stress contours at 1000 psi (low-pressure face edge detail) 55
32. NRaD acrylic wide angle light pipe (w/o stem) FEA model 55
33. NRaD acrylic wide angle light pipe (w/o stem) minimum principal stress contours at 1000 psi 56
34. NRaD acrylic wide angle light pipe (w/o stem) maximum principal stress contours at 1000 psi 56
35. NRaD acrylic wide angle light pipe (w/o stem) maximum principal stress contours at 1000 psi (low-pressure face edge detail) 57
36. NRaD acrylic wide angle light pipe FEA model 57
37. NRaD acrylic wide angle light pipe minimum principal stress contours at 1000 psi 58
38. NRaD acrylic wide angle light pipe maximum principal stress contours at 1000 psi 58
39. NRaD acrylic wide angle light pipe maximum principal stress contours at 1000 psi (stem/head junction detail) 59

40. NRaD CRES adapter equivalent stress contours at 1000 psi 59
41. NRaD CRES adapter equivalent stress contours at 1000 psi (stem/head transition detail) 60
42. NRaD acrylic narrow angle light pipe FEA model 60
43. NRaD acrylic narrow angle light pipe minimum principal stress contours at 1000 psi 61
44. NRaD acrylic narrow angle light pipe maximum principal stress contours at 1000 psi 61
45. Stem/head junction crack in NRaD light pipe subjected to 20,000 psi pressure at 70°F, view 1 62
46. Stem/head junction crack in NRaD light pipe subjected to 20,000 psi pressure at 70°F, view 2 62
47. Hellium leak test fixture for qualification/acceptance of NRaD light pipe assembly (sheet 1) 63
48. Hellium leak test fixture for qualification/acceptance of NRaD light pipe assembly (sheet 2) 64
49. Helium leak test chamber details 65
50. Quality control pressure test setup 66
51. Quality control pressure test components 66
52. Quality control pressure test axial displacement measurement setup 67
53. Head detail of light pipe S/N 60 subjected to CPP test 68
54. Head detail of light pipe S/N 61 subjected to CPP test 68

Table

1. Stress resulting from 1000-psi pressure loading 14

INTRODUCTION

A hyperbaric chamber is an enclosed vessel that is subjected to an internal pressure greater than the external pressure that acts on the vessel (the external pressure is often ambient atmospheric pressure). Man-rated hyperbaric chambers are used for compression and decompression of saturation divers; as recompression chambers for treating physiological problems resulting from diving, diving simulation, and testing; and for practicing hyperbaric medicine. See reference 5 for examples of hyperbaric facilities. Human-occupied hyperbaric chambers require interior illumination. A well-lit chamber provides a comfortable environment for its occupants and also allows them to pursue recreational, training, or work activities while within the chamber. Proper chamber illumination avoids subjecting the occupants to the psychological pressure and sensory deprivation that occurs from being encapsulated in a darkened, claustrophobic environment. In addition, adequate lighting allows operators working on the outside of the chamber to monitor the well-being of those within the chamber.

Hyperbaric chambers can take many forms, including portable fabric chambers with windows sewn in place for transportation of recompression patients or transparent acrylic tube monoplace chambers used in hospitals for medical treatment. Both of these types of chambers are intended for a single occupant who typically lies flat while inside the chamber. Larger hyperbaric facilities that provide enough room for more than one occupant to move about the interior of the chamber typically consist of one or more cylindrical metallic vessels that have windows located at appropriate locations in the chamber wall. For portable or transparent monoplace chambers, interior illumination is less of an issue than it is for larger metallic chambers. This report discusses hardware that can be used for the interior illumination of these large metallic chambers.

There are several ways to light the interior of these larger hyperbaric chambers. The most obvious way is to use viewport windows to let in natural light or to arrange viewports so that artificial light can be shined through them. Since viewports are used extensively in hyperbaric chambers to provide the operators with a view of the occupants, it is often convenient to use them for interior illumination of the chamber. If the chamber is used outdoors, a sufficient number of viewports can be provided to give adequate illumination during the daylight hours by natural light. However, many chambers are not outside, nor are they used exclusively during the day. Therefore, provision must be made for obtaining artificial lighting through chamber viewports or by some other means.

Two translucent materials are readily available for the manufacture of hyperbaric chamber windows. Glass was originally used, either tempered or laminated. The advantage of glass is that it is a familiar optical material with excellent light transmission properties. Numerous glass compositions such as borosilicate glass and soda lime glass exist and could be used to manufacture windows. In general, the greatest disadvantage of glass is, that because of its brittle nature, the structural behavior of glass can be unpredictable. For the safety of chamber occupants, it is absolutely critical that the integrity of the pressure boundary, including viewports, be maintained while the chamber is in service. For this reason, glass windows are not currently approved for man-rated hyperbaric chambers by recognized safety standards such as the American Society of Mechanical Engineers Safety Standard for Pressure Vessels for Human Occupancy, ASME–PVHO-1 (reference 2).

The other material readily available for manufacturing windows is acrylic plastic. Its advantages are that it is a relatively inexpensive material, it has good light transmission properties, and its structural behavior is repeatable and therefore predictable. Acrylic plastic can tolerate point loading caused by local irregularities in the viewport seating surface. Whereas local surface irregularities can cause initiation of cracks in glass, acrylic plastic will locally deform to accommodate surface imperfections. This fact makes acrylic a more desirable material for use in the manufacture of

windows and is the material of choice for windows in hyperbaric chambers. Consequently, acrylic plastic is specified by most safety standards for construction of pressure-resistant windows for man-rated pressure vessels. Acrylic's reproducible physical properties and tolerance to seating imperfections allow the viewport designer to predict the structural performance of the window with confidence:

1. The short term implosion pressure of the acrylic window can be determined in advance on the basis of existing analytical calculations, or empirical data.
2. The time-dependent implosion of the acrylic window at any pressure can be determined in advance on the basis of empirically generated linear curves plotted on log-log coordinates of implosion pressure versus duration of loading.
3. The crack-free cyclic fatigue life of the acrylic window is in excess of 10,000 pressurizations, if the maximum service pressure on the window is less than 25 percent of the short-term implosion pressure, and the relaxation periods between individual pressurizations equal, or surpass, the duration of individual pressurizations.
4. The effect of temperature on implosion pressure of the acrylic window can be determined in advance on the basis of empirically generated plots that relate temperature to implosion pressure.

Besides glass and acrylic, other available transparent plastics such as polycarbonate and polystyrene have not seen widespread use in the fabrication of hyperbaric windows (although polycarbonate is an acceptable material for fabricating electrical, mechanical, optical, or hydraulic penetrators in acrylic windows per reference 2).

The two most common shapes for acrylic hyperbaric chamber windows are plane disc and conical frustums; see figure 1. Both shapes, if made from acrylic, have been approved per reference 2 for use in hyperbaric chambers. Both of these shapes require that the chamber be fitted with flanges welded to the chamber walls that not only reinforce the chamber walls around penetrations for the viewports but also provide a seating and retaining arrangement for the window itself.

In addition to natural lighting of the chamber's interior through viewports, it is also possible to use viewports in conjunction with an artificial light source to illuminate the interior of a chamber. Reference 4 provides several externally generated light (EGL) systems designed to be used with existing viewports for chamber interior illumination. Glass would be the ideal material for such windows if it were not for its structural deficiencies. Glass is not particularly sensitive to the heat generated by artificial lights. Acrylic, on the other hand, must be used carefully with artificial lights when the lights are mounted close to the viewport. The structural properties of acrylic are very temperature sensitive and can be significantly degraded by the heat generated from a nearby incandescent light source. If the light source is placed too close to the acrylic window, the window surface could craze/crack or bubble, or even worse, begin to creep under the combined effects of pressure loading and elevated temperatures. If thermal damage of the window is significant enough to jeopardize the integrity of the pressure boundary, the consequences could be catastrophic to the occupants of the chamber. To prevent this, some system of cooling the acrylic window must be used. Either the light source is placed such that natural convection disperses the heat, or a more sophisticated system that uses some combination of forced convection, infrared filters, and/or dichroic mirrors is used.

Reference 2 provides specific instruction on how to size the window to accommodate the use of acrylic windows to illuminate a chamber interior with an external incandescent light source. Reference 2 requires the use of increased safety factors (conversion factors) to size the window, with the

caveat that the viewport designer ensure that the incandescent light source shall under no conditions raise the temperature of the acrylic window above 150°F.

Most hyperbaric chambers use viewports solely for the purpose of making visual contact between the occupants inside and the operators on the outside. If the chamber is to also rely on the illumination of its interior by natural or artificial light through viewports, additional large viewports would be required. The increase in the number of viewports can significantly increase the cost of the hyperbaric chamber. And, unless given careful consideration, viewports may result in inefficient use of the external light source and may not provide adequate illumination of the chamber interior. Because of the safety risk, increased cost, and poor performance associated with using viewports in conjunction with incandescent lights, other means of hyperbaric chamber illumination have been developed.

Another method for illuminating the interior of a hyperbaric chamber is to locate electric- or battery-powered lights inside the chamber. There are, however, shortcomings with this approach. The transparent covers of interior lights are subjected to the operating pressure that exists within the chamber. These transparent covers must be made from glass, as acrylic cannot withstand the heat generated from a nearby incandescent light source. But, as mentioned previously, glass is not recognized as an acceptable pressure-bearing material for man-rated hyperbaric chambers by most safety standards. If interior lights are powered electrically, the additional expense and safety issues of pressure-resistant electrical penetrators that can supply power to interior lights through the chamber wall must also be considered.

The primary reason, however, that electric lights installed directly inside the chamber are not used is that the electricity itself presents serious shock and fire hazards to the occupants of the chamber due to the combination of the breathing gasses and high pressures used in modern hyperbaric chambers. The fire hazard, in particular, increases as the operating pressure inside the chamber is elevated. In addition to shock and fire hazards, battery-powered lights can present problems if off-gassing from the batteries contaminates the environment inside the chamber.

None of the approaches to illuminating the interior of man-rated hyperbaric chambers discussed thus far are entirely adequate. The ideal illuminator for a hyperbaric chamber should have the following characteristics:

1. The transparent pressure boundary of the lighting system is constructed from a material whose structural performance can be predicted with absolute confidence.
2. The method of lighting does not interfere with the use of viewports available for visually monitoring the well-being of the chamber's occupants.
3. The lighting system uses some form of externally mounted artificial illumination that can provide adequate lighting of the chamber's interior independent of any natural light that may be available.
4. Failures of the artificial light source or light source cooling systems do not compromise the integrity of the pressure boundary of the light system.
5. The light system does not under any circumstances present any type of environmental hazard to the occupants of the chamber. These hazards include fire, electrical shock, and contamination of the breathing gasses used in the chamber.
6. The light system assembly is cost effective and allows easy replacement of the light source as needed without impacting the chamber's occupants.

7. The design of the light system should be recognized by safety standards such as ASME–PVHO–1 (reference 2) that govern human-occupied pressure vessels such as hyperbaric chambers.

A hyperbaric chamber lighting system patented in 1974 (expired in 1991; see reference 3) offers an approach to interior illumination that meets most of the seven characteristics listed above. This approach consists of installing metallic adapters that capture acrylic light pipes in appropriately positioned pipe-sized penetrations in the hyperbaric chamber wall, as shown in figures 2 through 4. The acrylic light pipe conducts a focused beam of light from an externally mounted incandescent light source to the interior of the pressurized chamber. The acrylic light pipe itself consists of a pressure-bearing conical frustum-shaped head with an integrally attached stem.

Since this illuminator uses an externally mounted electrical light source, the environmental hazards inside the chamber created by a malfunctioning lighting system have been totally eliminated. In addition to being an optical conduit of light, the stem of the acrylic light pipe also provides a fail-safe stand-off between the incandescent light source and the load-bearing conical frustum head of the light pipe. In case of light source cooling system failure, the inlet end of the light pipe stem may overheat, but the head of the light pipe remains insulated from overheating by the length of the light pipe stem coupled with the acrylic's relatively poor thermal conductivity.

Only one of the seven desirable characteristics listed above is not achieved by the light pipe concept. Light pipe designs are not currently recognized by safety standards that govern other aspects of hyperbaric chamber design, such as the plane disc and conical frustum-shaped acrylic windows discussed previously. Although acrylic light pipes are currently employed in large numbers of government and private hyperbaric chamber facilities, the extensive environmental testing required to incorporate light pipes into these safety standards has never been pursued by the users or fabricators of light pipes.

BACKGROUND

Although in widespread use in the U.S. Navy community, commercially available light pipe systems do not completely meet the U.S. Navy's needs for performance and material control. This report documents the design, manufacture, and testing of light pipes that eliminate deficiencies with commercially available light pipe hardware. Figure 5 shows the cross-section of two commercially available light pipes for narrow and wide angle illumination. These light pipes are available from J.M. Canty Associates Inc. and are designated as parts HYL–LP–FLEX and HYL–LP–WBX. The following list addresses the issues that were considered in the development of new light pipe hardware for 1000 psi, 150°F service in U.S. Navy man-rated PVHOs that replace the existing commercial light pipe assemblies shown in figure 5.

1. Design the new light pipes to increase the amount of light that passes from the incandescent light source through the light pipe to the chamber's interior to provide improved lighting of the chamber. This also allows the new light pipe to be used with an existing commercial light source (J.M. Canty Associated Inc. HYL–250–LS–DP) while operating the light source at a lower voltage than would be required to achieve the same level of lighting with commercial light pipes. In some instances, lighting from commercial hardware was only found to be adequate when the incandescent light source (J.M. Canty Associates Inc. HYL–250–LS–DP) was operated at full power (250 watts, 24 VDC). Operating the commercial light source at full power is undesirable because it results in an unacceptably short life of the light source lamp.

2. Improve design and manufacturing features of the new light pipe to eliminate material damage observed in commercial acrylic light pipes as a result of their extensive service in U.S. Navy hyperbaric chambers. Material damage in commercial acrylic light pipes in the form of crazing, cracking, and permanent deformation has been discovered with light pipes that were in service for a period of approximately 4 years. Figures 6 through 8 show photographs of acrylic light pipes that exhibit severe crazing and cracking on the surface of the light pipe stem and on the conical and cylindrical bearing surfaces of the conical frustum head. Figures 9 and 10 show detail of the damage found on two of the light pipe stems. Figures 11 through 13 show details of the damage in the vicinity of the light pipe head. In addition to crazing and cracking, permanent deformation in the form of a circular groove on the cylindrical surface of the light pipe head was found. Crazing of acrylic and similar translucent plastics requires the presence of surface tensile stresses. The surface tensile stresses may arise from an applied load, a temperature differential across the thickness of the acrylic member, or residual stresses induced by manufacturing such as surface machining. Exposure to weathering (ultraviolet light) and/or organic solvents can further accentuate crazing of plastics like acrylic (reference 17).

   The crazing and cracking found on the stem of the acrylic light pipes appears to have been caused by a combination of improper thermal annealing of the light pipe after manufacture, extensive thermal fatigue, and exposure to ultraviolet light from the incandescent light source. The ultraviolet radiation emanating from the commercial light source used with these light pipes is on the order of 2 percent of lamp wattage. For the 250-watt lamp employed in the light source, this equates to a significant 5 watts of ultraviolet light (reference 6). The crazing and cracking damage found on the conical frustum head of the acrylic light pipe appears to be caused by a combination of improper thermal annealing of the light pipe after manufacture, surface shear stresses present on the conical bearing surfaces during pressure loading (reference 16), and severe dimensional mismatches between the bearing surfaces of the light pipe head and the mating bearing surfaces of the stainless steel (CRES) light pipe adapter that could

induce tensile surfaces stresses while in service. The circular region of permanent deformation on the light pipe head appears to be due to accidental overheating of the light pipe, resulting in slight extrusion of the light pipe head into the radial O–ring gland machined in the CRES light pipe adapter.

None of this observed surface damage represents an immediate threat to the structural integrity of the light pipe at the operating pressures and temperatures for which it was intended. However, the surface damage degrades the optical performance of the light pipe and could, if it worsens over time, structurally weaken the light pipe.

3. Reduce the number of required light pipe assembly parts by designing the new CRES light pipe adapter to accommodate either a narrow angle or wide angle acrylic light pipe. Commercial metallic light pipe adapters differ depending on the style of light pipe used.

4. Design the new light pipe to eliminate the setscrew used to retain the acrylic light pipe within the CRES light pipe adapter in commercial hardware. Figure 14 shows permanent deformation resulting from the setscrew impinging into the surface of a light pipe that has been removed from service. The dimples caused by the setscrew could become a potential crack initiation source as the light pipe is subjected to continued cyclic pressure and temperature loading while in service.

5. Approve the new light pipe design for service in man-rated U.S. Navy hyperbaric chambers by completing required qualification/acceptance environmental tests. U.S. Navy qualification/acceptance tests shall consist of temperature monitoring of the acrylic light pipe under normal service conditions, pressure testing, shock testing, and helium leak testing. Temperature and pressure testing shall be based on the requirements of reference 2. Shock testing shall be based on the requirements of MIL–S–901 (reference 11). The manufacturers of commercial light pipe hardware have not performed qualification/acceptance environmental tests to approve their use by the U.S. Navy community. The U.S. Navy has itself performed some environmental tests of commercial light pipe assemblies prior to placing the hardware into service.

6. Ensure all pressure boundary components of the new light pipe assembly meet the U.S. Navy's material control requirements as defined by paragraph 3.3.1, Material Control Division A of NAVSEA SS800–AG–MAN–010/P–9290 (reference 15). The manufacturers of commercial light pipe hardware do not attempt to meet the material control requirements the U.S. Navy has established for deep submergence system hardware such as light pipes.

7. Complete pressure testing of the new light pipe required by paragraph 2–2.6 of reference 2 in order to consider adoption of the light pipe design into this safety standard. The design and manufacture of light pipe hardware is not currently governed by ASME safety standards for human-occupied pressure vessel hardware (reference 2).

OPTICAL DESIGN

Figures 15 and 16 show the components that comprise the new narrow angle and wide angle light pipe hardware designed by NRaD. The light pipe assembly consists of a CRES adapter that captures either a narrow or wide angle acrylic light pipe. A CRES threaded retainer ring secures the acrylic light pipe in the CRES adapter. A custom spanner wrench tightens the CRES threaded retainer. Two external O–rings provide a radial and face seal between the CRES adapter and the mating pipe-sized penetration in the hyperbaric chamber wall. Engineering drawings of each of the light pipe components are shown in figures 17 through 19. The light pipe assembly engineering drawings are shown in figures 20 and 21, and the custom spanner wrench is shown in figure 22.

Figures 23 and 24 show side-by-side comparisons of the cross-sectional shape of the commercial and NRaD designs for narrow angle and wide angle illumination. The terms narrow angle and wide angle refer to the light pipe illumination output angle inside the hyperbaric chamber. Narrow angle illumination is achieved by the focusing of a clear convex spherical exit face on the conical frustum head of the light pipe head. Wide angle illumination is achieved through the emanation of light from a clear flat exit face on the light pipe conical frustum head. The NRaD light pipe assembly was designed to be assembled in the same hyperbaric chamber pipe-sized penetrations (1.25-inch nominal diameter through), as used with commercially available light pipes. Additionally, the NRaD light pipe assembly maintains the same features that are required for mounting and interfacing with commercially available light sources on the exterior of the chamber. The significant new features of the NRaD light pipe design are the divergent conical stem (i.e., the exit aperture of the stem at the light pipe head is greater than the entrance aperture adjacent to the incandescent light source) and the increased size (i.e., light exit area) of the light pipe conical frustum head. By comparison, the commercial light pipes shown in figures 23 and 24 use a cylindrical stem and a smaller conical frustum-shaped head.

The use of a divergent stem increases the acceptance angle of the illumination entering the NRaD light pipe and therefore allows more light flux to be transmitted. The included angle selected for the conical divergent stem was the largest that could be used given the constraint of the fixed through diameter of existing light pipe penetrations in the hyperbaric chamber wall. As with the commercial units shown in figures 23 and 24, the NRaD light pipes are machined from a single piece of acrylic stock so that the stem is integrally attached to the conical frustum head. Some commercially available acrylic light pipes are two-piece assemblies consisting of an acrylic stem that butts up to a separate acrylic conical frustum-shaped head. Using a one-piece assembly offers several advantages. Reflection of light at the interface boundary between the head and stem of a two-piece assembly would lead to a loss of transmitted light. Reflection of light at the interface boundary between the stem and head will also lead to increased local heating in this vicinity, which is undesirable because of the effects of higher temperatures on the structural integrity of the load-bearing conical frustum head of the light pipe. If, over time, dust or other debris is trapped at the interface between the stem and head of a two-piece light pipe assembly, the potential for further light loss and additional local heating would increase.

The design of the conical frustum head was selected with the aid of ray tracing once the divergent stem was defined. The angle of illumination achieved by the narrow angle light pipe configuration is a function of the spherical radius of the exit face and the distance of the exit face from the light pipe stem exit aperture. For wide angle illumination, the critical angle of incidence for the flat exit face is 42.12°, which equals the angle of incidence that, if exceeded, results in total internal reflection. The shape of the light pipe head is selected to ensure that its thickness is not so great as to restrict the usable 95.76° cone of flux exiting from the light pipe stem exit aperture. In addition to optical

considerations, the thickness and shape of the light pipe head were also driven by structural considerations as will be discussed later in this report. The frosted exit face of commercial wide angle light pipes achieved by grit blasting or sanding the acrylic was not used on the NRaD wide angle light pipes. Although frosting the exit surface in this fashion does lead to more even light transmission over the whole angle of illumination, it is achieved at the expense of blocking a significant portion of the light flux.

Figures 25 and 26 show comparisons of the light transmission characteristics of NRaD and commercial light pipe designs for narrow and wide angle cones of illumination. These figures compare the relative light intensities of the narrow and wide angle configurations as a function of the light angle relative to the light pipe centerline. Given that the total flux of light exiting the light pipe is proportional to the area under each of the curves shown in figures 25 and 26, it is clear that the NRaD designs have resulted in significant improvements in the amount of light that is being transmitted. Each of these comparison curves was generated using the same light source, the J.M. Canty Associates, Inc., drip-proof 250-watt, 24-VDC tungsten halogen lamp with an integral dichroic reflector, HYL 250–LS–DP. The HYL 250–LS–DP contains an infrared-absorbing glass filter positioned between the lamp and entrance aperture of the acrylic light pipe stem. This light source unit also contains a thermal switch for overheating protection along with a small 110-VAC fan for cooling.

MECHANICAL DESIGN

The design and documentation of the new NRaD narrow and wide angle light pipe contains several features intended to eliminate some of the deficiencies found in commercially available light pipe hardware. Dimensioning and tolerancing in accordance with reference 1 was used in the light pipe engineering drawing package (see figures 17 through 22) to ensure interchangeability between all components of the new light pipe assembly. Difficulties in assembling commercial light pipe hardware have occurred because not all acrylic light pipes fit into all CRES light pipe adapters. In other instances, poor fit-up of some of the commercial light pipe assemblies likely contributed to the crazing and cracking damage shown in figures 11 through 13. A poor match of angles between the conical bearing surfaces of the acrylic light pipe head and the conical seat of the CRES light pipe adapter could place the light pipe head into additional flexure while in service, resulting in tensile stresses on the conical surface of the acrylic light pipe. The presence of surface tensile stresses over repeated pressurizations is likely a major contributor to damage witnessed in certain commercial light pipes removed from service. Consequently, the engineering drawings of the new NRaD light pipe and light pipe adapter require that the angle of the conical bearing surface of each of these parts be machined to tight tolerances (to within a range of $0°15'$ of nominal) for a good fit-up during assembly.

As stated earlier, the NRaD CRES light pipe adapter was designed to interface with existing pipe-sized chamber penetrations used for commercial light pipe hardware as well as commercially available light sources, light diffusers, and fiber optic flex pipes. This allows a one-for-one replacement of commercial hardware with the NRaD light pipe assembly with minimal impact to the existing chamber. The seal between the penetration in the chamber wall and the CRES adapter is maintained by face seal and radial seal glands machined into the adapter for 1/8-inch nominal O–ring sizes 2–214 and 2–223. A single light pipe adapter was designed to replace two different commercial adapter styles used for either narrow angle or wide angle illumination. This feature reduces the number of different parts required to outfit a chamber. The head of the new CRES adapter is machined with a 2.250–16UN–2A male thread to provide a means of attaching light diffusers or fiber optic flex pipes to the light pipe assembly head in the chamber's interior.

The primary seal between the CRES adapter and the acrylic light pipe in the NRaD design is achieved via a radial face gland machined into the adapter for acceptance of a 3/32-inch nominal O–ring size 2–129. The use of this sealing arrangement requires a nominal diametrical clearance of 0.002 inch between the mating cylindrical sections of the adapter seat and the light pipe head. Commercially available light pipe assemblies use a smaller 1/16-inch nominal O–ring for their primary seal. The NRaD design uses a larger O–ring size to obtain a better seal by taking advantage of the space available in the new adapter design for a machining of a larger O–ring gland. The secondary seal between the CRES adapter and the acrylic light pipe is made by the contact of conical bearing surfaces of the adapter and light pipe while in service.

The light pipe is secured in the light pipe adapter via a CRES retaining ring that threads into the light pipe adapter. The retaining ring clamps the light pipe in place via contact between mating 15° bevels machined into the retainer and the head of the light pipe. Under normal service, the light pipe is secured in place by the internal pressure within the chamber. The retainer is only required to hold the light pipe in place in cases of shock loads or instances when the external pressure acting on the chamber exceeds the pressure within the chamber. The threaded retainer is used in lieu of setscrews that secure the light pipe within the adapter in commercial hardware. This eliminates the damage witnessed with commercial hardware as shown in figure 14 resulting from the setscrew cup point impinging into the cylindrical surface of the light pipe head. Although the CRES retaining ring is

assembled with an anti-seize compound, further prevention of galling between the CRES retaining ring and CRES adapter could be achieved by fabricating the retaining ring from a different material such as bronze, k–monel, or harder stainless steel alloys such as the precipitation-hardened materials.

STRUCTURAL DESIGN

The design of the load-bearing head of the NRaD light pipes was driven by optimizing optical performance and then checking to ensure that the resulting design was also structurally adequate for 1000-psi, 150°F service in man-rated PVHOs. The shape of the NRaD light pipe head is analogous to acrylic conical frustum windows used widely in viewports for submersibles and hyperbaric chambers. The difference between NRaD's acrylic light pipes and a standard acrylic conical frustum window shape with an included conical bearing surface angle of 90° is the presence of an integrally attached stem. The first approach used for checking the structural integrity of the NRaD light pipe designs was to perform a hand calculation comparison of the geometry of the light pipe conical frustum head with the required geometry of an equivalent conical frustum window designed per reference 2 for 1000-psi, 150°F service.

Per paragraph 2–2.3 of reference 2, the design of an acrylic conical frustum window is to be based on the design pressure (P) of the window, a conversion factor (CF) based on the maximum ambient temperature that the window will be subjected to once in service, and design curves that plot the experimentally generated short-term critical pressure (STCP) of the window as a function of the window geometry. The STCP of an acrylic window is defined as the hydrostatic pressure required to catastrophically fail a window at ambient room temperature (70°F to 77°F) while the window is pressurized at an approximate rate of 650 psi/min. Window geometry for most standard shapes covered by reference 2 is defined by the thickness-to-diameter ratio (t/Di) of the window. The t/Di of an acrylic window design is selected per reference 2 by requiring that the corresponding STCP of the window is greater than or equal to the product of the conversion factor and the design pressure ($CF \times P$).

For windows used in conjunction with incandescent light sources, paragraph 2–2.4.1(b) of reference 2 states that 150°F shall be the ambient temperature value used to select the CF for designing the window. Based on this design temperature, a CF equal to 16 is required for an acrylic conical frustum window designed for 1000 psi per table 2–2.2 of reference 2 which gives $CF \times P$ equal to 16,000 psi. The t/Di of an acrylic conical frustum window with an STCP equal to 16,000 psi is equal to approximately 0.5 per figure 2–2.9 of reference 2. Therefore, the t/Di should be greater than or equal to 0.5 for an acrylic conical frustum window with an included conical bearing surface angle of 90° designed for a 1000-psi, 150°F service environment.

By comparison, the t/Di ratio of the NRaD wide angle acrylic light pipe conical frustum head (from figure 18) is equal to (0.563 inch + 0.379 inch)/(0.802 inch), which equals 1.17. The t/Di of the NRaD light pipe head is therefore over twice as thick as would be required by reference 2 for an acrylic conical frustum window designed for the same pressure and temperature service. Although the geometry of the NRaD light pipe is not strictly a cone, the cylindrical O–ring sealing surface and the 15° bevel that mates with the CRES retaining ring are similar to design modifications to conical frustum windows allowed by reference 2. Paragraph 2–2.11.11 of reference 2 states that the edge of the bearing surface adjacent to the high-pressure face of the window can be beveled for interfacing with seals as long as the bevel does extend beyond half the window thickness from the high-pressure face.

The second approach for evaluating the structural performance of the NRaD light pipe designs was to perform a computer-aided finite element analysis (FEA) comparison of the light pipes and an equivalent conical frustum window designed per reference 2 for 1000-psi, 150°F service. Evaluation of FEA-generated stress plots of pressure-loaded acrylic shapes requires the use of a criteria that also considers the effects of time and temperature on the structural integrity of the acrylic part.

Because of the complicated nature of such a criteria, the structural design of acrylic windows is typically based on experimental data, and FEA is used only as a tool to provide insight on the structural behavior of the window design. Thus, stress results presented in this report are not evaluated by comparison to a failure criteria for acrylic, but by comparing stress results in new acrylic shapes (NRaD light pipes) to stress results in an established acrylic shape (conical frustum window) with a long history of success.

Two-dimensional (2–D) axisymmetric models were constructed of an acrylic conical frustum window (t/Di = 0.5), an NRaD wide angle light pipe with and without the stem attached, and an NRaD narrow angle light pipe for the purpose of comparing the stresses that exist in each of these shapes when subjected to a 1000-psi pressure differential. The FEA models were constructed using the structural analysis software ANSYS, revision 5.0A, a product of Swanson Analysis Systems, Inc. Each window shape and its mating flange or adapter were modeled using PLANE82 2–D 8-node quadrilateral solid elements with the following linear elastic-isotropic material properties (references 2, 8, 14, and 16):

Acrylic:	E = 450,000 psi v = 0.35 Ultimate Tensile Strength = 9000 psi minimum Compressive Yield Strength = 15,000 psi minimum
CRES 316L (Cond. A)	E = 28,000,000 psi v = 0.27 Yield Strength = 30,000 psi minimum Ultimate Tensile Strength = 75,000 psi minimum

where E is the elastic modulus and v is the Poisson's ratio of each material.

Figure 27 shows the FEA model constructed to calculate the stresses that exist in an acrylic conical frustum window (t/Di = 0.5) at 1000 psi. A log of the ANSYS commands used to construct this model is provided in appendix A. The interface between the window and the steel flange was modeled by coupling the nodes on the bearing surfaces of the window and flange together in the direction normal to the bearing surface. This allows for normal contact and also assumes frictionless sliding between the bearing surfaces of the two materials in directions tangential to the bearing surface. In reality, friction will exist between the two bearing surfaces when under load, but modeling this interface as a free-sliding boundary has been shown to give a better approximation of the resulting stress state in the window than if it were model as a fixed (high-friction) boundary (reference 16).

Figure 28 shows an exaggerated plot (displacements have been scaled up by a factor of 30) of the conical frustum window's (t/Di = 0.5) deflected shape when subjected to a 1000-psi pressure differential. The deflected shape plot shown in figure 34 indicates that concave flexure of the window will occur during pressurization that results in very high local bearing stresses at the edge of the low-pressure face (LPF). The finite element mesh used in this model has been refined (i.e., smaller elements are used) at the edge of the window LPF. A refined mesh is used at this location to better resolve the relatively high local stresses that exist in this region during pressure loading. The more the elements are refined is this region, the higher these local stresses are calculated to be. Consequently, the mesh was only refined until the point that the model calculated a peak minimum principal stress in this region that was approximately equal to the compressive yield strength of the acrylic. The idea being that once the yield strength of the material is reached, the window will locally deform

at the edge of the LPF until the stress in this region no longer exceeds the compressive yield strength of the acrylic.

Figure 29 shows the minimum principal stresses calculated for the conical frustum window at 1000 psi for the element mesh shown in figure 27. This stress contour indicates that the window experiences relatively low uniform compressive minimum principal stress everywhere except the edge of the low-pressure face, where a peak compressive stress of –16,656 psi is calculated. Figure 30 shows the maximum principal stresses calculated for the conical frustum window at 1000 psi. Figure 31 shows detail of the maximum principal stress contours in the vicinity of LPF edge. Figure 31 indicates a maximum principal stress of +1347 psi in the window at the outer edge of the LPF as a result of a Poisson's induced bulge caused by the locally high adjacent compressive stresses in the window at the edge of the conical bearing surface.

The second FEA model constructed was of the NRaD wide angle light pipe, minus the divergent conical stem, mounted in its mating CRES adapter as shown in figure 32. The interface between the acrylic light pipe head and the CRES adapter was modeled using CONTAC12 2–D point-to-point gap elements. These elements allow adjacent surfaces to maintain or break physical contact and allow one surface to slide relative to the other surface. The use of these gap elements introduces nonlinearities to the stress analysis and, therefore, requires that an iterative solution be used with running the FEA model. Relatively soft elastic longitudinal spring elements, CONBIN14s, were superimposed over the gap elements to add stability to this iterative process, and thus speed up the rate of convergence. To compare the stresses calculated for the wide angle light pipe head with those calculated for the conical frustum window (t/Di = 0.5) discussed above, the same mesh refinement in the vicinity of the LPF of the light pipe head was employed as used with the conical frustum window. The ANSYS command log used to construct this FEA model is provided in appendix B.

Figures 33 and 34 show the resulting minimum and maximum principal stresses calculated for the NRaD wide angle light pipe head (without the stem) when subjected to a pressure differential of 1000 psi. Figure 35 shows the detail of the maximum principals stress gradients in the vicinity of the LPF edge. A peak minimum principal stress of –8259 psi is calculated to exist at the transition from the cylindrical bearing surface to the conical bearing surface. A peak maximum principal stress of +3874 psi is calculated for the LPF edge.

The third model constructed consisted of the entire NRaD wide angle light pipe (head with integrally attached stem) and is shown in figure 36. The minimum and maximum principal stresses calculated for this geometry when subjected to a 1000-psi pressure differential are shown in figures 37 through 39. A peak minimum principal stress of –8193 psi is calculated to exist at the transition from the cylindrical bearing surface to the conical bearing surface on the light pipe head. The peak maximum principal stresses occur at the transition region from the cylindrical bearing surface to the conical bearing surface on the light pipe head and the transition region from the light pipe head to the light pipe stem. A peak maximum principal stress of +3297 psi is calculated for the wide angle light pipe head configuration. The presence of the integrally attached stem has reduced the magnitude of the stresses in the transition region from head to stem of the light pipe (as shown in figure 39) when compared to stress results obtained from the FEA model run for the wide angle light pipe head alone. As expected, the light pipe stem experiences very low levels of stress as a result of the 1000-psi pressure load. Figures 40 and 41 show equivalent stress (von Mises stress) contours for the CRES adapter when subjected to a 1000-psi pressure differential. The equivalent stresses in the adapter are below 3478 psi with the exception of the locally higher stresses found at the corner where the transition occurs from the light pipe head conical bearing surface to the conical cavity for the light pipe stem (see figure 41).

Figure 42 shows the fourth and final FEA model that simulates the NRaD narrow angle light pipe configuration. The narrow angle light pipe head has the same conical and cylindrical bearing surfaces as the wide angle design, but has additional thickness due to its convex spherical exit face. The peak minimum and maximum principal stresses calculated to exist in the narrow angle design for a pressure differential of 1000 psi are shown in figures 43 and 44. The peak minimum and maximum principal stress values of –8180 psi and +3292 are essentially unchanged from those found to exist in the wide angle light pipe configuration under the same pressure loading.

The state of stress resulting from a 1000-psi pressure loading is summarized in table 1 for each of the four FEA models described above:

Table 1. Stress resulting from 1000-psi pressure loading.

STRESS COMPONENT				
Acrylic Shape	**Min. Principal (psi)**	**Peak Min Principal (psi)**	**Max Principal (psi)**	**Peak Max Principal (psi)**
Conical Frustum Window (t/Di=.5)	-1337 to -3140	-16,656	+196 to -1185	+1347
Wide Angle Light Pipe (w/o Stem)	-750 to -1633	-8259	-253 to -1103	+3874
Wide Angle Light Pipe (w/ Stem)	-323 to -1373	-8193	-338 to -999	+3297
Narrow Angle Light Pipe	-318 to -1367	-8180	-341 to -1002	+3292

The minimum principal stress and maximum principal stress columns in table 1 refer to the range of stress calculated for each shape throughout the majority of its volume. The peak minimum principal and peak maximum principal stress columns refer to peak stress values calculated for each shape.

From table 1, the magnitude of the minimum principal stresses calculated for the load-bearing head of the light pipe is less than half the magnitude of minimum principal stresses calculated for a conical frustum window designed for 1000-psi, 150°F service (t/Di = 0.5). The relatively lower minimum principal stresses in the light pipe head are to be expected given that the t/Di ratio of the light pipe head is over twice that of the conical frustum window designed for the same maximum operating pressure and temperature. The peak minimum principal stresses in the light pipe head are calculated to exist at the corner where the cylindrical bearing surface transitions to the conical bearing surface.

The peak maximum principal stress calculated for the light pipe FEA models are over twice as high as those calculated for the conical frustum window FEA model for the same pressure loading (1000 psi). The difference in the magnitude of maximum principal can be attributed to the difference in the seat cavity interface between the acrylic shape and the steel flange for the conical frustum window and light pipe FEA models. For the conical frustum window, the diameter of the LPF of the window (inner diameter, Di) is larger than the through diameter of the steel flange (Df) so that conical bearing surface of the window does not overlap the conical bearing surface of the steel flange as required per paragraph 2–2.10.1 of reference 2. For the wide angle and narrow angle light pipe designs, the conical bearing surface of the acrylic overlaps the conical bearing surface of the steel adapter near the exit aperture of the acrylic light pipe stem. Thus, the conical bearing surface of the

acrylic light pipe spans the corner of the steel adapter where the adapter transitions from a conical bearing surface for supporting the light pipe head to the conical cavity for the acrylic light pipe stem. This overlap of the acrylic light pipe bearing surface leads to pressure-induced tensile stresses (maximum principal stresses >0) adjacent to the region of contact between the acrylic light pipe conical bearing surface and the internal corner of the steel adapter that are over two times greater than the peak tensile stresses found in the conical frustum window analysis. Breaking the internal corner of the steel adapter with a 0.015-inch radius and adding a matching 0.015-inch fillet to the acrylic light pipe and the head/stem transition could help reduce the magnitude of the locally high stresses found in this region.

The third and final approach to verifying the structural integrity of the NRaD light pipe designs was to conduct experimental pressure tests on prototypes of the light pipe hardware. The pressure testing was performed by Stachiw Associates of El Cajon, CA and involved subjecting light pipes to increasing levels of pressure for several minutes followed by depressurization and inspection of the acrylic light pipes for structural damage. These short-term pressure tests were conducted at 75°F and the first visible damage of a light pipe was detected at an experimental test pressure of 20,000 psi equal to 20 times the intended design pressure of the NRaD light pipes (1000 psi). Figures 45 and 46 show details of this damage, which consisted of a circumferential crack that initiated at the transition between the light pipe head and the light pipe stem and propagated radially inward toward the light pipe center line. The crack shown in figures 45 and 46 initiated in a location where the FEA light pipe models predicted that tensile stresses would exist. Increasing the pressure loading above 20,000 psi would likely lead to an eventual complete separation of the light pipe head and its stem, but this event would not lead to catastrophic failure of the light pipe.

A comparison of the cross sections of commercial light pipes and the NRaD light pipes (figures 23 and 24) indicates that not only does the divergent conical stem lead to improved optical performance, but it also significantly improves the light pipes' resistance to catastrophic failure. Catastrophic failure of the commercial light pipe would require either shearing and/or extrusion of the light pipe head through the exit aperture of the CRES adapter. Catastrophic failure of the NRaD light pipe would require either shearing and/or extrusion of <u>both</u> the light pipe head and the light pipe stem through the entrance aperture of the CRES adapter. On the basis of these hand calculations, FEA analysis, and experimental pressure testing, the NRaD light pipes were deemed more than adequate for their intended operational environment of 1000 psi and 150°F.

QUALIFICATION TESTING FOR U.S. NAVY SERVICE

Once the optical, mechanical, and structural design features discussed above were incorporated into the final design of the NRaD light pipe hardware, a specification for qualifying the new design for use by the U.S. Navy community was completed (appendix C). The intent of this qualification/acceptance specification was to ensure the light pipe assembly could withstand selected environmental tests that relate to the light pipe hardware's in-service condition. Prior to the NRaD light pipe hardware being accepted for service in U.S. Navy man-rated hyperbaric chambers, qualification/acceptance testing consisting of temperature monitoring, hydrostatic pressure testing, shock testing, and helium leak testing had to be successfully completed.

The qualification temperature monitoring tests consisted of measuring the temperature of the conical frustum head of the narrow angle and wide angle light pipes under normal operation of the J. M. Canty Associates, Inc., 250-watt, 24-VDC tungsten halogen lamp light source, HYL 250–LS–DP. The temperature of the conical frustum head during this test was not to exceed ambient room temperature by more than 50°F, given a maximum ambient room temperature of 100°F. This temperature differential was based on the requirements of paragraph 2–1.3(a) of reference 2 that states that the temperature of acrylic windows should not exceed 150°F while in service in PVHOs. Requirements for performing the temperature monitoring test are defined in appendix C. The temperature at the conical bearing surface of both the narrow angle and wide angle light pipe head were found to measure 20.7°F above ambient room temperature under normal operation of the HYL 250–LS–DP at 24 VDC during testing performed at NRaD. Consequently, the NRaD light pipe designs were considered to have successfully met the requirements of the temperature monitoring test.

Qualification pressure testing of the new NRaD light pipe designs were based on the requirements of paragraph 2–2.5.2 for short-term critical pressure (STCP) tests and paragraphs 2–2.6.4 for short-term proof pressure tests (STPP) of reference 2. STCP testing requires a demonstration that five light pipes can withstand in excess of 16 times the 1000-psi design pressure at 75°F. STPP testing requires a demonstration that five light pipes can withstand in excess of four times the 1000-psi design pressure at 150°F. These tests are intended to prove that the new NRaD light pipe design are adequate for service in man-rated hyperbaric chambers, providing that the working pressure does not exceed 1000 psi and that the temperature of the conical frustum head of the acrylic light pipe does not rise above 150°F. Requirements for performing the STCP and STPP tests are defined in appendix C. The NRaD light pipe designs survived the STCP and STPP test without catastrophic failure of any signs leakage and consequently were considered to have successfully met the requirements of the hydrostatic pressure tests. STCP and STPP tests were performed by Stachiw Associates at their facility in El Cajon, CA.

Qualification shock testing of the new NRaD light pipe designs was to be based on the requirements of reference 11, Grade B criteria. This test is required to ensure that no loss of pressure occurs through the light pipe assembly as a result of a shock event and ensures that all components of the light pipe assembly remain securely founded to avoid becoming projectile hazards in the case of a shock load acting on the chamber. Actual shock tests were not performed because the NRaD light pipe was qualified by extension from prior shock tests performed by the U.S. Navy on commercial light pipe hardware. Paragraph 3.2 of reference 11 outlines the issues that were addressed to obtain an extension of previous shock test results to the new NRaD light pipe design.

Qualification helium leak testing of the new NRaD light pipe designs was performed to ensure that when pressurized with helium at 450 psi for a period of 24 hours, the average leakage rate of helium

through the light pipe assembly does not exceed 10^{-3} cc/sec over the course of the test. The intent of the test was to demonstrate that the interfaces between light pipe assembly components and the interfaces between the light pipe assembly adapter and the pipe-sized penetration in the chamber wall are adequately sealed to contain the pressurized breathing gases that exist in an operational hyperbaric chamber. Figures 47 through 49 show the test chamber designed, fabricated, and tested by NRaD to perform the helium leakage test with the new light pipe assemblies. A metal gasket was used in the design to provide a primary seal between the chamber and the chamber end closure. Helium leakage was measured via a pressure gage mounted directly to a port in the test chamber wall. The pressure chamber was designed to minimize the volume of pressurized helium around the light pipe assembly head so that any leakage would result in a noticeable drop in pressure in the interior of the chamber. Because no measurable drop in pressure was found in the test chamber after a test period of 24 hours, the NRaD light pipe assemblies were considered to have successfully met the requirements of the helium leakage test.

QUALITY CONTROL

One of the severe shortcomings of commercially available light pipe assemblies is the lack of material control documentation that is delivered with the hardware. Material control of light pipes systems used in U.S. Navy hyperbaric chambers associated with deep submergence systems is governed by reference 15. Since light pipe hardware is part of the hull pressure boundary of a hyperbaric chamber, it is part of the scope of certification (SOC) of the chamber and consequently must meet the material control requirements of paragraph 3.3.1 of reference 15 for materials designated Material Control Division A. Given this classification, the NRaD light pipe engineering drawings, figures 17 through 22, had to be approved by the Naval Sea Systems Command (NAVSEA). Subsequently, all light pipe hardware had to be delivered with the following objective quality evidence (OQE) to be certified for service in U.S. Navy hyperbaric chambers:

1. Mill product report certifying the chemical and mechanical properties of the CRES 316L bar stock used to fabricate the light pipe adapter and the light pipe retainer meet the requirements of reference 14.
2. Appendix A, Enclosure 2, and Enclosure 3 of reference 2 certifying the acrylic used to fabricate the light pipes meets the material manufacture and material properties required by reference 2.
3. Post-fabrication report certifying acrylic light pipe was annealed in accordance with paragraph 2–4.4(b) of reference 2.
4. Post-fabrication inspection report certifying that the CRES light pipe retainer, the acrylic light pipe, and the CRES light pipe adapter meet the dimensions and tolerances specified by engineering drawings 55910–0128929, 55910–0128930, and 55910–0128931 (figures 17 through 19).
5. Post-fabrication visual and liquid penetrant inspection report certifying the CRES light pipe retainer and CRES light pipe adapter meet the nondestructive testing requirements specified by the engineering drawings 55910–0128929, and 55910–0128931 (figures 17 and 19).
6. Pressure testing report certifying light pipe components have been tested in accordance with the Light Pipe Assembly Quality Control Test Specification 55910–0128935 (appendix D) based on the requirements of paragraph 2–7.8 of Article 7 of reference 2.
7. Post-pressure-testing inspection report certifying the acrylic light pipe meets the dimensions and tolerances specified by the engineering drawing 55910–0128930 (figure 18).
8. Report certifying the light pipe components have been cleaned and assembled in accordance with notes 2 and 3 of the light pipe assembly engineering drawing 55910–0128932, sheet 1 (figure 20).

Figures 50 through 52 show the setup used to perform the quality control pressure test per 55910–0128935 (appendix D). Prior to being placed in service, each light pipe assembly shall be pressured tested per the requirements of 55910–0128935 to demonstrate the light pipe assembly is adequate for 1000-psi, 150°F service in a man-rated hyperbaric chamber. Figures 50 and 51 show the temperature-controlled pressure vessel assembly and its components used to hydrostatically pressurize each light pipe assembly to 1500 psi for a minimum duration of 1 hour with the temperature of the light pipe assembly held constant at 125°F. Figure 52 shows the dial indicator setup used to measure axial displacements of the acrylic light pipe tip during the quality control pressure tests.

The OQE data generated for each light pipe component was to be identified by the permanent and unique part numbers used to mark each light pipe component to ensure traceability of all material control data. The CRES light pipe retainer and CRES light pipe adapter were vibro-etched with part number and serial numbers. The acrylic light pipe was marked with a part number and serial number as instructed by Section 2, Article 6 of reference 2 using an indelible ink pen.

MANUFACTURE

The acrylic plastic light pipes were manufactured from a 2-inch-thick cast acrylic sheet produced by Polycast Technology Corporation under the trademark of Polycast 101. The acrylic used was ultraviolet absorbing (UVA), preshrunk and certified to meet all the material properties specified by Section 2, Article 3 of reference 2. Fabrication of the light pipes was performed in accordance with Section 2, Article 4 of reference 2. Annealing of the acrylic sheet stock prior to machining was performed at 230°F for 8 hours. Each light pipe was machined on a manual lathe to a 16-microinch finish prior to final hand polishing. After machining and polishing each light pipe, the individual light pipes were again annealed at 185°F for 6 hours, followed by cooling at a rate not exceeding 11°F/hour.

The bulk of the machining of the CRES light pipe retainer and CRES light pipe adapter was performed on a numerically controlled lathe. The stainless steel alloy used to manufacture the retainer and adapter was annealed (Condition A) 316L 2 3/8-inch nominal round stock meeting the requirements of reference 14. Subsequent to final machining and liquid penetrant inspection of sealing surfaces, the retainer and adapter were cleaned and passivated in accordance with reference 13.

ASSEMBLY

Cleaning and assembly of the NRaD light pipe hardware was performed in accordance with U.S. Navy-recognized specifications and standards governing ocean engineering systems requiring oxygen-clean components. Cleaning agents, O–rings, O–ring grease and anti-seize compounds were selected so as to not contaminate the breathing gases in the hyperbaric chamber. Figure 20 provides the details of the materials and procedures used to clean and assemble the light pipe hardware.

The components of the light pipe assembly, i.e., the CRES retainer, acrylic light pipe, and CRES adapter, were thoroughly cleaned with filter cloths dampened with a solution of 0.1 ounce of non-ionic detergent (reference 7) per 1 gallon of distilled water (reference 12). The assembly components were then rinsed with filter cloths dampened with distilled water, dried, and double-bagged until ready for assembly. In addition to being compatible with oxygen-clean systems, non-ionic detergent is an excellent choice for cleaning acrylic because it does not initiate crazing of the acrylic surface as can occur with organic solvents. Organic solvents such as alcohol, methyl ethyl ketone (MEK), trichloroethane, acetone, xylene, and benzene will accelerate the formation of crazing on acrylic (reference 17). Crazing of acrylic when using organic cleaners can be especially severe when used on parts that have not been properly annealed after manufacture. The combination of residual surface stresses induced by machining and organic solvents is known to accentuate crazing. Annealing the acrylic removes residual surface stresses in the acrylic and consequently improves the tolerance of the material against mechanisms that cause crazing.

After cleaning, assembly of the light pipe hardware was started by lightly greasing the conical bearing surface of the CRES light pipe adapter with a fluorinated grease such as Krytox 240AC or Flourolube GR362 (products of I DuPont de Nemours and Hooker Chemical Co.) meeting the requirements of reference 9. A radial fluorocarbon O–ring seal M83248/1–129 (per reference 10) was then lubricated with fluorinated grease and assembled into the CRES light pipe adapter. This radial O–ring seal provides the primary seal between the CRES adapter and the acrylic light pipe. The greased conical bearing surface contact between the CRES adapter and the acrylic light pipe head acts as a secondary or backup seal. The acrylic light pipe was then seated in the CRES adapter by pressing the light pipe firmly in place with 10 to 20 pounds of force. Fluorinated grease was used as an anti-seize compound to lubricate the threads of the CRES light pipe retainer ring, and the retainer ring was installed in the CRES adapter using a custom spanner wrench and a 3/8-inch adjustable torque wrench to tighten the retainer to 20 in-lb torque. After lubricating O–ring seals M83248/1–214 and M83248/1–223 with fluorinated grease and installing them in the O–ring glands on the exterior of CRES light pipe adapter, the light pipe assembly was double-bagged until ready for installation in the hyperbaric chamber. These two O–rings provide a primary and secondary seal between the CRES adapter and the pipe-size penetration in the chamber wall.

The light pipe assembly is installed into the hyperbaric chamber wall from the interior of chamber. The light pipe assembly is inserted through the chamber wall penetration and captured in place by a CRES 304 flat washer and a CRES 304 1.000–14–UNS–2B hex nut tightened at the exterior of the chamber to 45 ft-lb torque. The light pipe assembly is then ready for installation of the external incandescent light source assembly and the light source power supply.

QUALIFICATION TESTING FOR ASME–PVHO SAFETY STANDARD

Although the NRaD acrylic light pipes are not currently one of standard window geometries recognized by the American Society of Mechanical Engineers Safety Standard for Pressure Vessels for Human Occupancy, ASME–PVHO–1 (reference 2), this standard was referenced extensively in the design, manufacture, assembly, and testing of the new acrylic light pipe hardware. ASME–PVHO–1 provides the most comprehensive guide to the safe use of acrylic plastic windows and has therefore been adopted by the U.S. Navy community for the design of viewports used in its manned submersibles and hyperbaric chamber facilities. Because of their current widespread use and their obvious similarities to the acrylic windows currently governed by reference 2, acrylic light pipes will be incorporated into ASME–PVHO–1 to provide future users with guidelines for the safe service of light pipes in hyperbaric facilities. The reason that light pipes are not currently part of reference 2 is that their acceptance into this standard depends on completion of a thorough pressure testing program that demonstrates their structural adequacy for service in PVHOs. As a result, the U.S. Navy has initiated a pressure testing program that, on completion, will allow the new NRaD light pipe designs to be submitted for acceptance into ASME–PVHO–1.

Nonstandard window geometries are defined by reference 2 as any window shape that it is not included in reference 2. By this definition, light pipes in general, and NRaD's light pipes specifically, are considered nonstandard windows. Paragraph 2–2.6 of reference 2 provides specific instruction on the pressure tests that must be successfully completed for a nonstandard window shape to be considered for adoption into the standard. This testing consists of a series of short-term, long-term, and cyclic proof pressure tests that will experimentally verify the structural integrity of the nonstandard window design based on its intended maximum operational service pressure and temperature.

The first series of tests required by paragraph 2–2.6.4 of reference 2 to validate a nonstandard acrylic window shapes are termed short-term proof pressure (STPP) tests. These tests have already been described in this report (see prior section on light pipe QUALIFICATION TESTING and appendix C) as they were part of the pressure tests that were successfully completed to qualify the NRaD light pipe designs for service to 1000-psi and 150°F service in U.S. Navy man-rated hyperbaric chambers. The STPP tests were selected for qualification/acceptance hydrostatic pressure tests of the light pipes by the U.S. Navy because they can be performed in a relative short period of time and still indicate a very high degree of structural reliability if successfully completed. The additional long-term and cyclic proof pressure test required for qualification/acceptance by ASME–PVHO–1 require significantly more time and cost and were therefore not originally part of the qualification/acceptance tests performed to certify the NRaD light pipe designs for U.S. Navy service.

The second and most demanding of the nonstandard window shape tests (in terms of time and cost) is the long-term proof pressure (LTPP) test defined in paragraph 2–2.6.5 of reference 2. The intent of the LTPP test is to demonstrate that the nonstandard acrylic window shape can sustain design pressure and design temperature continuously for a period of 80,000 hours without catastrophic failure. For the case of the NRaD light pipes, this would require proof that the light pipes can sustain a 1000-psi pressure differential while continuously held at 150°F for approximately 9.13 years (80,000 hours). Passing the LTPP test does not actually require a 9.13-year duration test but is demonstrated by subjecting five different window specimens to five different elevated, sustained pressures equal to 3.6, 3.2, 3.0, 2.8, and 2.6 times design pressure (3600, 3200, 3000, 2800, and 2600 psi). Each of these tests is performed with the nonstandard window specimen held at design temperature, and the time to catastrophic failure for each test is then recorded. The sustained pressure used for of each of these five tests is then plotted as a function of the corresponding time to

failure on a log-log curve and empirically curve-fitted with a straight line. The pressure calculated by extrapolating this straight line out to 80,000 hours of sustained pressure loading must exceed the intended design pressure for the nonstandard window shape.

The expense and difficulty in carrying out the LTPP test defined in paragraph 2–2.6.5 of reference 2 has hindered the incorporation of new window shapes into this safety standard. Consequently, at the time that this report was be written, efforts were also underway to rewrite paragraph 2–2.6.5 of reference 2 to make it more amenable to qualifying nonstandard window shapes while ensuring that the safety of the new window shapes will not be diminished. As of November 1995, the proposed rewrite of paragraph 2–2.6.5 was as follows:

> 2–2.6.5 The LTPP of the window with nonstandard geometry, or with standard geometry and lower CF, shall be experimentally verified as per the following. The LTPP windows tested may consist of any combination of model-scale or full-scale windows.
>
> (a) The windows shall be subjected to sustained pressure loading at design temperature.
>
> (b) Each window shall be subjected to a different pressure, and the duration of sustained pressure preceding the catastrophic failure shall be recorded. The pressures to which the individual windows shall be subjected are 0.9, 0.85, 0.8, 0.75, and 0.7 times the STPP established experimentally in paragraph 2–2.6.4. The testing of all windows may be initiated at the same time, or in the sequence listed above, beginning with the specimen tested at 0.9 times the STPP. If any of the windows tested in sequence survives sustained pressurization for 10,000 hours without catastrophic failure, the window design is considered to have satisfied fully all requirements of the LTPP test, and any remaining windows in the sequence need not be tested. If all five windows fail prior to withstanding 10,000 hours of sustained pressurization, the experimental data points shall be plotted on log-log coordinates, and the relationship between critical pressures and duration of loading shall be represented empirically by a straight line. If the extension of the plotted line to 80,000 hours of sustained loading exceeds the LTPP, the window design is considered to have satisfied fully all requirements of the LTPP test.
>
> (c) An alternative to the LTPP tests defined in (b) shall be sustained pressure loading of individual windows for a duration of 10,000 hours at design temperature per one on the following test programs:
>
> (1) two windows shall be tested at a sustained pressure equal to 8.85 STPP.
>
> (2) three windows shall be tested at a sustained pressure equal to 0.8 STPP.
>
> (3) four windows shall be tested at a sustained pressure equal to 0.75 STPP.
>
> (4) five windows shall be tested at a sustained pressure equal to 0.7 STPP.
>
> If all windows of any one of the four test programs above survives sustained pressurization for 10,000 hours without catastrophic failure, the window design is considered to have satisfied fully all requirements of the LTPP test.

A consequence of designing the acrylic light pipe conical frustum head to improve optical performance is that it is structurally overdesigned for its intended maximum service pressure and temperature (1000 psi and 150°F) when compared to standard window shapes governed by reference 2. An implication of the structural robustness of the light pipe design is that if the LTPP tests were carried out in accordance with the current wording provided in reference 2 (1993 Edition), no meaningful data would be obtained to pass the LTPP test. Subjecting the five different NRaD light pipes to

sustained pressure loads of 3600 psi, 3200 psi, 3000 psi, 2800 psi, and 2600 psi, respectively, while held at 150°F would not result in any catastrophic failures and therefore would not provide the data needed for extrapolating performance out to 80,000 hours of sustained loading. The current wording of ASME–PVHO–1 provides no options or guidance for this situation.

The impact of the rewrite of paragraph 2–2.6.5 shown above for the NRaD light pipes is that it provides clear options for performing the LTPP test and also significantly reduces the cost and effort required to pass the LTPP test without compromising safety. Based on this rewrite, a single light pipe assembly is currently to be subjected to a sustained pressure and temperature loading equal to 3600 psi and 150°F. This LTPP light pipe test is currently in process at the Marine Technology Department of Southwest Research Institute in San Antonio, TX and will complete the 10,000-hour hold during the spring of 1996.

The final test required by paragraph 2–2.6.6 of reference 2 for a nonstandard acrylic window shape is a crack-free cyclic proof pressure (CPP) test. This test was performed on two NRaD light pipes and consisted of subjecting the light pipe to 1000 pressure cycles from zero to 1000 psi and back with the temperature of the light pipe assembly held at 150°F. The average length of time of both the sustained loading period and the relaxation period of each pressure cycle is required to equal or exceed 4 hours. This allows completion of approximately three pressure cycles per day (if each cycle lasts a minimum of 8 hours) for a total test duration of at least 333 days. After completion of the CPP test, the acrylic light pipe must be disassembled from the light pipe adapter and visually inspected. Absence of any visible cracks on the surface of the acrylic shall be considered proof that the light pipe shape has meet the CPP test requirement for nonstandard window shapes. The CPP tests were also performed at Southwest Research Institute and were completed in February 1996. Inspection of the two light pipes subjected to the CPP test revealed no surface cracks. Photographs of the light pipe CPP test specimens are shown in figures 53 and 54 after completion of 1000 8-hour pressure cycles with the temperature of the light pipe assembly at 150°F. Figure 53 shows that light pipe CPP specimen serial number 60 has slight crazing on the 15° bevel surface where the CRES retainer bears against the acrylic light pipe head. In addition, CPP specimen serial number 60 has a raised circumferential band around the cylindrical portion of the light pipe head where the acrylic has extruded 0.002 inch (as measured with an optical comparitor) into the O-ring groove machined in the CRES adapter. All other surfaces of serial number 60 including the conical bearing surface are free of any indications. Figure 54 shows CPP specimen serial number 61, which is free of any cracks or crazing but also has a 0.002-inch raised circumferential band around the cylindrical surface of the light pipe head.

The slight surface crazing found on the 15° bevel of serial number 60 is due to stresses that occur on the surface of the bevel as thermal expansion of the acrylic during heating from room temperature to the 150°F CPP test temperature is resisted by the CRES retainer. The effects of thermal expansion can also be seen in the commercial light pipe shown in figure 14, where the cup mark from the set-screw has elongated in the axial direction. To minimize crazing of the light pipe 15° bevel from thermal loading, care should be taken to not exceed the installation torque specified on the light pipe assembly drawing, figure 20, for the CRES retainer. In addition, the application of a light film of an approved grease between the mating contact surfaces of the CRES retainer and the acrylic light pipe head bevel will help minimize the potential for crazing.

The raised circumferential band around the cylindrical head of serial numbers 60 and 61 is due to radial thermal expansion of the light pipe head into the CRES adapter O-ring groove during heating from room temperature to the 150°F CPP test temperature. Radial clearances between the acrylic light pipe head and the CRES retainer were selected to ensure that the O-ring seals properly at room

temperature for pressure differentials up to 1000 psi. The consequence of having the maximum allowable radial clearance at room temperature is that at elevated temperatures the radial gap between the two parts will close. Loss of radial clearance will aid in sealing but can also result in the extrusion seen in the CPP specimens and in commercial light pipes, as shown in figure 14. The CRES adapter should be inspected to ensure that edges of the O-ring groove have been broken, with 0.005-inch radius as specified in the engineering drawing for the CRES adapter, figure 19.

The CPP test specimens were subjected to a temperature differential that is more extreme than light pipes will see in normal operational service. As mentioned previously, operation of the incandescent light source HYL 250–LS–DP was found to raise the temperature of the acrylic light pipe head 20.7°F above ambient room temperature. By comparison, the CPP test specimens were subjected to 1000 cycles at a temperature approximately 80°F higher than the temperature at which the light pipe hardware was manufactured, inspected, and assembled. After 1 year in operational service, thorough inspections conducted on NRaD acrylic light pipes have not found any thermally induced indications such as seen in the CPP test specimens or detected indications of any other kind.

CONCLUSIONS

1. NRaD light pipe assemblies provide improved structural and optical performance over commercial equivalent light pipe hardware and have been designed to interface with standard pipe-sized chamber penetrations, commercially available light sources, light diffusers, and fiber optic flex pipes. This allows a one-for-one replacement of commercial hardware with the NRaD light pipe assemblies, with minimal impact to the existing chamber.
2. NRaD light pipe assemblies have been manufactured, assembled, inspected, and tested to meet performance and material control requirements of the U.S. Navy and have been accepted for service by the Naval Sea Systems Command. On completion of CPP and LTPP testing in 1996, NRaD light pipe assemblies will also be accepted by the ASME Safety Standard for Pressure Vessels for Human Occupancy (PVHO). Currently, the NRaD designs are the only light pipe assemblies that meet both U.S. Navy and ASME–PVHO performance and material control requirements.
3. NRaD light pipe assemblies are recommended for interior illumination of man-rated hyperbaric chambers provided the chamber working pressure does not exceed 1000 psi and the temperature of the conical frustum head of the acrylic light pipe does not rise above 150°F.

RECOMMENDATIONS

1. At the conclusion of the LTPP pressure testing currently in progress, NRaD light pipe assemblies should be submitted to ASME–PVHO–1 for incorporation into this Safety Standard for free-of-charge use by the entire hyperbaric facility community.
2. The first group of NRaD light pipe assemblies now in service in U.S. Navy hyperbaric chambers should be inspected annually to verify that the improvements made in the design and manufacture of the NRaD acrylic light pipes has adequately reduced the incidence of crazing/cracking observed in the past with commercial light pipe hardware.
3. NRaD has developed a new design of an external incandescent light source assembly. This illuminator assembly was designed to eliminate the acrylic light pipe exposure to ultraviolet and infrared radiation generated by commercial light sources. This new illuminator assembly also provides improvements in ducting to increase fan cooling efficiency and makes use of an incandescent light source with a longer lamp life. This new illuminator design should be considered for future service in hyperbaric chambers to improve the operating environment that the acrylic light pipes are subjected to. Reducing the exposure to ultraviolet light and thermal cycling will further aid in eliminating the crazing/cracking problems witnessed in commercial light pipe hardware to date.
4. NRaD light pipe hardware was qualified for 1000-psi, 150°F service in PVHOs to encompass all current U.S. Navy needs. The robustness of the NRaD light pipe design demonstrated through pressure testing to 20,000 psi (at 75°F) indicates that this design could be qualified for higher service pressures should the requirement ever arise.

REFERENCES

1. ANSI Y14.5M. 1982. “Dimensioning and Tolerancing – American National Standard Engineering Drawings and Related Documentation Practices.” The American Society of Mechanical Engineers.

2. ASME–PVHO–1–1993 Edition. “Safety Standard for Pressure Vessels for Human Occupancy.” The American Society of Mechanical Engineers.

3. Canty, J. M. 1974. “Light Piping Unit for Supplying Radiant Energy to the Interior of a Pressure Vessel.” U.S. Patent No. 3,813,514.

4. Gray, K. O. 1977. “Externally Generated Light (EGL) Systems for Hyperbaric/Hypobaric Chambers.” NCEL TN 1469 (Jan). Civil Engineering Laboratory, Port Hueneme, CA.

5. Haux, G. F. K. *Subsea Manned Engineering*, Best Publishing Company.

6. Lones, J. J. 1994. “Evaluation and Mock–Up of a lighting Fixture for an Optical Light Penetrator.” Adroit Engineering, Inc.

7. MIL–D–16791G. 1990. “Detergents, General Purpose (Liquid, Nonionic).”

8. MIL–HDBK–5E. 1987. “Metallic Materials and Elements for Aerospace Vehicle Structures.”

9. MIL–G–27617E. 1994. “Grease, Aircraft and Instrument, Fuel and Oxidizer Resistant.”

10. MIL–R–83248/1A. 1975. “Rubber, Fluorocarbon Elastomer, High Temperature, Fluid, and Compression Set Resistant, O–Rings, Class 1, 75 Hardness.”

11. MIL–S–901. “Shock Tests, High Impact, Shipboard Machinery, Equipment, and Systems, Requirements For.”

12. MIL–STD–767C. “Cleaning Requirements for Special Purpose Equipment, Including Piping Systems.”

13. QQ–P–35C. 1988. “Passivation Treatments for Corrosion–Resistant Steel.”

14. QQ–S–763E. 1986. “Steel Bars, Wire, Shapes, and Forgings, Corrosion Resisting.”

15. SS800–AG–MAN–010/P–9290. “System Certification Procedures and Criteria Manual for Deep Submergence Systems.” Naval Sea Systems Command.

16. Stachiw, J. D. 1977. “Acrylic Plastic Viewports for Ocean Engineering Applications.” NUC TP 562 , vols I and II (Feb). Naval Undersea Center, San Diego, CA.

17. Stachiw, J. D. and J. L. Stachiw. 1989. “Crazing and Degradation of Flexure Strength in Acrylic Plates as a Function of Time.” NOSC TR 1303 (June). Naval Ocean Systems Center, San Diego, CA.

GLOSSARY

Acrylic	Glass-like thermoplastic known chemically as polymethyl methacrylate; also known by trade names Lucite, Plexiglass, and others
ASME	The American Society of Mechanical Engineers
CF	Conversion factor – safety factor used in the design of acrylic windows that is based on the intended design pressure and temperature environment of the window
CPP	Crack-free cyclic proof pressure
CRES	Corrosion-resistant steel
Di	Inner diameter of an acrylic window
Df	Through diameter of the window flange
E	Elastic modulus
EGL	Externally generated light
F	Fahrenheit
FEA	Finite element analysis
LPF	Low-pressure face of an acrylic window
LTPP	Long-term proof pressure
NAVSEA	Naval Sea Systems Command
NRaD	Naval Command, Control and Ocean Surveillance Center RDT&E Division
OQE	Objective quality evidence
P	Design pressure of an acrylic window
PVHO	Pressure vessels for human occupancy
psi	Pounds per square inch
SOC	Scope of certification
STCP	Short-term critical pressure
STPP	Short-term proof pressure
t	Thickness of the acrylic window
v	Poisson’s ratio
VAC	Volts alternating current
VDC	Volts direct current
viewport	Penetration in the pressure vessel that includes the flange, window, retaining rings, and seals
window	Transparent, impermeable, pressure-resistant viewport insert

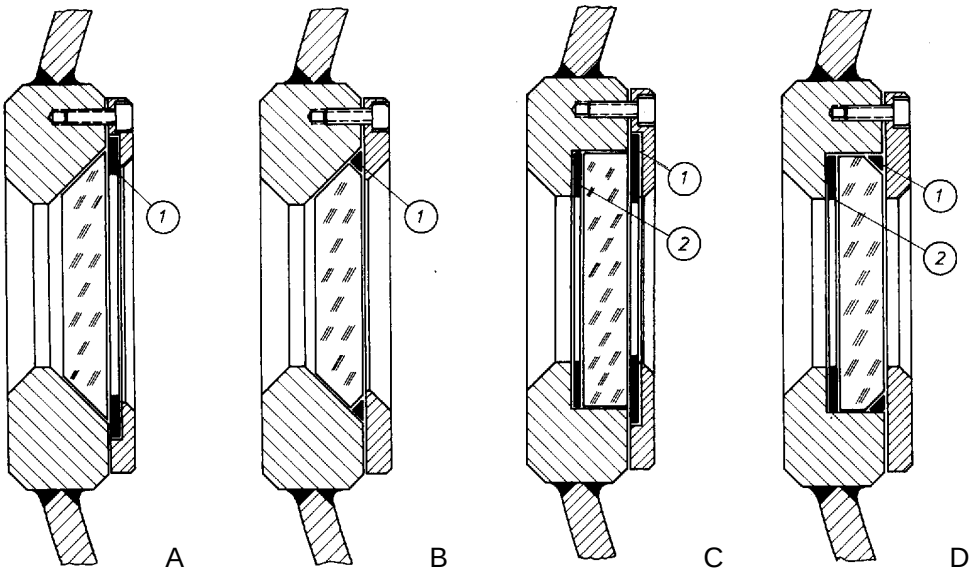

A1 Neoprene gasket
B1 Neoprene O-ring
C1 Soft neoprene gasket
C2 Hard bearing gasket
D1 Neoprene O-ring
D2 Hard-bearing gasket

Figure 1. Typical hyperbaric viewport designs.

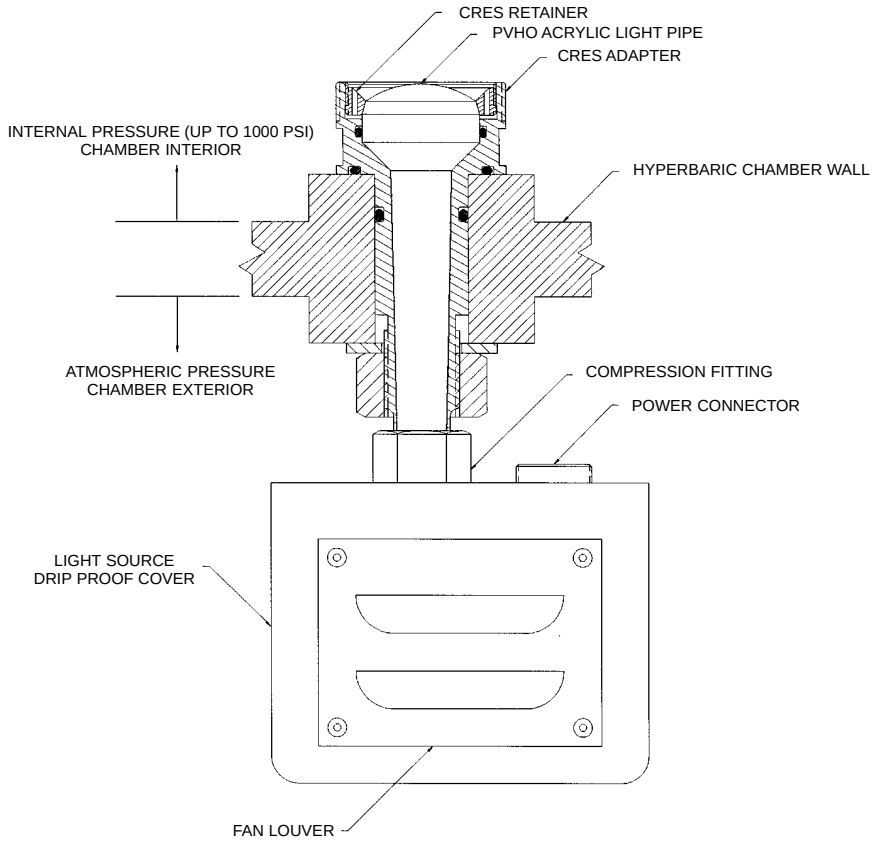

Figure 2. Light pipe design details, front view.

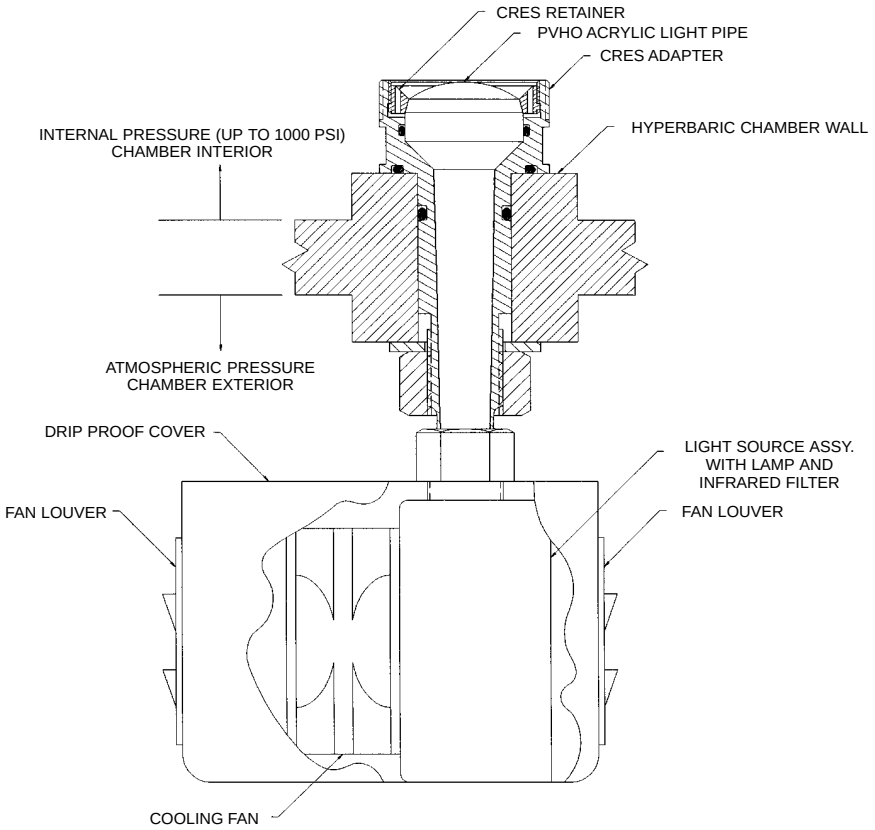

Figure 3. Light pipe design details, side view.

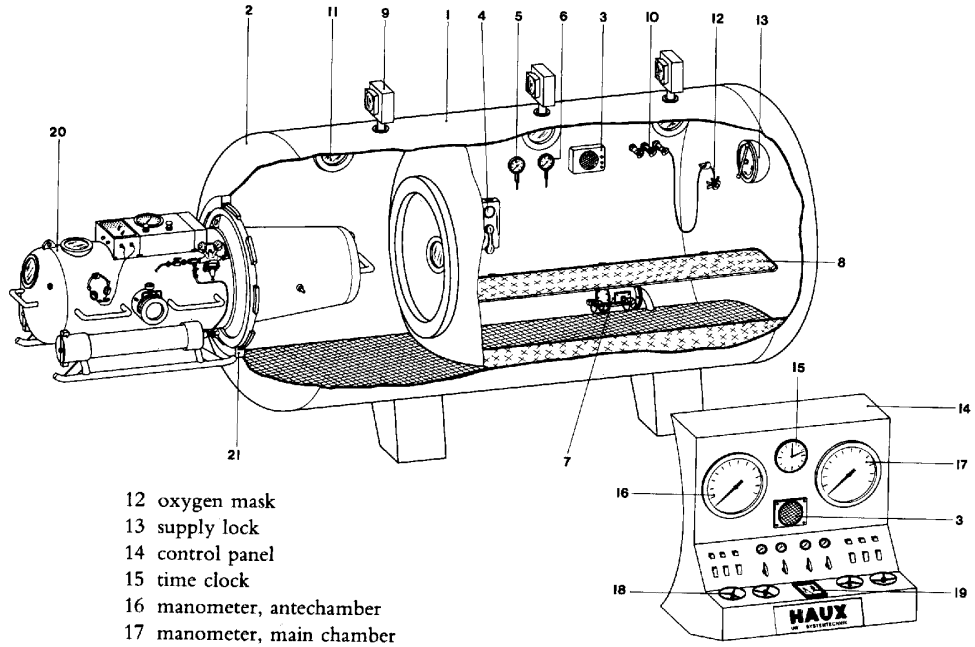

1 main chamber
2 antechamber
3 loud speaker
4 telephone
5 thermometer
6 manometer
7 inner control valves
8 bunk
9 lights
10 oxygen valves
11 viewports
12 oxygen mask
13 supply lock
14 control panel
15 time clock
16 manometer, antechamber
17 manometer, main chamber
18 valves
19 pressure recorder
20 one man chamber
21 bayonet flange

Figure 4. Light pipes assembled into a hyperbaric chamber.

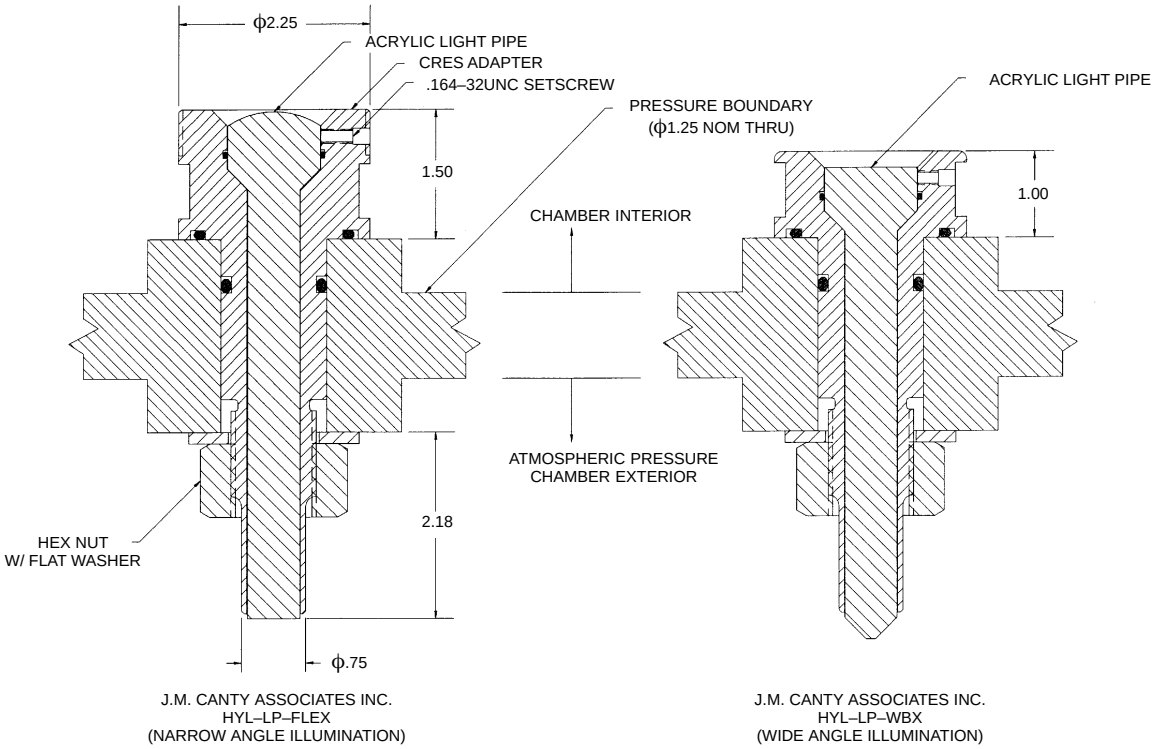

Figure 5. Commercially available light pipes.

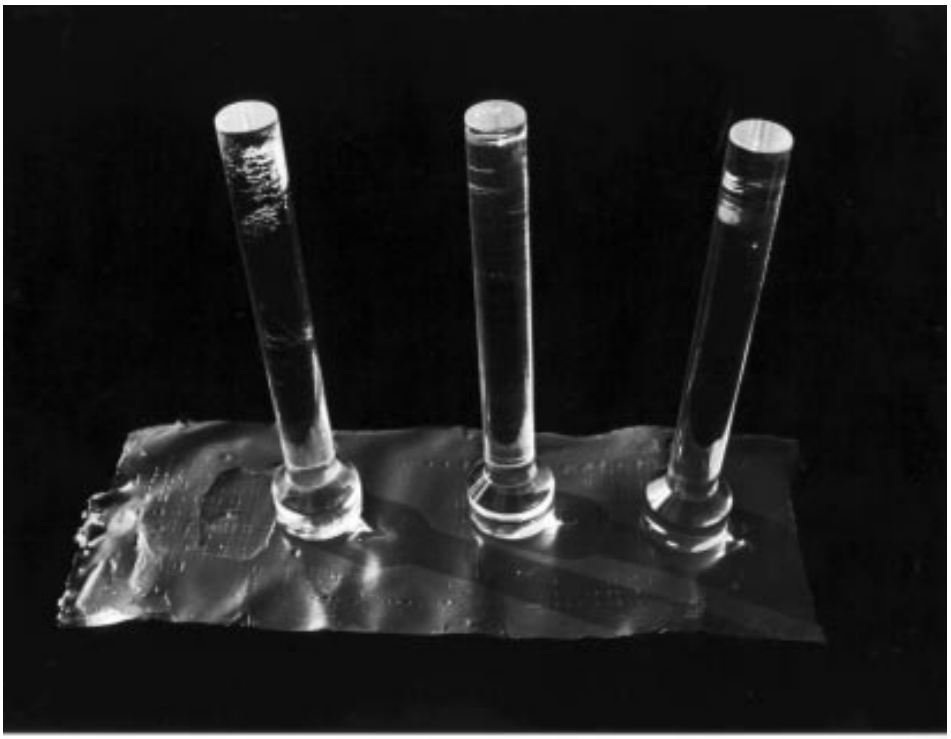

Figure 6. Surface crazing/cracking in commercial narrow angle light pipes after 4 years service.

Figure 7. Surface crazing/cracking in commercial wide angle light pipes after 4 years service.

Figure 8. Detail of commercial wide angle light pipe surface damage.

Figure 9. Commercial wide angle light pipe stem surface damage, detail 1.

Figure 10. Commercial wide angle light pipe stem surface damage, detail 2.

Figure 11. Commercial wide angle light pipe head surface damage, detail 1.

Figure 12. Commercial wide angle light pipe head surface damage, detail 2.

Figure 13. Commercial wide angle light pipe head surface damage, detail 3.

Figure 14. Commercial narrow angle light pipe setscrew damage.

Figure 15. NRaD narrow angle light pipe assembly.

Figure 16. NRaD wide angle light pipe assembly.

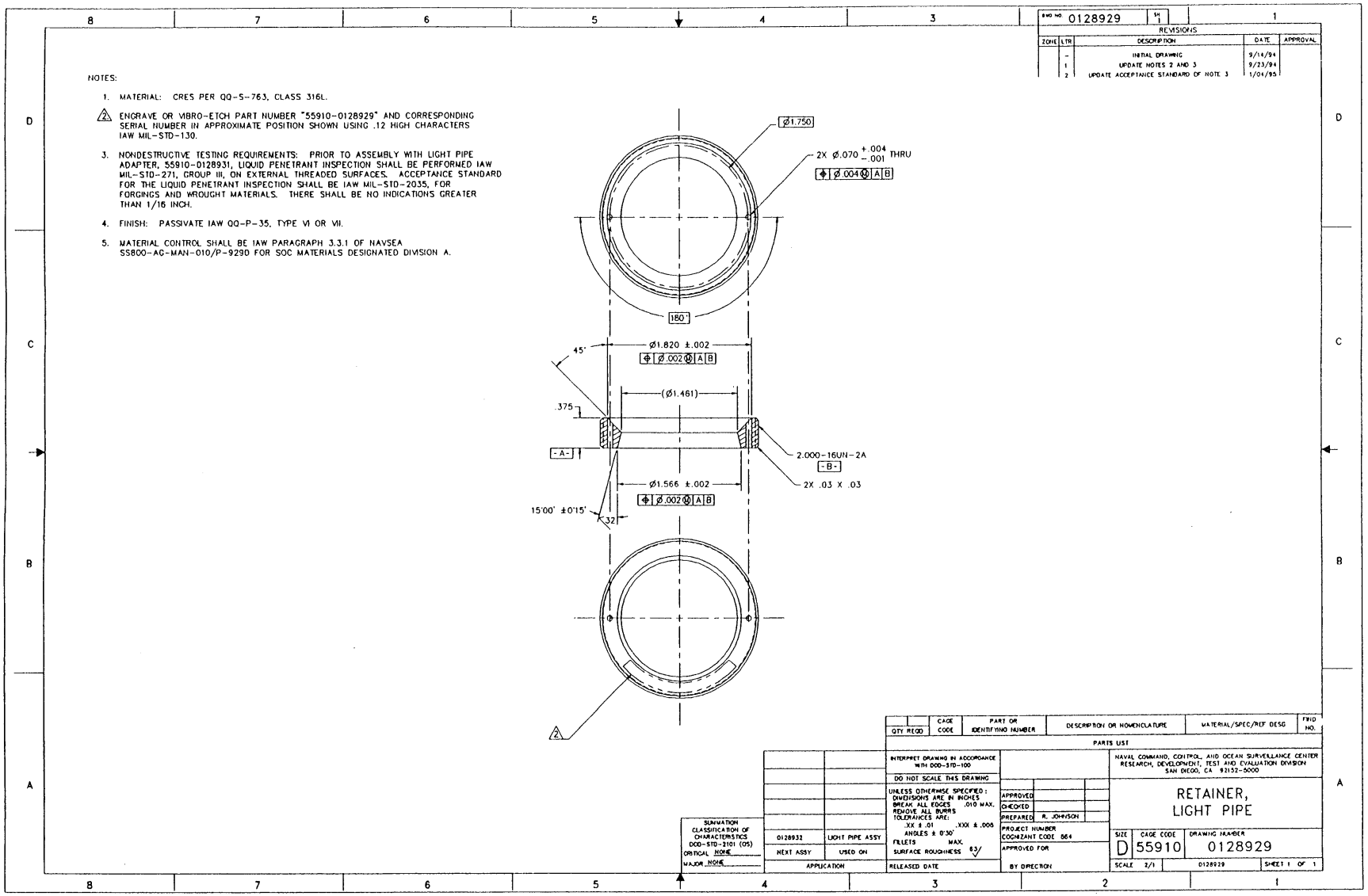

Figure 17. 55910-0128929 light pipe retainer.

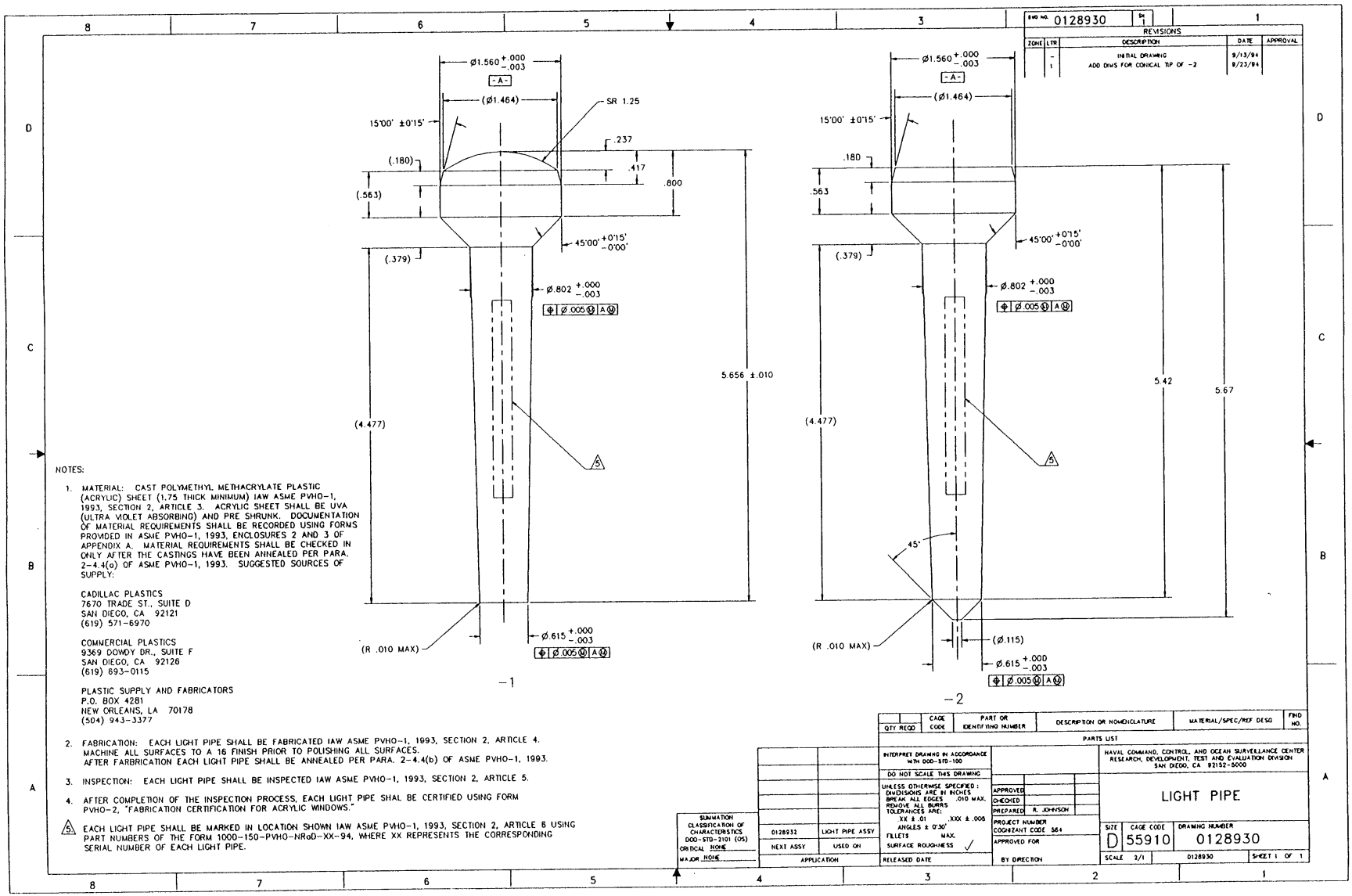

Figure 18. 55910-0128930 light pipe.

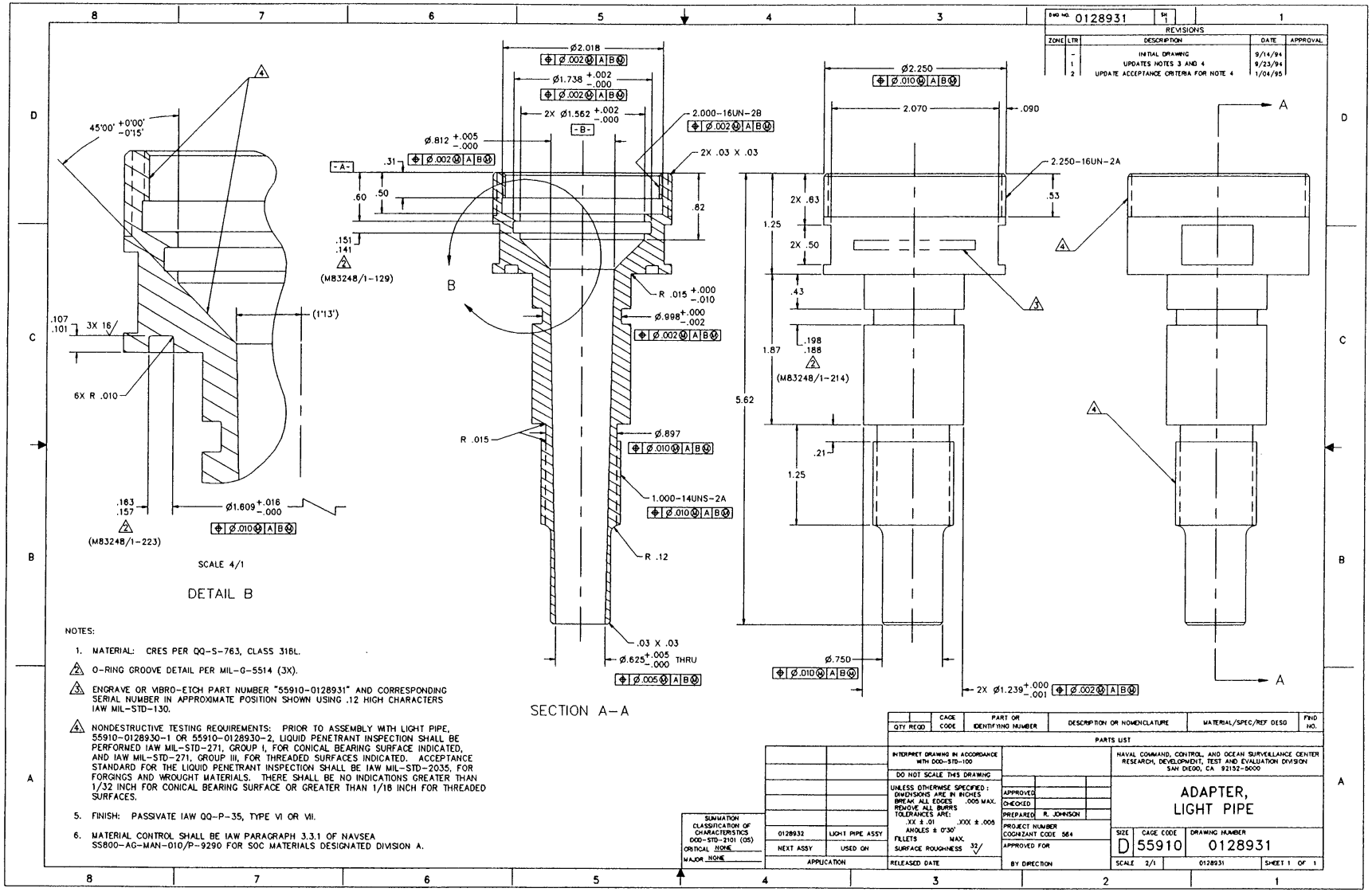

Figure 19. 55910-0128931 light pipe adapter.

NOTES:

1. MATERIAL CONTROL SHALL BE IAW PARAGRAPH 3.3.1 OF NAVSEA SS800-AG-MAN-010/P-9290 FOR SOC MATERIALS DESIGNATED DIVISION A.
2. CLEANING PROCEDURES FOR LIGHT PIPE ASSEMBLY USING A CONTAINMENT SUFFICIENT TO CREATE A GRADE B CLEAN AREA IAW MIL-STD-767.
   A. USING A FILTER CLOTH (ITEM 12) AND DETERGENT SOLUTION (.1 OUNCE OF NON-IONIC DETERGENT (ITEM 10) PER 1 GALLON OF WARM WATER (ITEM 11), THOROUGHLY CLEAN EACH LIGHT PIPE ASSEMBLY COMPONENT (LIGHT PIPE RETAINER (ITEM 1), LIGHT PIPE (ITEM 2 OR 3), AND LIGHT PIPE ADAPTER (ITEM 4)). PAY SPECIAL ATTENTION WHEN CLEANING LIGHT PIPE (ITEM 2 OR 3) TO AVOID SCRATCHING ANY SURFACES. SURGICAL GLOVES (ITEM 13) SHOULD BE WORN WHEN HANDLING THE LIGHT PIPES (ITEM 2 OR 3) TO PREVENT CONTACT WITH BARE HANDS.
   B. RINSE EACH LIGHT PIPE ASSEMBLY COMPONENT BY WIPING WITH FILTER CLOTH (ITEM 12) DAMPENED WITH WARM WATER (ITEM 11) UNTIL ALL SIGNS OF DETERGENT SOLUTION HAVE BEEN REMOVED.
   C. DRY EACH LIGHT PIPE ASSEMBLY COMPONENT THOROUGHLY USING FILTER CLOTHS (ITEM 12).
   D. VISUALLY INSPECT EACH COMPONENT FOR DUST, OIL OR ANY OTHER FOREIGN MATERIALS. REPEAT CLEARNING INSTRUCTIONS 2.A. THROUGH 2.C. IF ANY FOREIGN MATERIAL IS DETECTED.
   E. ATMOSPHERIC PROTECTION SHALL BE PROVIDED FOR EACH LIGHT PIPE ASSEMBLY COMPONENT BY DOUBLE BAGGING THE COMPONENT WITH BAGS (ITEM 14). A LABLE STATING "GRADE B CLEANED PER MIL-STD-767" SHALL BE PLACED BETWEEN THE FIRST AND SECOND BAG.
3. INSTALLATION PROCEDURES FOR LIGHT PIPE ASSEMBLY:
   A. WORK A DAB OF APPROVED GREASE (ITEM 15 OR 16) INTO A COTTON SWAB AND VERY LIGHTLY SWAB THE CONICAL BEARING SEAT ON THE INTERIOR OF THE LIGHT PIPE ADAPTER (ITEM 4).
   B. LUBRICATE O-RING (ITEM 7) WITH APPROVED GREASE (ITEM 15 OR 16) AND INSTALL IN THE LIGHT PIPE ADAPTER (ITEM 4) O-RING GLAND SHOWN.
   C. WEARING SURGICAL GLOVES (ITEM 13) TO HANDLE THE LIGHT PIPE (ITEM 2 OR 3), INSTALL THE LIGHT PIPE INTO THE LIGHT PIPE ADAPTER (ITEM 4), PRESSING FIRMLY (10 TO 20 LBS. FORCE) UNTIL LIGHT PIPE IS FIRMLY SEATED IN THE LIGHT PIPE ADAPTER.
   D. LUBRICATE THREADS OF LIGHT PIPE RETAINER (ITEM 1) WITH APPROVED GREASE (ITEM 15 OR 16) AND INSTALL IN LIGHT PIPE ADAPTER (ITEM 4) WITH SPANNER WRENCH (ITEM 5) AND A 3/8 DRIVE ADJUSTABLE TORQUE WRENCH, TIGHTENING TO 20^{+10}_{-0} IN-LBS TORQUE.
   E. LUBRICATE O-RINGS (ITEMS 8 AND 9) WITH APPROVED GREASE (ITEM 15 OR 16) AND INSTALL IN THE O-RING GLANDS ON THE EXTERIOR OF THE LIGHT PIPE ADAPTER (ITEM 4) AS SHOWN.
   F. THE LIGHT PIPE ASSEMBLY IS NOW READY FOR INSTALLATION INTO THE CHAMBER. THE LIGHT PIPE ASSEMBLY SHALL BE INSTALLED THROUGH THE CHAMBER WALL USING HEX NUT AND WASHER (ITEMS 17 AND 18). HEX NUT SHALL BE TIGHTENED TO 45±5 FT-LBS TORQUE.
4. QUALIFICATION/ACCEPTANCE TESTING OF THE LIGHT PIPE ASSEMBLY DESIGNS 0128932-1 AND -2 SHALL BE IAW WITH 55910-0128934. QUALIFICATION/ACCEPTANCE TESTING SHALL CONSIST OF TEMPERATURE MONITORING, HYDROSTATIC PRESSURE TESTING, SHOCK TESTING, AND HELIUM LEAKAGE TESTING.
5. QUALITY CONTROL TESTING OF EACH LIGHT PIPE ASSEMBLY 0128932-1 AND -2 SHALL BE IAW WITH 55910-0128935. QUALITY CONTROL TESTING OF EACH LIGHT PIPE ASSEMBLY SHALL CONSIST OF HYDROSTATIC PRESSURE TESTING..

DWG NO. 0128932 SH 1

REVISIONS

ZONE	LTR	DESCRIPTION	DATE	APPROVAL
	-	INITIAL DRAWING	10/25/94	
	1	UPDATE NOTE 2.E.	11/03/94	
	2	UPDATE NOTES 3 AND 4	11/11/94	
	3	UPDATE NOTE 2.A.	1/04/95	
	4	UPDATE ITEM 15, WAS GPL-206	1/09/95	
	6	REMOVE NOTE REFERENCING NAVSY DWG. ADD MAT CONTROL PER MAN-010	1/31/95	
	6	ADD ITEMS 17 AND 18, UPDATE NOTE 2.F	2/13/95	
	7	CORRECT DWG. NOS. IN NOTES 3 AND 4	3/9/95	
	8	CLEANING WAS NOTE 1, INSTALL WAS NOTE 2	4/25/95	

-2 QTY REQD	-1 QTY REQD	CAGE CODE	PART OR IDENTIFYING NUMBER	DESCRIPTION OR NOMENCLATURE	MATERIAL/SPEC/REF DESG	FIND NO.
1	1			WASHER, PLAIN, FLAT, CRES 304	#1.125 ID, #2.000 OD, .125 THICK	18
1	1			NUT, PLAIN, HEX, CRES 304	1.000-14UNS-2B, .625 THICK, 1.75 ACROSS FLATS	17
AR	AR		FLOUROLUBE GR-362	FLUORINATED GREASE	MIL-G-27617, TYPE III, HOOKER CHEMICAL CO.	16
AR	AR		KRYTOX 240AC	FLUORINATED GREASE	MIL-G-27617, TYPE III, E.I. DUPONT DE NEMOURS	15
AR	AR		MIL-STD-767	BAGS	GRADE B	14
AR	AR			SURGICAL GLOVES	RUBBER OR VINYL	13
AR	AR		MIL-STD-767	FILTER CLOTHS	PARA. 3.12	12
AR	AR		MIL-STD-767	DISTILLED WATER	GRADE B, PARA. 3.27	11
AR	AR		MIL-D-16791	NON-IONIC DETERGENT	TYPE I	10
1	1		M83248/1-223	O-RING, VITON	MIL-R-83248/1	9
1	1		M83248/1-214	O-RING, VITON	MIL-R-83248/1	8
1	1		M83248/1-129	O-RING, VITON	MIL-R-83248/1	7
						6
1	1	55910	0128933	SPANNER, WRENCH		5
1	1	55910	0128931	ADAPTER, LIGHT PIPE		4
1		55910	0128930-2	LIGHT PIPE		3
	1	55910	0128930-1	LIGHT PIPE		2
1	1	55910	0128929	RETAINER, LIGHT PIPE		1

PARTS LIST

SUMMATION CLASSIFICATION OF CHARACTERISTICS DOD-STD-2101 (OS)
CRITICAL NONE
MAJOR NONE

NEXT ASSY | USED ON
APPLICATION

INTERPRET DRAWING IN ACCORDANCE WITH DOD-STD-100
DO NOT SCALE THIS DRAWING
UNLESS OTHERWISE SPECIFIED: DIMENSIONS ARE IN INCHES. BREAK ALL EDGES .010 MAX. REMOVE ALL BURRS. TOLERANCES ARE: .XX ± .XXX ± ANGLES ± FILLETS MAX. SURFACE ROUGHNESS ✓
RELEASED DATE

APPROVED
CHECKED
PREPARED R. JOHNSON
PROJECT NUMBER
COGNIZANT CODE 584
APPROVED FOR
BY DIRECTION

NAVAL COMMAND, CONTROL, AND OCEAN SURVEILLANCE CENTER RESEARCH, DEVELOPMENT, TEST AND EVALUATION DIVISION SAN DIEGO, CA 92152-5000

LIGHT PIPE ASSEMBLY

SIZE D | CAGE CODE 55910 | DRAWING NUMBER 0128932
SCALE 2/1 | 0128931 | SHEET 1 OF 2

Figure 20. 55910-0128932 light pipe assembly (sheet 1).

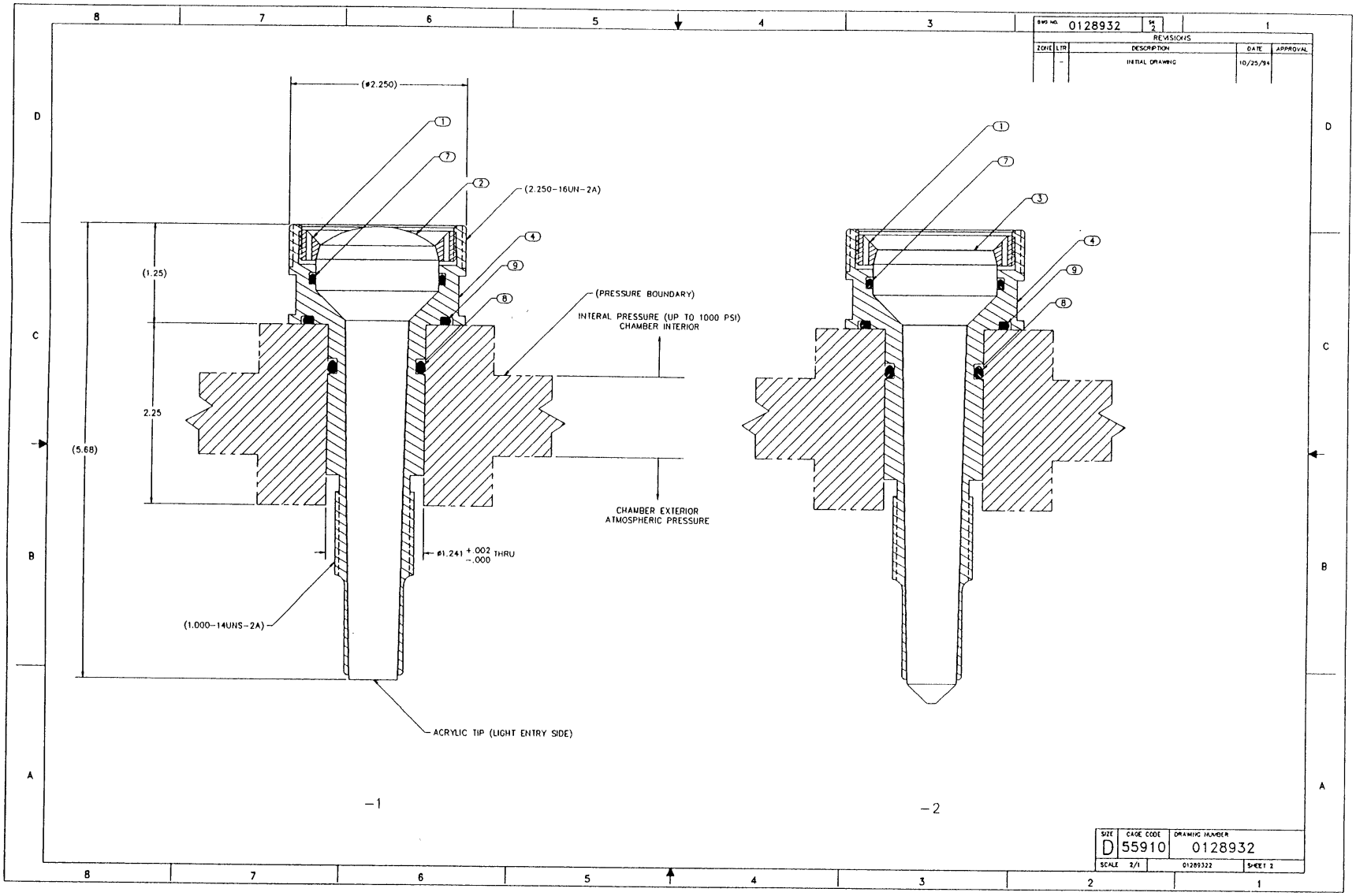

Figure 21. 55910-0128932 light pipe assemlby (sheet 2).

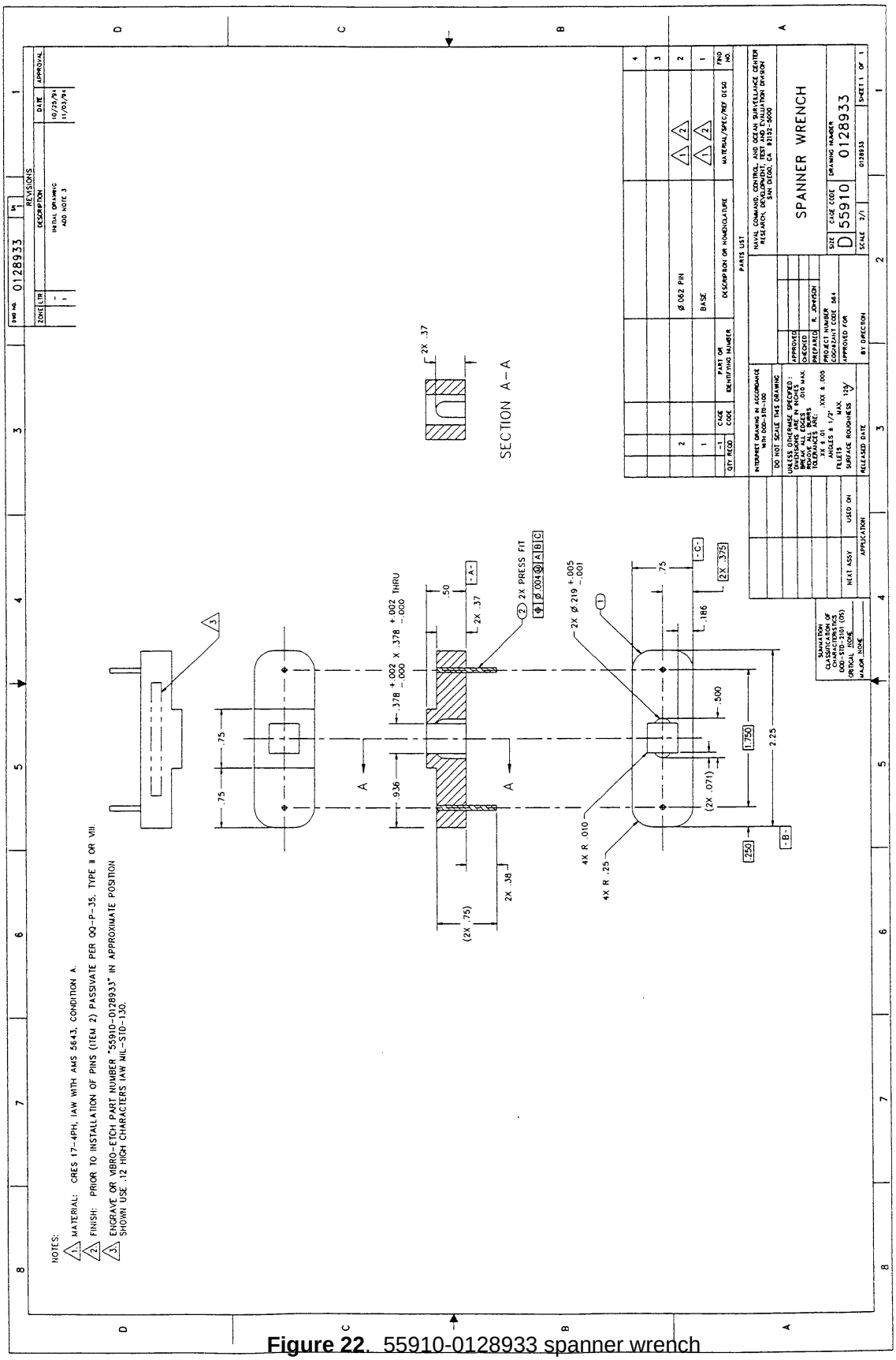

Figure 22. 55910-0128933 spanner wrench

Figure 22. 55910-0128933 spanner wrench.

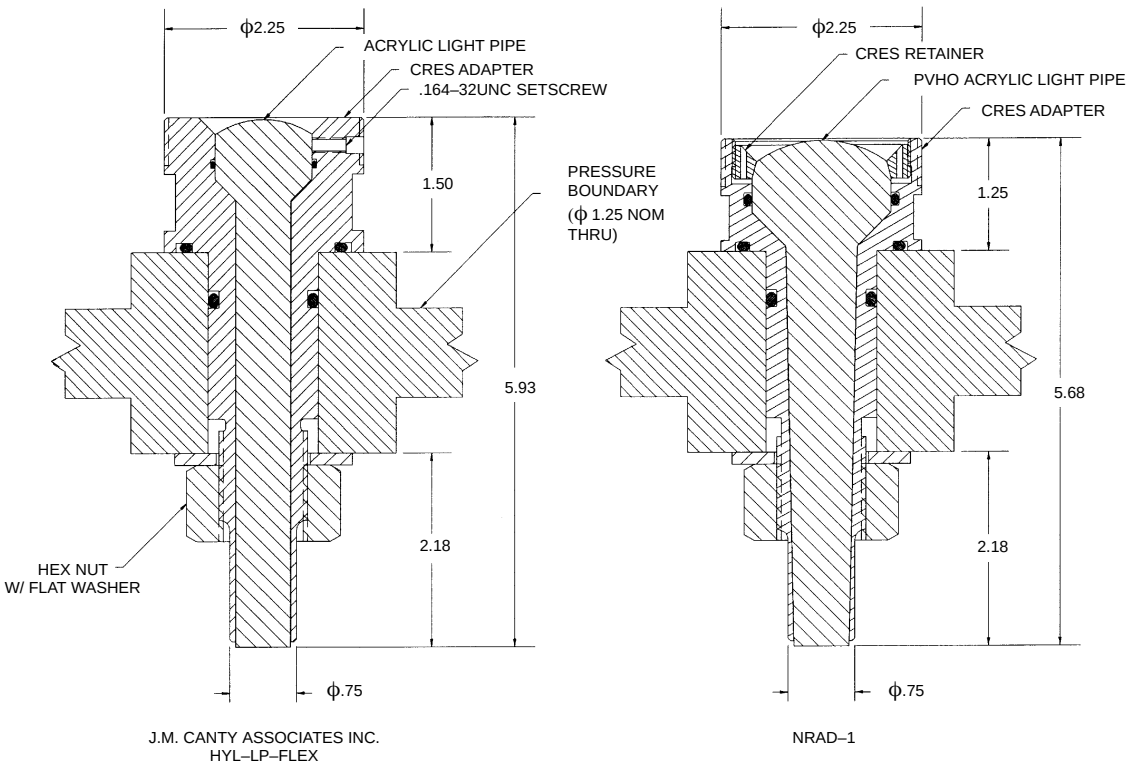

Figure 23. Comparison of commercial and NRaD narrow angle light pipe designs.

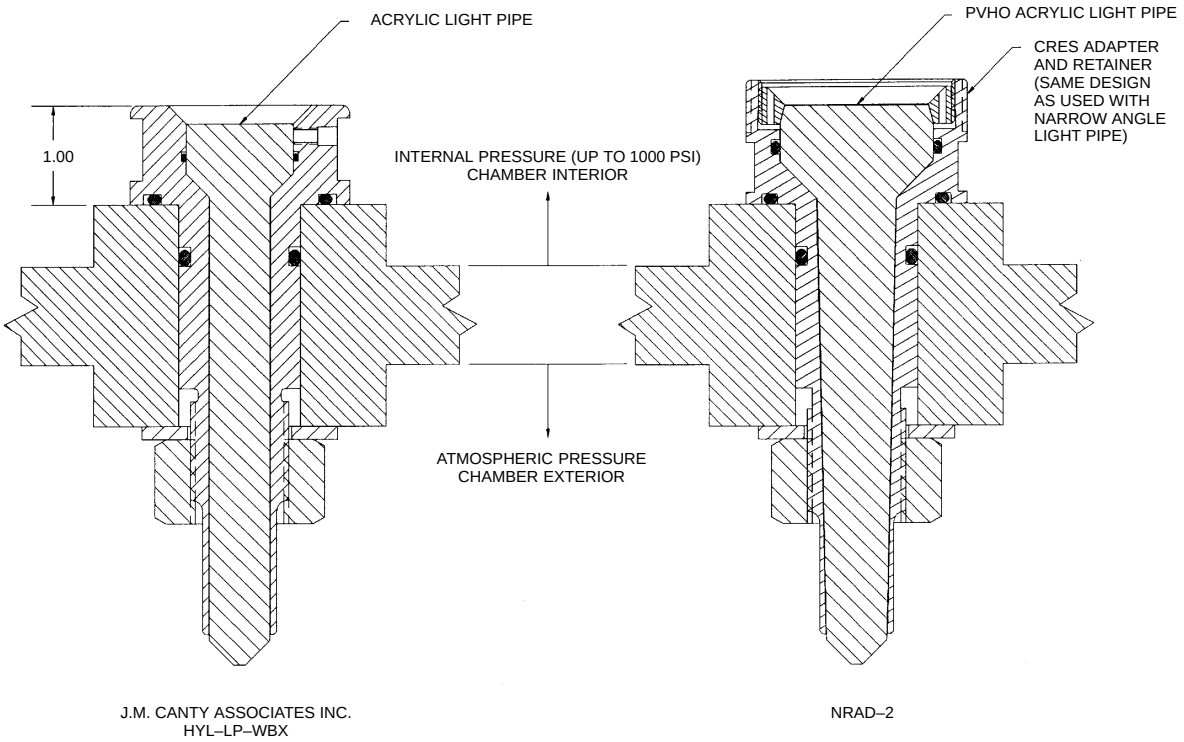

Figure 24. Comparison of commercial and NRaD wide angle light pipe designs.

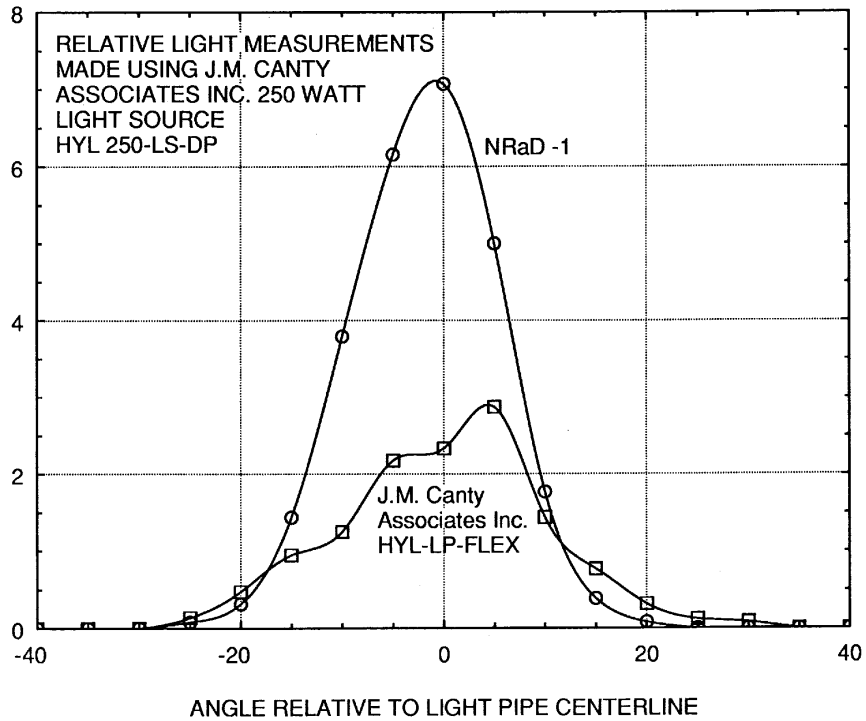

Figure 25. Comparison of relative light intensities for narrow angle light pipe designs.

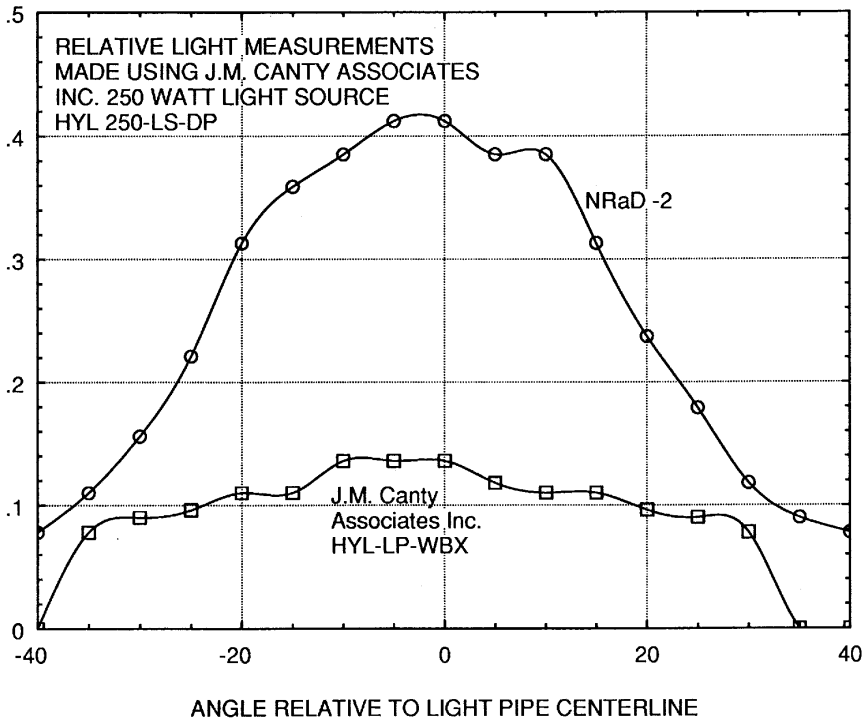

Figure 26. Comparison of relative light intensities for wide angle light pipe designs.

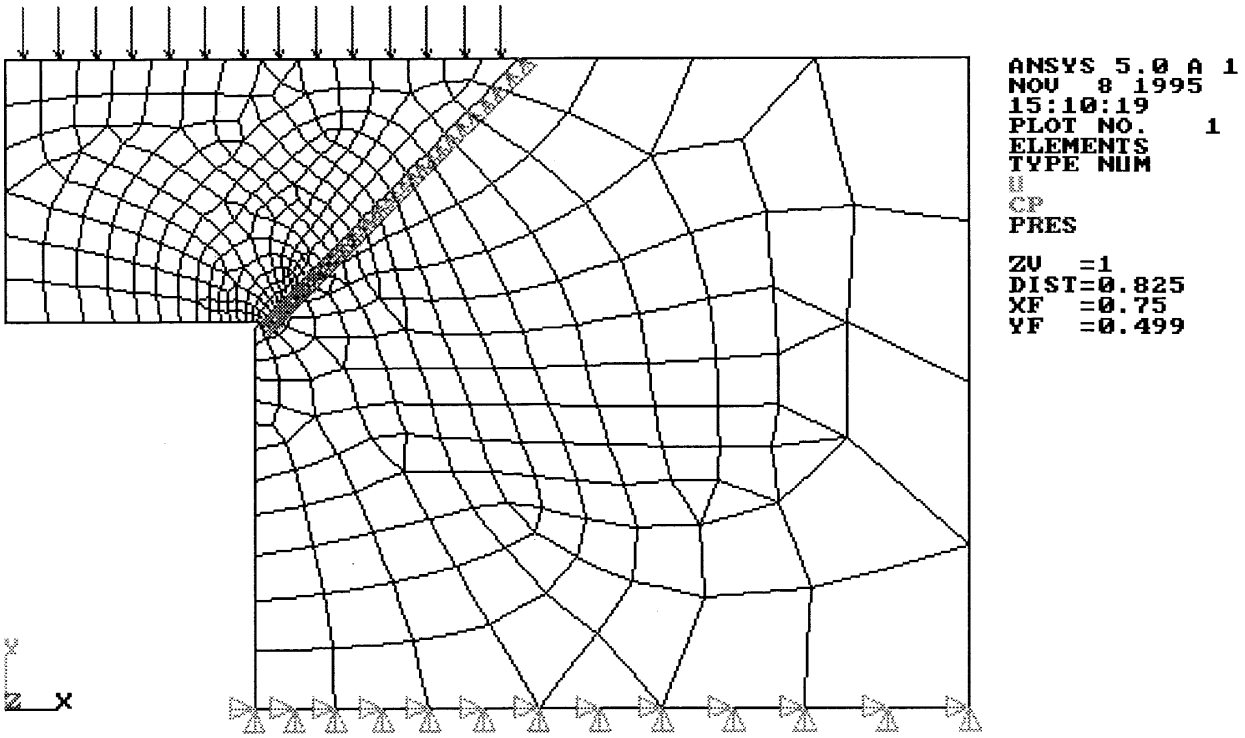

Figure 27. Acrylic conical frustum window (t/Di = 0.5) FEA model.

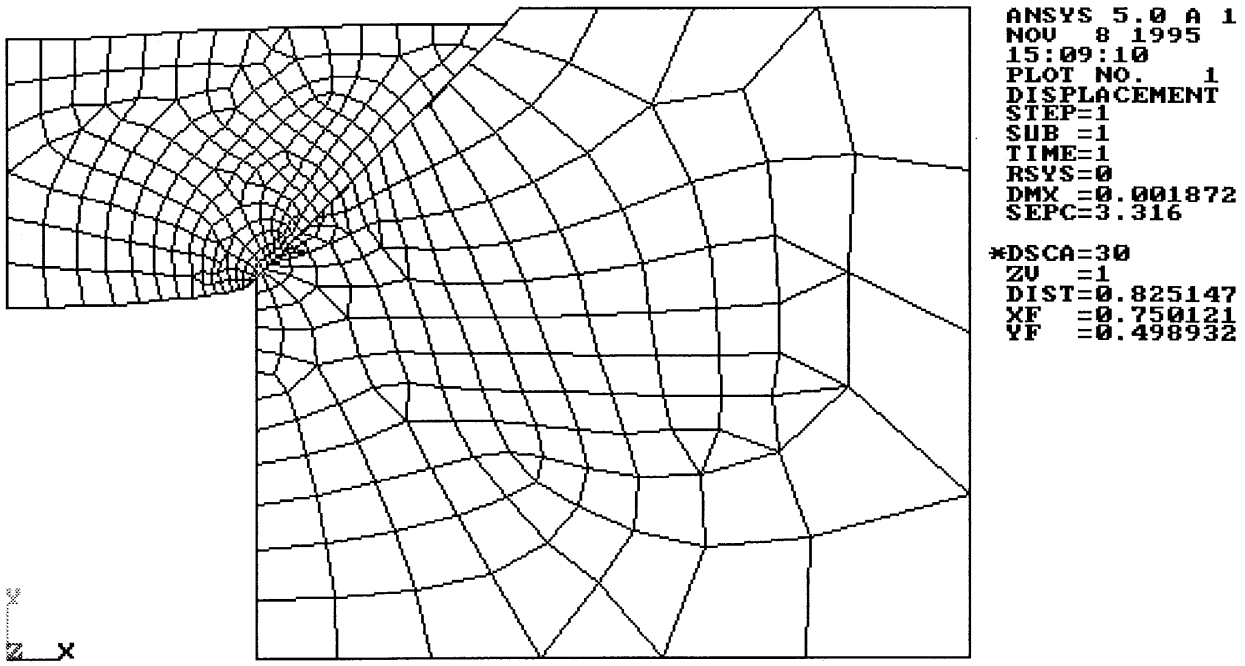

Figure 28. Acrylic conical frustum window (t/Di = 0.5) deflected contour (30X) at 1000 psi.

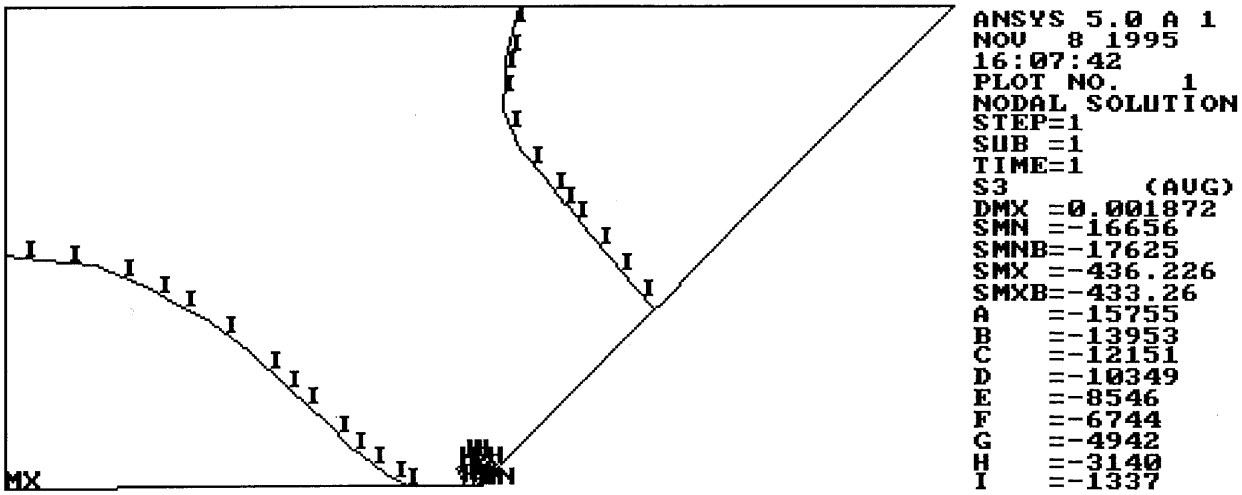

Figure 29. Acrylic conical frustum window (t/Di = 0.5) minimum principal stress contours at 1000 psi.

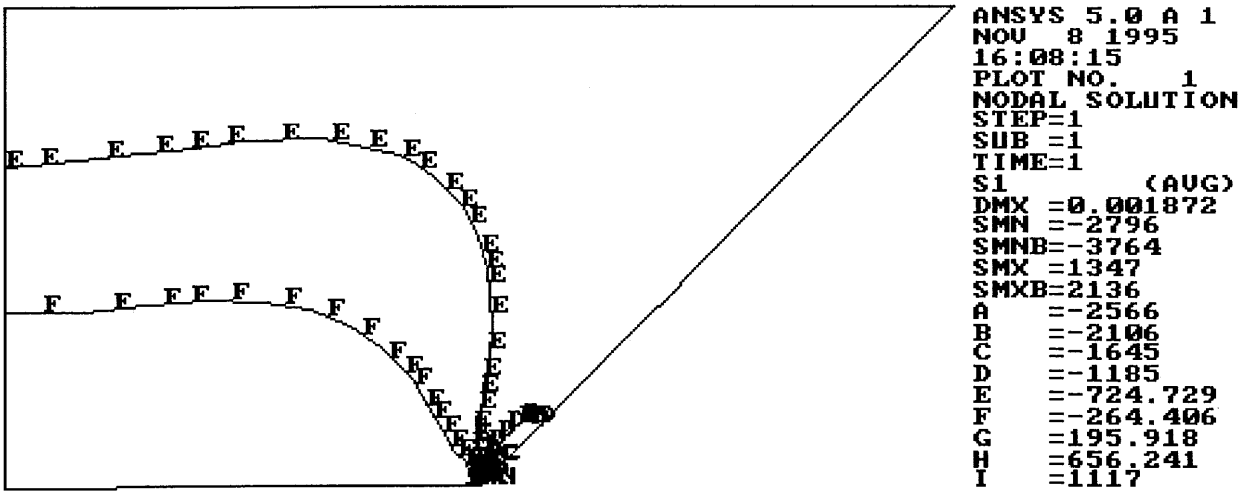

Figure 30. Acrylic conical frustum window (t/Di = 0.5) maximum principal stress contours at 1000 psi.

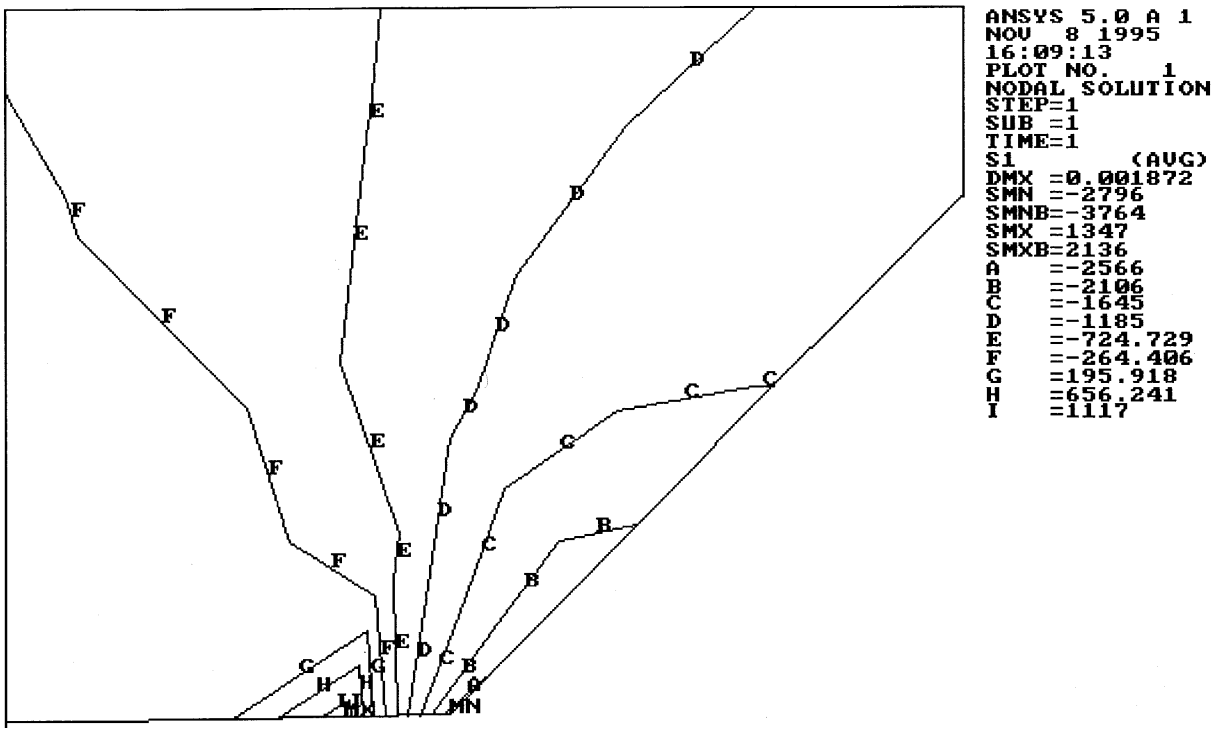

Figure 31. Acrylic conical frustum window (t/Di = 0.5) maxiimum principal stress contours at 1000 psi (low-pressure face edge detail).

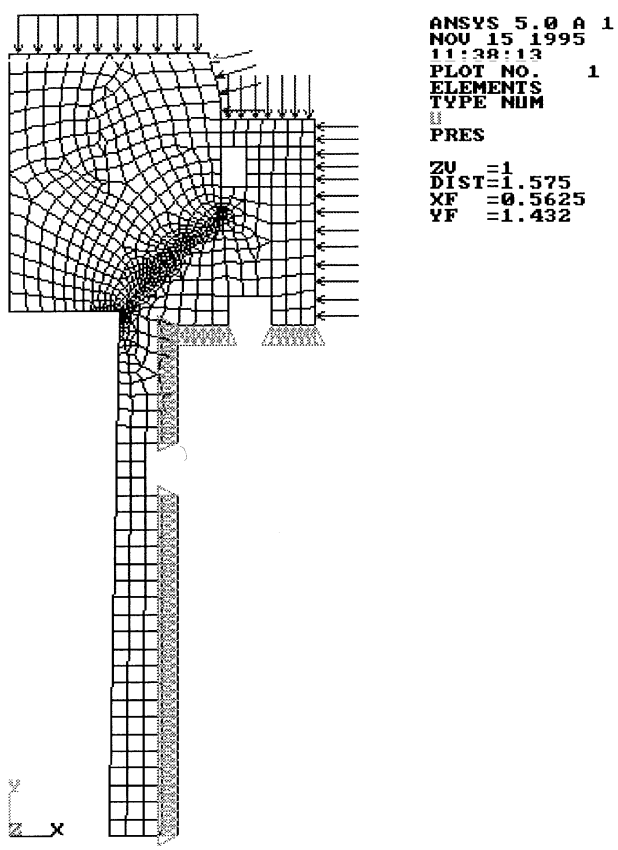

Figure 32. NRaD acrylic wide angle light pipe (w/o stem) FEA model.

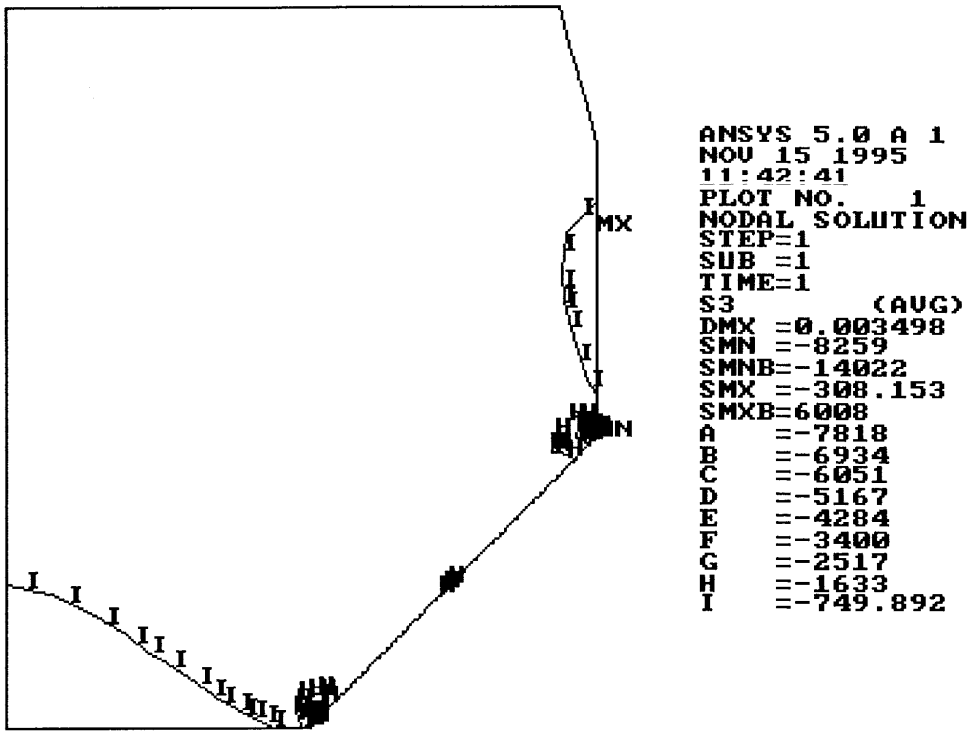

Figure 33. NRaD acrylic wide angle light pipe (w/o stem) minimum principal stress contours at 1000 psi.

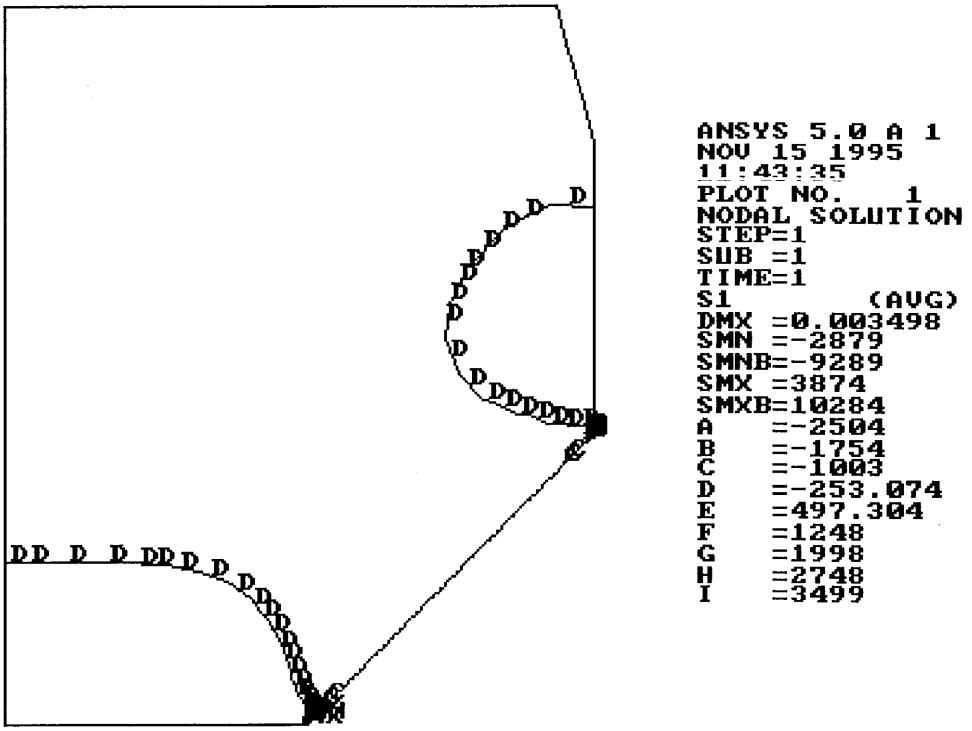

Figure 34. NRaD acrylic wide angle light pipe (w/o stem) maximum principal stress contours at 1000 psi.

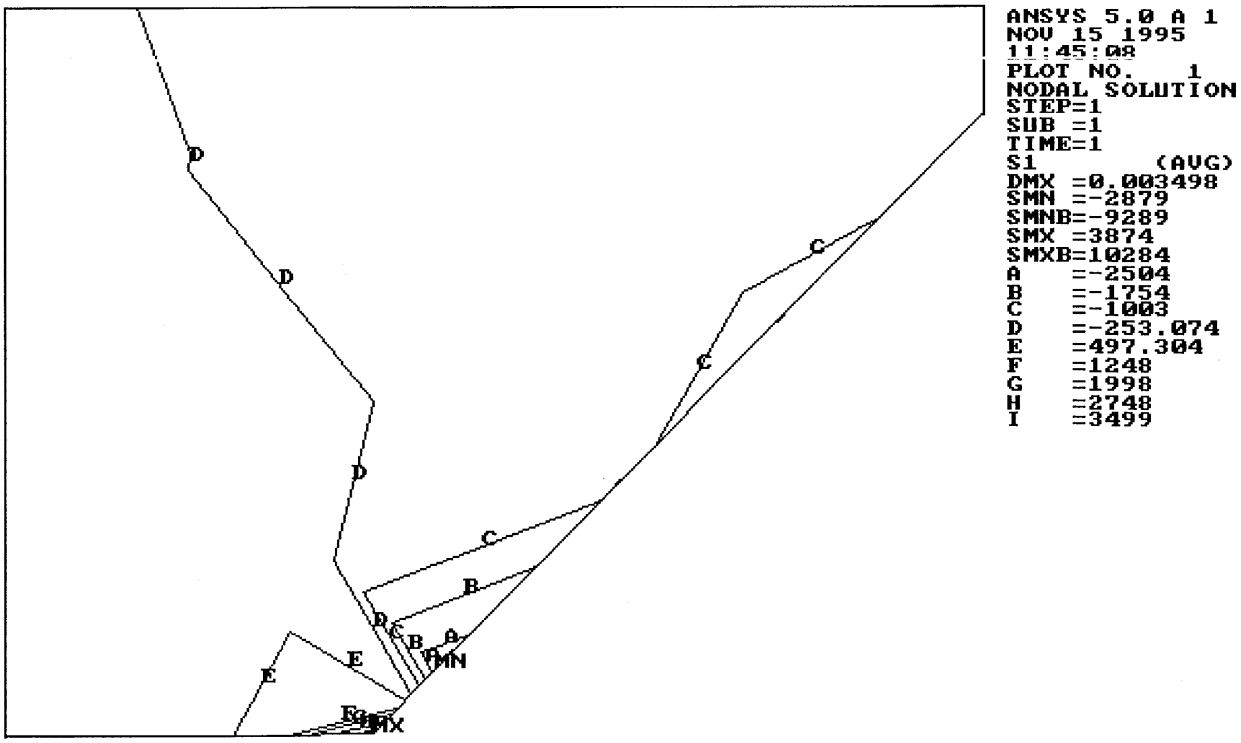

Figure 35. NRaD acrylic wide angle light pipe (w/o stem) maximum principal stress contours at 1000 psi (low-pressure face edge detail).

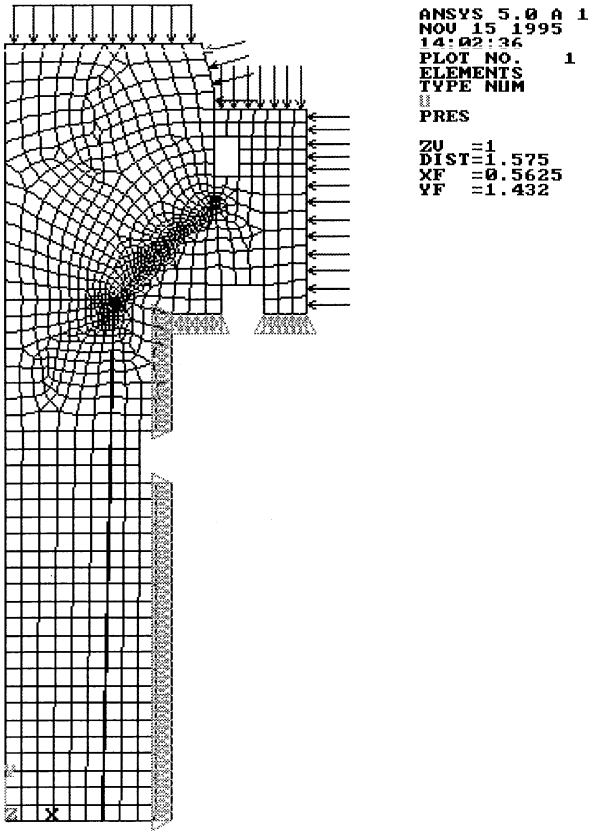

Figure 36. NRaD acrylic wide angle light pipe FEA model.

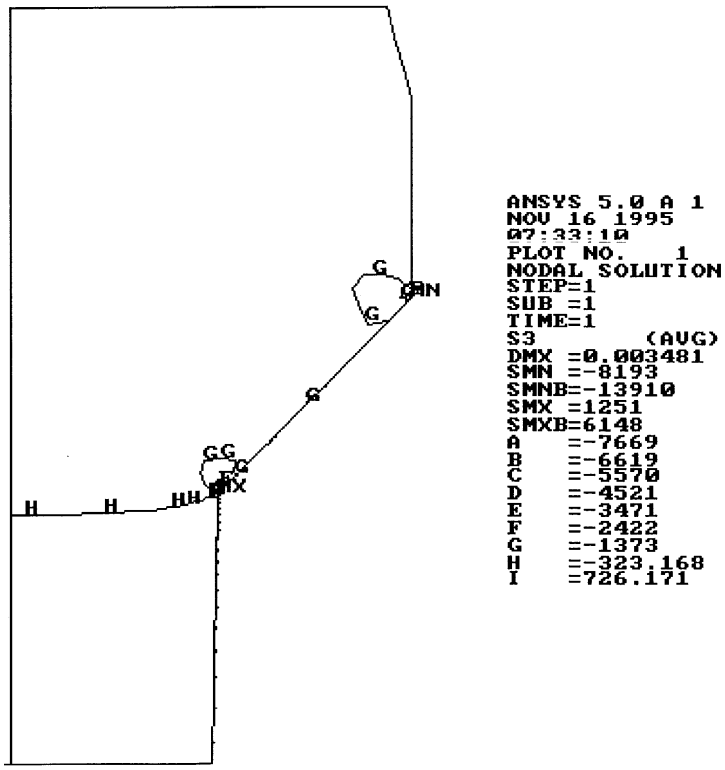

Figure 37. NRaD acrylic wide angle light pipe minimum principal stress contours at 1000 psi.

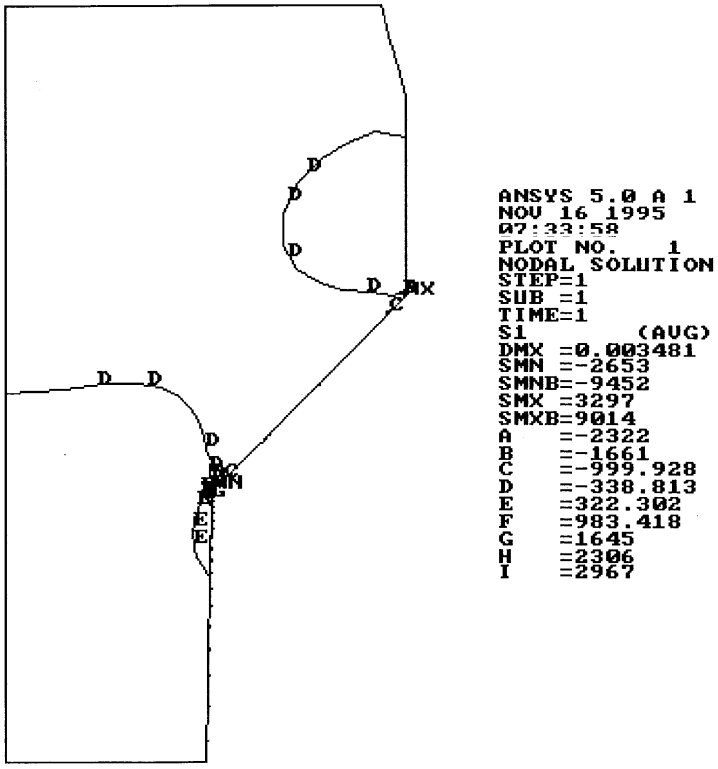

Figure 38. NRaD acrylic wide angle light pipe maximum principal stress contours at 1000 psi.

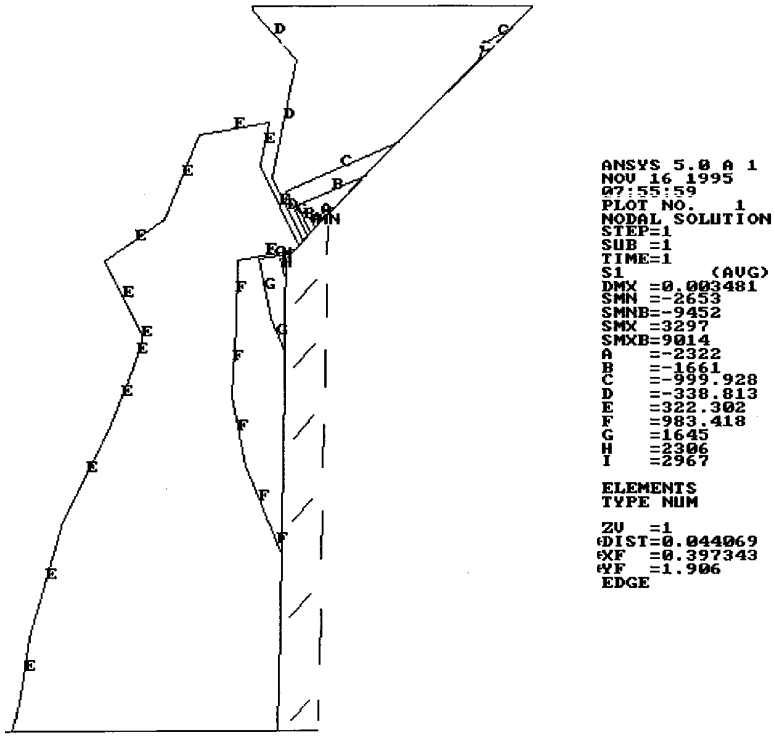

Figure 39. NRaD acrylic wide angle light pipe maximum principal stress contours at 1000 psi (stem/head junction detail).

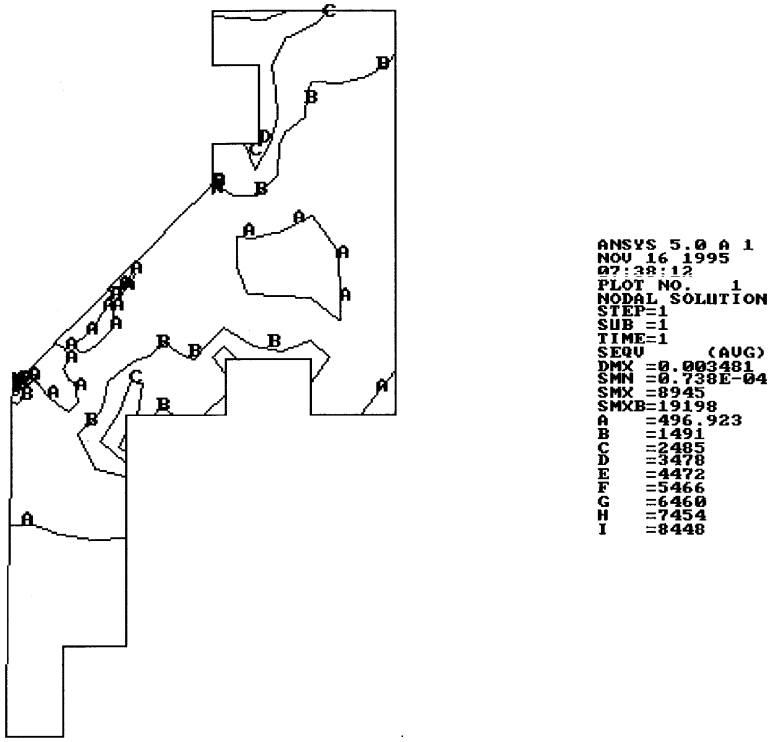

Figure 40. NRaD CRES adapter equivalent stress contours at 1000 psi.

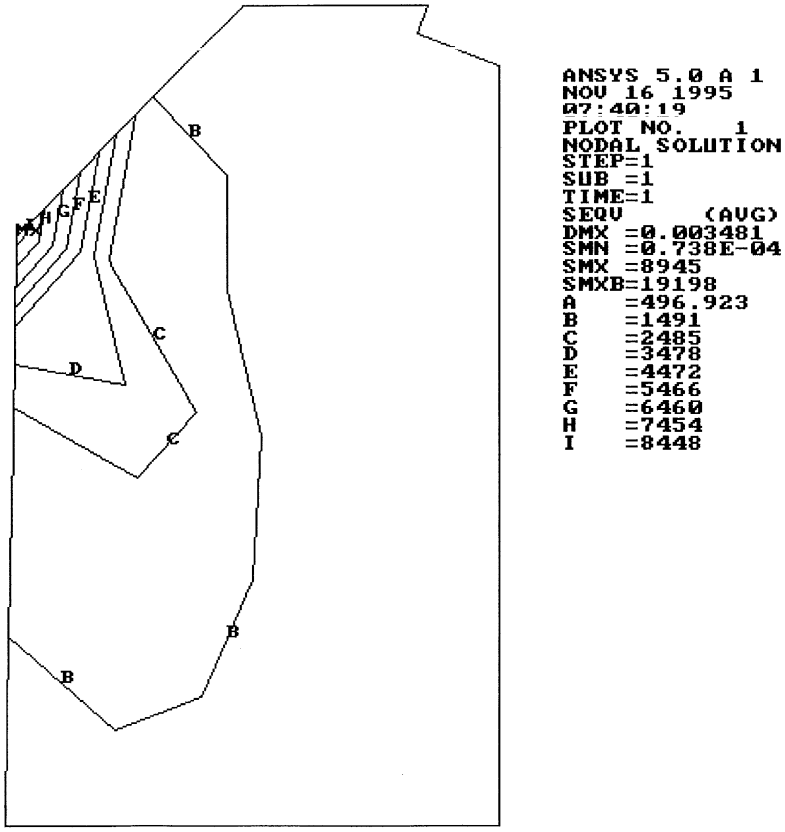

Figure 41. NRaD CRES adapter equivalent stress contours at 1000 psi (stem/head transition detail).

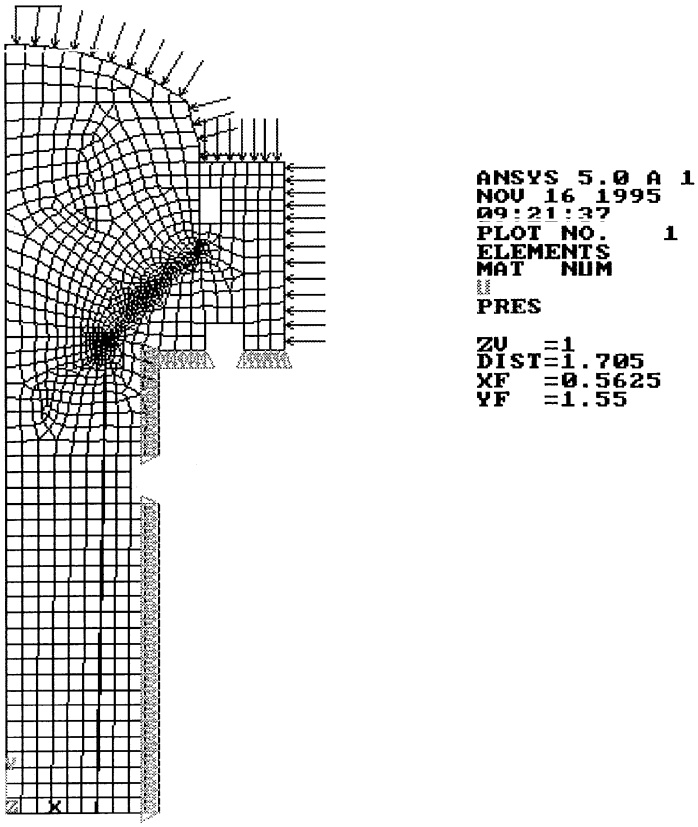

Figure 42. NRaD acrylic narrow angle light pipe FEA model.

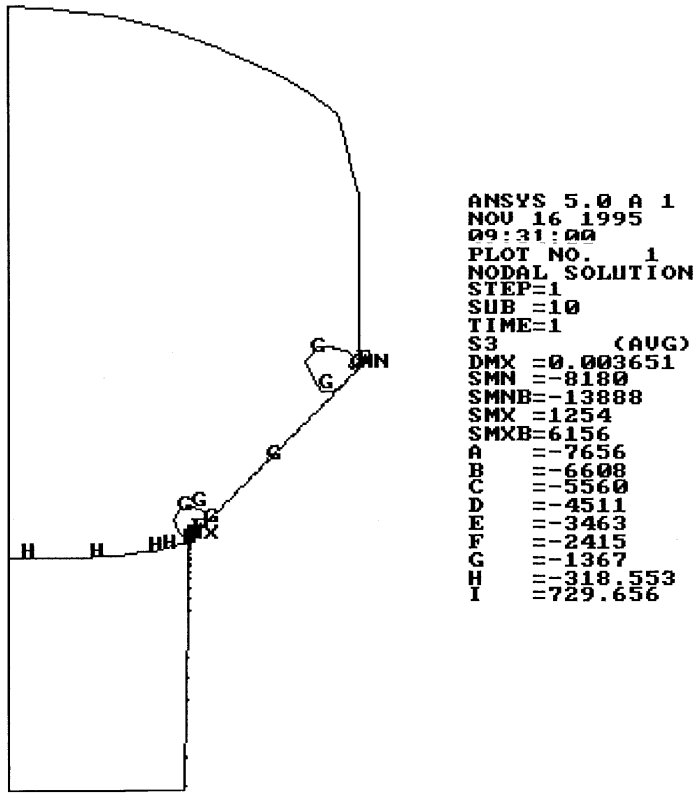

Figure 43. NRaD acrylic narrow angle light pipe minimum principal stress contours at 1000 psi.

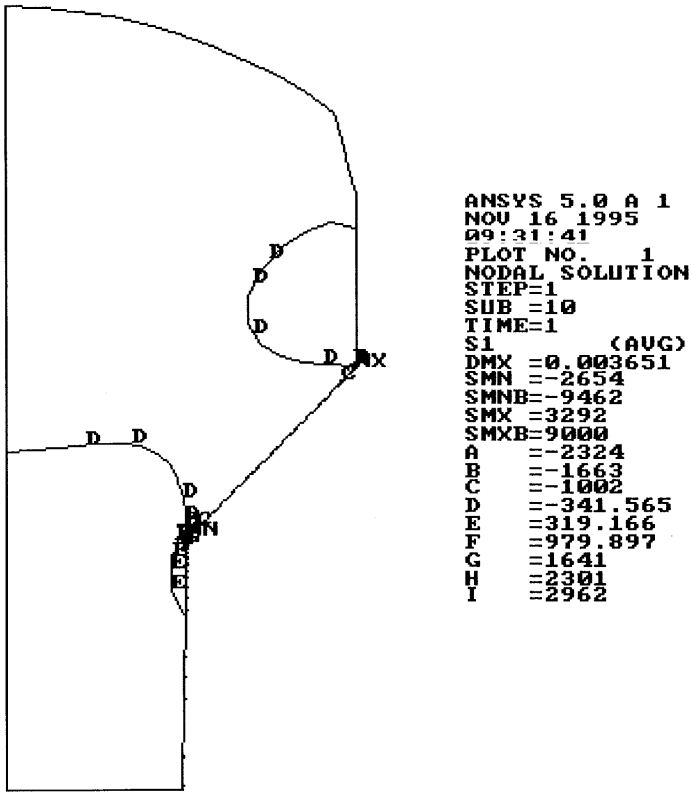

Figure 44. NRaD acrylic narrow angle light pipe maximum principal stress contours at 1000 psi.

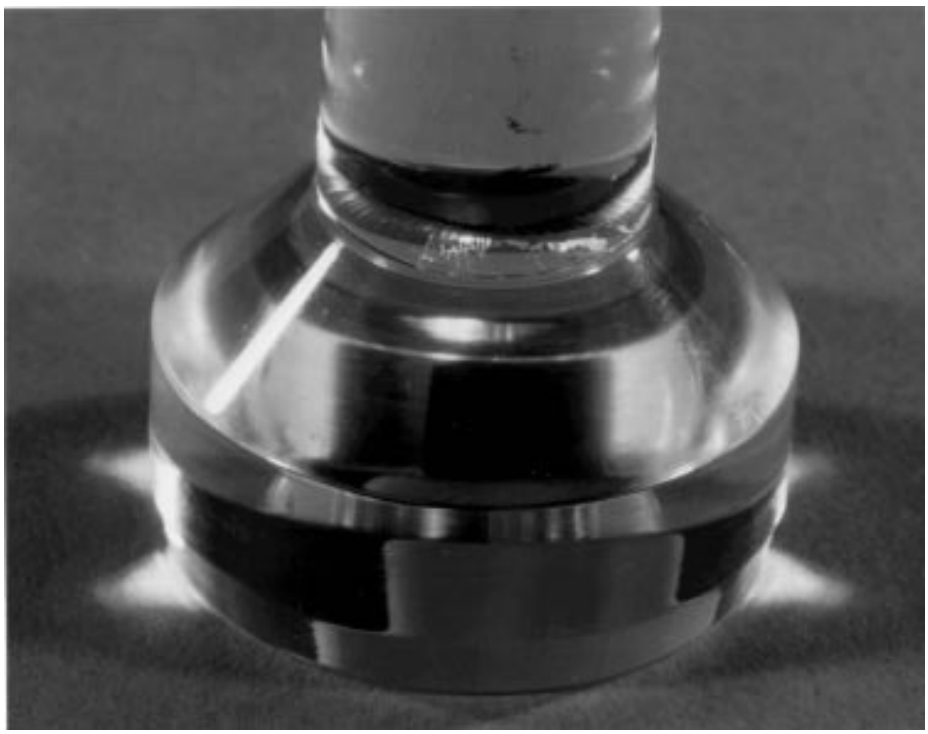

Figure 45. Stem/head junction crack in NRaD light pipe subjected to 20,000 psi pressure at 70°F, view 1.

Figure 46. Stem/head junction crack in NRaD light pipe subjected to 20,000 psi pressure at 70°F, view 2.

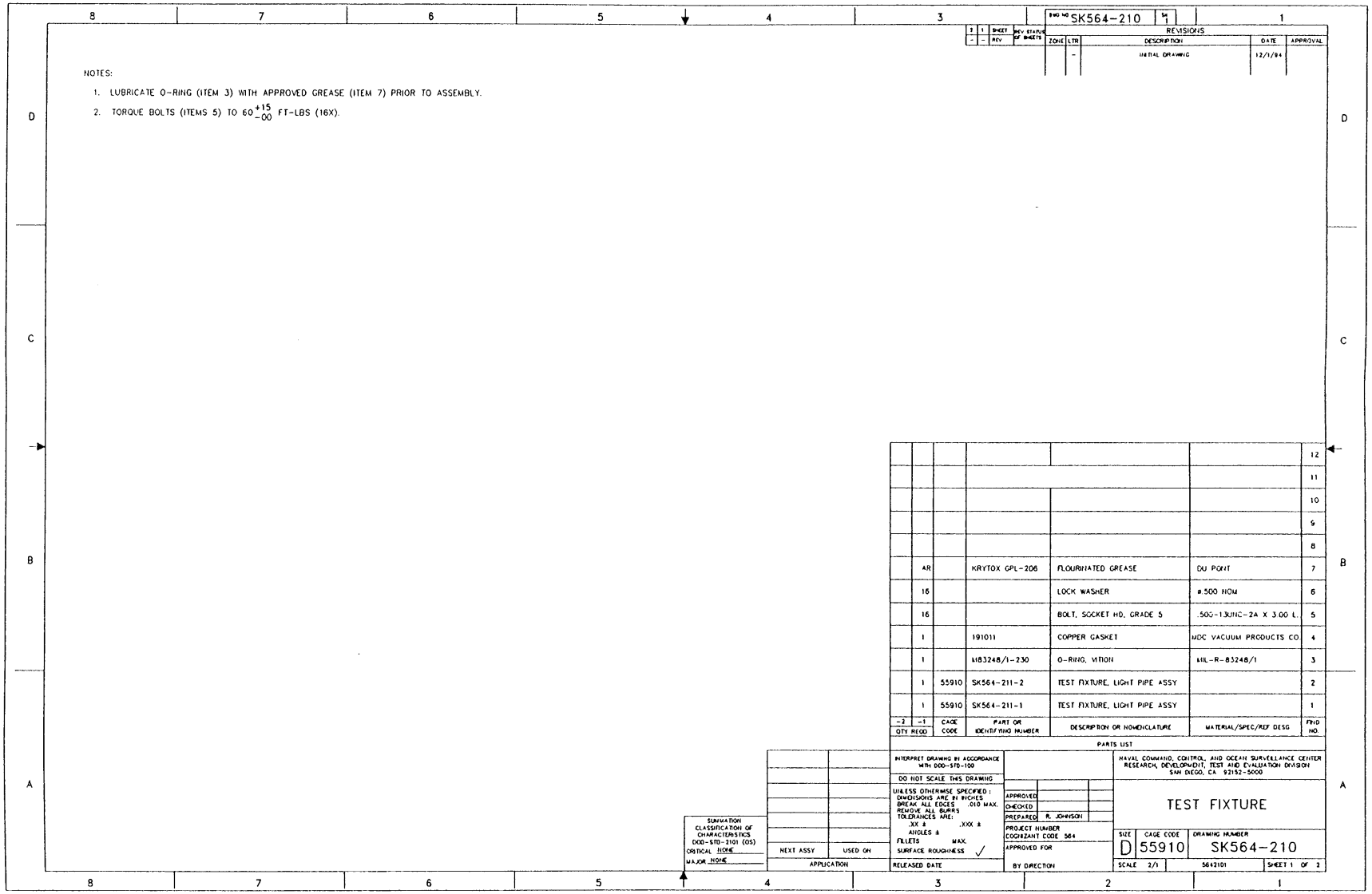

Figure 47. Helium leak test fixture for qualification/acceptance of NRaD light pipe assembly (sheet 1).

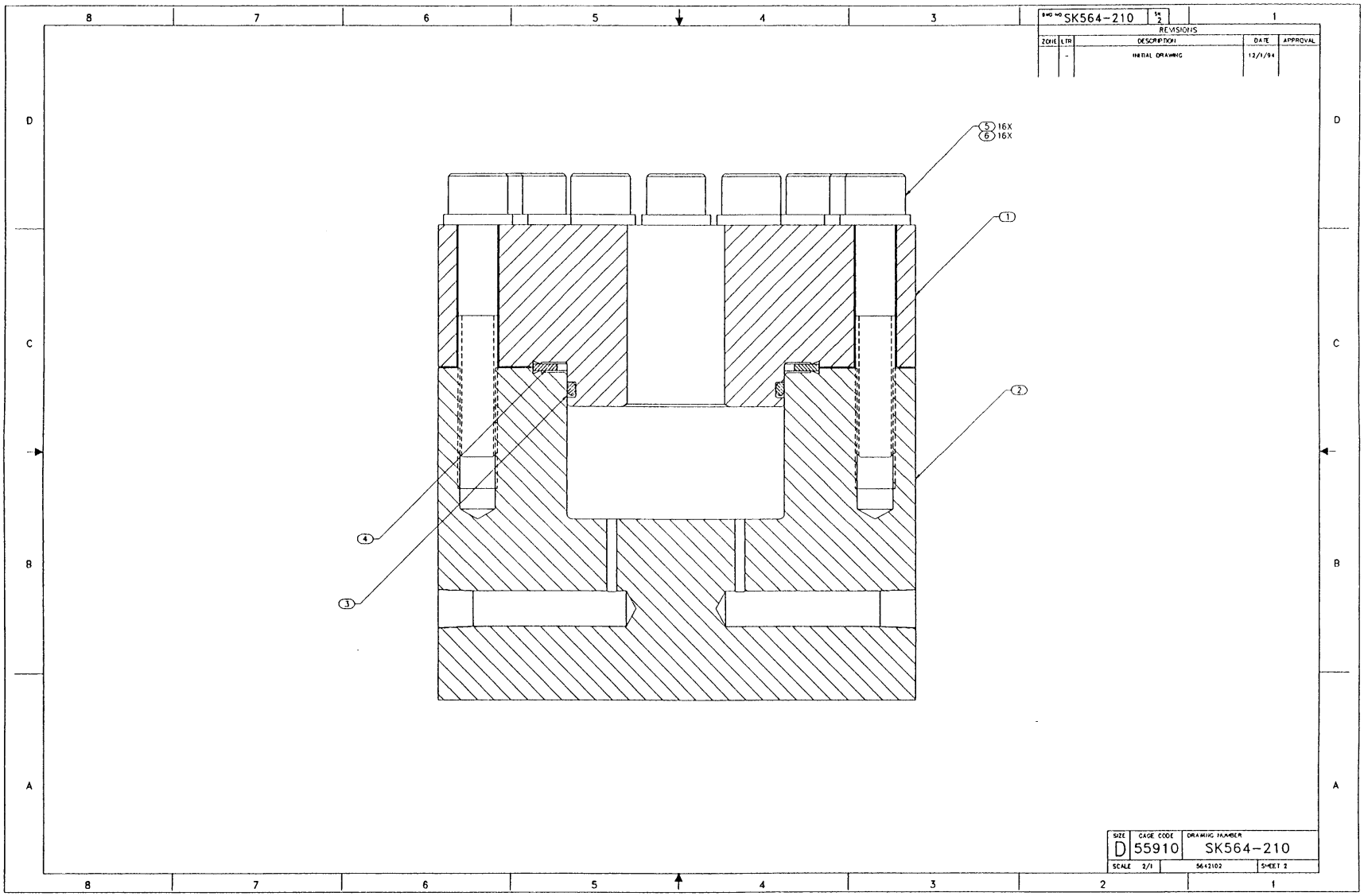

Figure 48. Helium leak test fixture for qualification/acceptance of NRaD light pipe assembly (sheet 2).

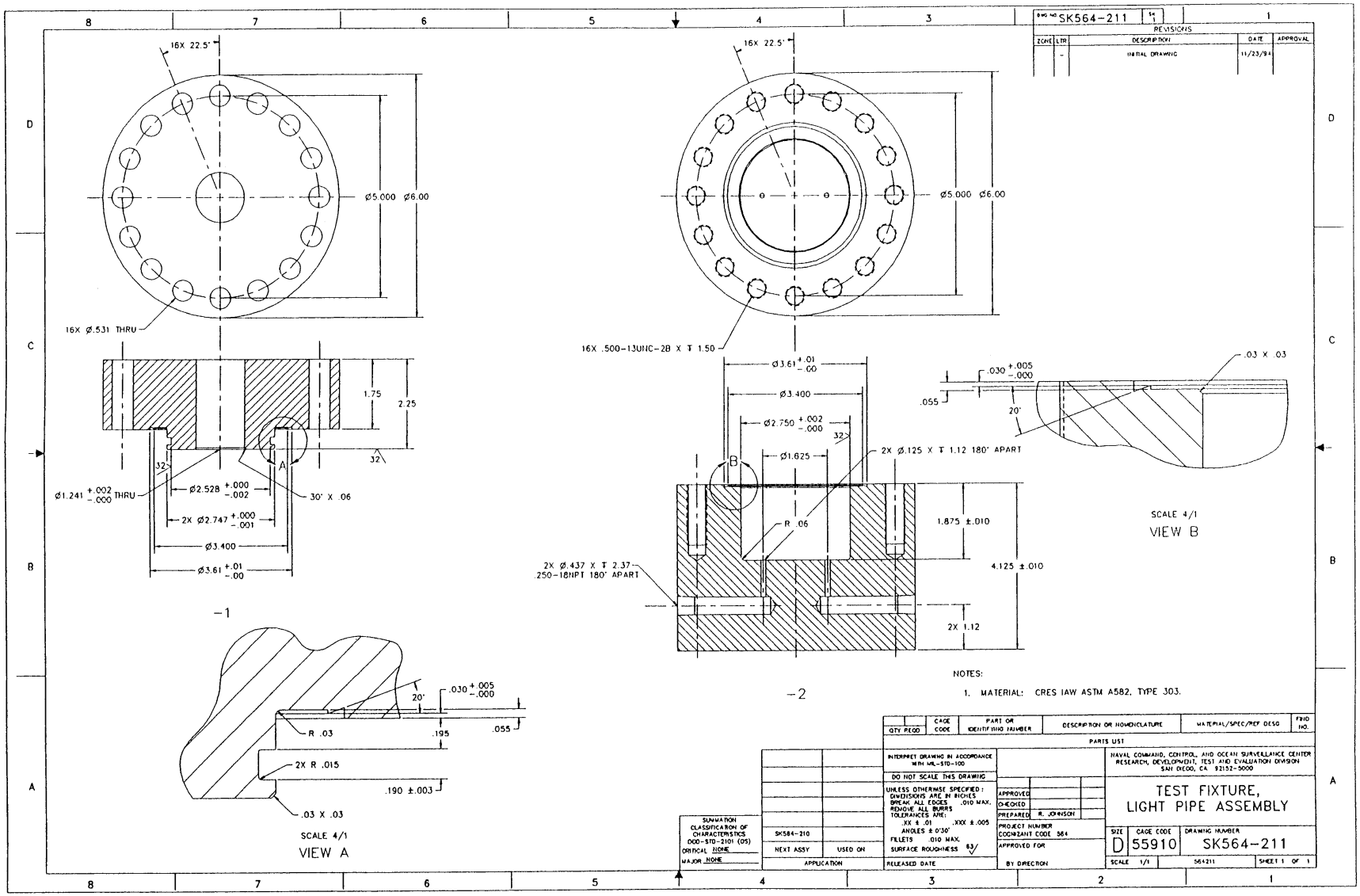

Figure 49. Helium leak test chamber details.

Figure 50. Quality control pressure test setup.

Figure 51. Quality control pressure test components.

Figure 52. Quality control pressure test axial displacement measurement setup.

Figure 53. Head detail of light pipe S/N 60 subjected to CPP test.

Figure 54. Head detail of light pipe S/N 61 subjected to CPP test.

APPENDIX A

FEA COMMAND LOG TO CONSTRUCT MODEL OF AN ACRYLIC CONICAL FRUSTUM WINDOW (t/Di = 0.5)

```
*
*  ACRYLIC CONICAL FRUSTUM WINDOW (t/Di = .5) FEA MODEL
*  COMMAND LOG
*
/BATCH
/COM,ANSYS REVISION  5.0            A 1     14:32:15    11/08/1995
/input,start   ,ans     ,C:\ANSYS50A\DOCU\              ,,,,,,,,,,,,,,,1
/FILNAM,CONFRUS3
/TITLE,ACRYLIC CONICAL FRUSTUM WINDOW (t/Di=.5) FEA MODEL
/PREP7
*
*  DEFINE ELEMENTS AND MATERIALS
*
ET,1,82,,,1
MP,EX,1,28000000.
MP,NUXY,1,.27
MP,EX,2,450000.
MP,NUXY,2,.35
*
*  DEFINE GEOMETRY AND MESH
*
K,1,.389,0.
K,2,1.5,0.
K,3,1.5,.998
K,4,.802,.998
K,5,.401,.597
K,6,.389,.585
/PNUM,KPOI,1
/PBC,ALL,,1
/PSF,PRES,,2
L,1,2
L,2,3
L,3,4
L,4,5
L,5,6
L,6,1
AL,1,2,3,4,5,6
/SHOW,VGA,,1
LPLOT
LESIZE,1,,,6,2
LESIZE,2,,,4,1
LESIZE,3,,,4,.5
LESIZE,5,,,24,.1
LESIZE,4,,,24,.1
LESIZE,5,,,2,2
LESIZE,6,,,12,4
LLIST
MAT,1
TYPE,1
```

```
AMESH,1
SAVE
K,7,0.,.597
K,8,.401,.597
K,9,.802,.998
K,10,0.,.998
L,7,8
L,8,9
L,9,10
L,10,7
AL,7,8,9,10
LESIZE,7,,,15,.1
LESIZE,8,,,24,10
LESIZE,9,,,14,1
LESIZE,10,,,6,1
MAT,2
AMESH,2
ALIST
*
*  COUPLE NODES OF ACRYLIC/STEEL CONTACT SURFACE IN DIRECTION
*  NORMAL TO CONTACT SURFACE
*
LOCAL,11,0,.401,.597,,45.
CSYS,11
LSEL,S,LINE,,4
LPLOT
LSEL,A,LINE,,8
NSLL,S,1
NROTAT,ALL
CPINTF,UY,.0005
NSEL,ALL
SAVE
FINISH
/SOLU
ANTYPE,STAT
*
*  DEFINE LOADS AND BOUNDARY CONDITIONS
*
LSEL,ALL
LSEL,S,LINE,,1
NSLL,S,1
D,ALL,ALL,0.
LSEL,ALL
NSEL,ALL
EPLOT
SFL,9,PRES,1000.
SBCLIST
SFTRAN
EPLOT
```

SAVE
SOLVE
FINISH

APPENDIX B

FEA COMMAND LOG TO CONSTRUCT MODEL OF NRAD WIDE ANGLE ACRYLIC LIGHT PIPE (W/O STEM)

```
*
*  NRaD WIDE ANGLE ACRYLIC LIGHT PIPE FEA MODEL COMMAND
*  LOG (CONICAL FRUSTUM HEAD ONLY)
*
/BATCH
/COM,ANSYS REVISION  5.0            A 1     08:59:24    11/15/1995
/input,start   ,ans     ,C:\ANSYS50A\DOCU\              ,,,,,,,,,,,,,,,1
/TITLE,MODNRAD4
/PREP7
*
*  DEFINE ELEMENTS, REAL CONSTANTS, AND MATERIALS
*
ET,1,82,,,1
ET,2,12
ET,3,14,,,2
R,1,45.,2.3e6,–.00141,0.
R,2,90.,2.3e6,–.001,0.
R,3,.5
MP,EX,1,28.E6
MP,NUXY,1,.27
MP,EX,2,450000.
MP,NUXY,2,.35
/SHOW,VGA,,1
/PNUM,KPOI,1
*
*  DEFINE GEOMETRY AND MESH
*
K,1,.3653,0.
K,2,.62,0.
K,3,.62,1.247
K,4,.499,1.247
K,5,.499,1.44
K,6,.62,1.44
K,7,.62,1.87
K,8,.8045,1.87
K,9,.8045,1.974
KPLOT
K,10,.9645,1.974
K,11,.9645,1.87
K,12,1.125,1.87
K,13,1.125,2.374
K,14,1.125,2.52
K,15,1.125,2.62
K,16,.781,2.62
K,17,.781,2.52
```

```
K,18,.869,2.52
K,19,.869,2.374
K,20,.781,2.374
K,22,.781,2.3
K,23,.406,1.925
K,24,.3957,1.44
K,25,.3917,1.247
K,26,.9645,2.374
SAVE
KLIST
L,1,2
L,2,3
L,3,4
L,4,25
L,25,1
LESIZE,1,,,4
LESIZE,2,,,20
LESIZE,3,,,2
LESIZE,4,,,2
LESIZE,5,,,20
AL,1,2,3,4,5
LCCAT,3,4
MAT,1
TYPE,1
AMESH,1
L,4,5
L,5,24
L,24,25
LESIZE,7,,,3
LESIZE,8,,,2
LESIZE,9,,,3
AL,7,8,9,4
AMESH,2
L,5,6
L,6,7
L,7,23
L,23,24
LESIZE,10,,,2
LESIZE,11,,,7
LESIZE,12,,,8,.1
LESIZE,13,,,18,10
AL,10,11,12,13,8
AMESH,3
L,7,8
L,8,9
```

```
L,9,22
L,22,23
LESIZE,14,,,3
LESIZE,15,,,2
LESIZE,16,,,11,.1
LESIZE,17,,,35
AL,14,15,16,17,12
AMESH,4
L,9,10
L,10,26
L,26,19
L,19,20
L,20,22
LESIZE,18,,,3
LESIZE,19,,,6
LESIZE,20,,,2
LESIZE,21,,,2
LESIZE,22,,,4,.1
AL,18,19,20,21,22,16
AMESH,5
L,10,11
L,11,12
L,12,13
L,13,26
LESIZE,23,,,2
LESIZE,24,,,3
LESIZE,25,,,8
LESIZE,26,,,3
AL,23,24,25,26,19
LCCAT,19,23
AMESH,6
L,13,14
L,14,18
L,18,19
LESIZE,28,,,3
LESIZE,29,,,5
LESIZE,30,,,3
AL,28,29,30,20,26
LCCAT,20,26
AMESH,7
L,14,15
L,15,16
L,16,17
L,17,18
LESIZE,32,,,2
```

```
LESIZE,33,,,7
LESIZE,34,,,2
LESIZE,35,,,2
AL,32,33,34,35,29
LCCAT,29,35
AMESH,8
SAVE
/AUTO
EPLOT
ALIST
K,27,0.,1.922
K,28,.401,1.922
K,29,.405,1.926
K,30,.78,2.301
K,31,.78,2.374
K,32,.78,2.52
K,33,.78,2.62
K,34,.78,2.684
K,35,.7318,2.864
K,36,0.,2.864
L,27,28
L,28,29
L,29,30
L,30,31
L,31,32
L,32,33
L,33,34
L,34,35
L,35,36
L,36,27
LESIZE,37,,,15,.1
LESIZE,38,,,1
LESIZE,39,,,35
LESIZE,40,,,4,10
LESIZE,41,,,3
LESIZE,42,,,2
LESIZE,43,,,1
LESIZE,44,,,3
LESIZE,45,,,10
LESIZE,46,,,13
AL,37,38,39,40,41,42,43,44,45,46
MAT,2
AMESH,9
SAVE
/AUTO
```

```
EPLOT
ALIST
/SHOW,VGA
/PNUM,MAT,1
/NUM,1
*
*  APPLY GAP ELEMENTS (PERFORMED INTERACTIVELY ON SCREEN,
*  COMMANDS NOT SHOWN HERE)
*
REAL,1
TYPE,2
REAL,2
SAVE
/AUTO
EPLOT
*
*  SUPERIMPOSE SOFT SPRING ELEMENTS OVER GAP ELEMENTS
*  TO PROVIDE STABILITY
*
EALL
ESEL,S,TYPE,,2
ESEL,R,REAL,,1
EGEN,2,0,ALL,,,,1,2
ESEL,ALL
ESEL,S,TYPE,,2
ESEL,R,REAL,,2
EGEN,2,0,ALL,,,,1,1
ESEL,TYPE,3
EALL
EPLOT
SAVE
FINISH
/SOLU
ANTYPE,STAT
*
*  DEFINE LOADS AND BOUNDARY CONDITIONS
*
LSEL,S,LINE,,2
LSEL,A,LINE,,11
LPLOT
NSLL,S,1
NPLOT
D,ALL,UX,0.
LSEL,ALL
NSEL,ALL
```

```
LSEL,S,LINE,,14
LSEL,A,LINE,,24
NSLL,S,1
NPLOT
D,ALL,UY,0.
LSEL,ALL
NSEL,ALL
/PBC,U,1
/PSF,PRES,,2
/AUTO
EPLOT
SFL,25,PRES,1000.
SFL,28,PRES,1000.
SFL,32,PRES,1000.
SFL,33,PRES,1000.
SFL,43,PRES,1000.
SFL,44,PRES,1000.
SFL,45,PRES,1000.
SBCLIST
SBCTRAN
EPLOT
LNSRCH,ON
SOLVE
FINISH
```

APPENDIX C

LIGHT PIPE ASSEMBLY QUALIFICATION/ACCEPTANCE TESTS

SH. 1

DWG. NO. 0128934

APPLICATION		REVISIONS			
NEXT ASSY	USED ON	LTR	DESCRIPTION	DATE	APPROVED
0128932	LIGHT PIPE ASSY	–	INITIAL DRAWING	2/1/95	
		1	INTEGRATE COMMENTS	2/9/95	
		2	UPDATE CLEANING AND ASSEMBLY NOTES	4/25/95	

REV STATUS OF SHEETS											
REV	2	1	2	1	1	1	2	1	1	–	
SHEET	1	2	3	4	5	6	7	8	9	10	

INTERPRET DRAWING IN ACCORDANCE WITH DOD-STD-100

NAVAL COMMAND, CONTROL, AND OCEAN SURVEILLANCE CENTER
RESEARCH, DEVELOPMENT, TEST AND EVALUATION DIVISION
SAN DIEGO, CA 92152-5000

UNLESS OTHERWISE SPECIFIED DIMENSIONS ARE IN INCHES.
GENERAL TOLERANCES:
XX DECIMALS ± | XXX DECIMALS ± | ANGLES ±

APVD
CHKD R. JOHNSON
PREP T. PICKERING

LIGHT PIPE ASSEMBLY, QUALIFICATION/ACCEPTANCE TESTS

PROJ NO

COG CODE 564

APPROVED FOR

BY DIRECTION

RLSE DATE

SIZE A | CAGE CODE 55910 | DWG. NO. 0128934

SCALE: NONE | 01289341 | SHEET 1 OF 10

1.0 SCOPE

This specification provides qualification/acceptance testing requirements for Light Pipe Assemblies, 55910-0128932-1 and 55910-0128932-2. These Light Pipe Assemblies are used to transmit light from an externally mounted light source through the pressure boundary of a man-rated hyperbaric chamber for interior illumination. Light Pipe Assemblies 55910-0128932-1 and 55910-0128932-2 are intended for a maximum working pressure of 1000 pounds per square inch (psi) with a light source that does not allow the temperature of the acrylic Light Pipe head to exceed 150 degrees Fahrenheit (°F). Each Light Pipe Assembly includes an acrylic Light Pipe, 55910-0128930-1 or 55910-0128930-2, a CRES Adapter, 55910-0128931, and a CRES Retainer, 55910-0128929. Prior to this design being accepted for use in man-rated hyperbaric chambers, the Light Pipe Assemblies shall be tested per the requirements of this specification. The qualification/acceptance testing consists of temperature monitoring, pressure testing, shock testing, and helium leak testing.

2.0 APPLICABLE DOCUMENTS

The following documents form a part of this specification to the extent specified herein.

NUMBER	TITLE
55910-0128929	Retainer, Light Pipe
55910-0128930	Light Pipe
55910-0128931	Adapter, Light Pipe
55910-0128932	Light Pipe Assembly
ASME PVHO-1	Safety Standard for Pressure Vessels for Human Occupancy
82126-529-5162825	Pressure Chamber Lights Specification Control Drawing
MIL-S-901	Shock Tests, High Impact, Shipboard Machinery, Equipment, and Systems, Requirements for
STR-PIT-TS23318A/01	Pressure Chamber Light Shock Test

3.0 SPECIFIC TEST SCOPE (TEMPERATURE MONITORING TEST)

The temperature of the conical frustum head of the acrylic Light Pipe, 55910-0128930-1 and 55910-0128930-2, shall be monitored during normal operation of the Light Pipe Assembly, 55910-0128932-1 or 55910-0128932-2, with a 24 volt direct current (VDC) power source. The maximum ambient temperature for testing of the Light Pipe Assembly shall be

100 °F. Temperature monitoring must show that during operation of the Light Pipe Assembly using a light source IAW 82126-529-5162825, the temperature of the acrylic Light Pipe conical frustum head does not rise more than 50 °F above the ambient temperature. This test shall ensure that the maximum operating design temperature of 150 °F is not exceeded IAW para. 2-1.3(a) of ASME PVHO-1 for the acrylic Light Pipe.

3.1 REQUIREMENTS

3.1.1 The supplier shall perform the following qualification/acceptance temperature monitoring test on Light Pipe Assemblies 55910-0128932-1 and 55910-0128932-2.

3.1.2 One Light Pipe Adapter, 55910-0128931, shall be modified with a single hole drilled in the approximate location shown in figure 1. The diameter of the hole shall be kept as small as practical to allow for insertion of a thermocouple wire. This modified Light Pipe Adapter shall be used to monitor operating temperatures for both Light Pipes 55910-0128930-1 and 55910-0128930-2. All components of the Light Pipe Assembly shall be cleaned and assembled IAW notes 2 and 3 of 55910-0128932. A thermocouple shall be installed through the hole location shown in figure 1 such that contact is made with the conical bearing surface of the acrylic Light Pipe head. The resulting Light Pipe Assembly shall than be mated with a light source IAW 82126-529-5162825.

3.1.3 The light source shall be powered with 24 VDC and temperatures of the conical bearing surface of the acrylic Light Pipe and of the ambient air shall be recorded every 15 minutes. When the temperature rise of the acrylic Light Pipe head decreases to less than 1 °F per hour, (i.e. steady state temperature has been reached) the test shall be terminated.

3.1.4 An increase in temperature of the acrylic Light Pipe head over the ambient air temperature that is greater than 50 °F shall be cause for rejection of the Light Pipe Assembly.

3.1.5 Qualification/acceptance temperature monitoring test records shall contain the following documentation:

a. Light Pipe part/serial number.
b. Retainer part/serial number.
c. Adapter part/serial number.
d. Maximum design temperature of assembly.
e. Description of test setup.
f. Thermocouple; manufacturer name, model number, serial number, range, calibration date, calibration due date, and accuracy.
g. Records of light source voltage, ambient air temperature, steady state temperature of acrylic Light Pipe head.
h. Date of test, name and address of testing laboratory.
i. Test supervisor, signature, and date.

4.0 SPECIFIC TEST SCOPE (PRESSURE TEST)

The Light Pipe Assembly 55910-0128932-2 shall be subjected to Short Term Proof Pressure (STPP) tests, IAW para. 2-2.6.4 of ASME PVHO-1, and Short Term Critical Pressure (STCP) tests IAW para. 2-2.5.2 of ASME PVHO-1. STPP testing requires a demonstration that a quantity of five Light Pipes, 55910-0128930-2, can withstand in excess of four times the 1000 psi design pressure at 150 °F design temperature. STCP testing requires a demonstration that a quantity of five Light Pipes, 55910-0128930-2, can withstand in excess of 16 times the 1000 psi design pressure at 75 °F. These tests are intended to demonstrate that the Light Pipe Assemblies, 55910-0128932-1 and 55910-0128932-2, are adequate for service in man-rated hyperbaric chambers providing the working pressure does not exceed 1000 psi, and the temperature of the conical frustum head of the acrylic Light Pipe does not rise above 150 °F.

4.1 REQUIREMENTS

4.1.1 The supplier shall perform the following qualification/acceptance pressure tests on Light Pipe Assemblies 55910-0128932-2.

4.1.2 All components of each tested Light Pipe Assembly shall be cleaned and assembled IAW notes 2 and 3 of 55910-0128932.

4.1.3 Qualification/Acceptance STPP Testing

4.1.3.1 Five Light Pipes, 55910-0128930-2, shall be pressure tested IAW 2-2.6.4 of ASME PVHO-1 except as otherwise noted here. Each Light Pipe Assembly shall be proof tested using water to 4000 psi + 250 psi - 0 psi for 5 minutes + 5 minutes - 0 minutes with the temperature of all components stabilized at 150 °F + 5 °F - 0 °F using a temperature controlled pressure vessel. The Light Pipe Assembly shall be installed in the vessel using a flat washer and a 1.000-14UNS-2B hex nut (items 17 & 18 of 59910-0128932). The hex nut shall be torqued to 45 ft-lb. ± 5 ft-lb. Pressurization and depressurization rates before and after testing shall not exceed 650 psi/minute.

4.1.3.2 Catastrophic failure or leakage during any of the STPP tests shall be cause for rejection of the Light Pipe Assembly.

4.1.3.3 Qualification/acceptance STPP testing records shall be based on the pressure test report included in Appendix A, Enclosure 4, of ASME PVHO-1 and shall contain the following information:

a. Light Pipe part/serial number.
b. Retainer part/serial number.
c. Adapter part/serial number.
d. Description of test setup.
e. Gage, primary & secondary; manufacturer name, model number, serial number, range, calibration date, calibration due date, and accuracy.
f. Start pressure, start time, start temperature, finish pressure, finish time, and finish temperature.
g. Pressure test observations on leakage and catastrophic failure.
h. Observations from post pressure test inspection of the acrylic Light Pipe for residual deformation, surface crazing or cracking.
i. Test supervisor, signature, and date.

4.1.4 Qualification/Acceptance STCP Testing

4.1.4.1 Five light pipes, 55910-0128930-2, shall be pressure tested IAW 2-2.5.2 of ASME PVHO-1 except as otherwise noted here. Each Light Pipe Assembly

shall be proof tested using water to a minimum pressure of 16,000 psi for 5 minutes + 5 minutes - 0 minutes with the temperature of all components stabilized at 75 °F + 2 °F - 5 °F using a temperature controlled pressure vessel. The Light Pipe Assembly shall be installed in the vessel using a flat washer and a 1.000-14UNS-2B hex nut (items 17 & 18 of 55910-0128932). The hex nut shall be torqued to 45 ft-lb. ± 5 ft-lb. Pressurization and depressurization rates before and after testing shall not exceed 650 psi/minute.

4.1.4.2 Catastrophic failure or leakage during any of the STCP tests shall be cause for rejection of the Light Pipe Assembly.

4.1.4.3 Qualification/acceptance STCP testing records shall be based on the pressure test report included in Appendix A, Enclosure 4, of ASME PVHO-1 and shall contain the following information:

a. Light Pipe part/serial number.
b. Retainer part/serial number.
c. Adapter part/serial number.
d. Description of test setup.
e. Gage, primary & secondary; manufacturer name, model number, serial number, range, calibration date, calibration due date, and accuracy.
f. Start pressure, start time, start temperature, finish pressure, finish time, and finish temperature.
g. Pressure test observations on leakage and catastrophic failure.
h. Observations from post pressure test inspection of the acrylic Light Pipe for residual deformation, surface crazing of cracking.
i. Test supervisor, signature, and date.

5.0 SPECIFIC TEST SCOPE (SHOCK TEST)

Light Pipe Assemblies 55910-0128932-1 and 55910-0128932-2 mated with a light source IAW 82126-529-5162825 shall be shock tested IAW MIL-S-901, Grade B criteria. This test shall ensure gas pressure integrity is maintained across the Light Pipe Assembly during and after the shock test and that all components of the Light Pipe unit remain intact during and after the shock test to avoid becoming missile hazards.

5.1 REQUIREMENTS

5.1.1 The supplier shall perform the following qualification/acceptance shock test on Light Pipe Assemblies 55910-0128932-1 and 55910-0128932-2.

5.1.2 Prior to the shock test, all components of the Light Pipe Assembly shall be cleaned and assembled IAW notes 2 and 3 of 55910-0128932. The Light Pipe Assembly shall be installed on the shock test fixture using a flat washer and a 1.000-14UNS-2B hex nut (items 17 & 18 of 55910-0128932). The hex nut shall be torqued to 45 ft-lb. ± 5 ft-lb.

5.1.3 Each Light Pipe unit (Light Pipe Assembly, 55910-0128932-1 or 55910-0128932-2 with light source IAW 82126-529-5162825), shall be qualified as a lightweight, Grade B, Class I item IAW MIL-S-901 per the procedures of pre installation test STR-PIT-TS23318A/01.

5.1.4 Failure of the Light Pipe Assembly to maintain pressure during or after the shock test or failure of any component of the Light Pipe unit to remain securely foundated during the shock test shall be cause for rejection of the Light Pipe Assembly.

5.1.5 Qualification/acceptance shock test records shall contain the following documentation:

a. Completion of pre installation test procedure STR-PIT-TS23318A/01 in its entirety.

6.0 SPECIFIC TEST SCOPE (HELIUM LEAK TEST)

Light Pipe Assemblies 55910-0128932-1 and 55910-0128932-2 shall be pressurized with helium for a period of 24 hours and monitored to ensure that leakage of helium through the Light Pipe Assembly does not exceed 10^{-3} cubic centimeters per second (cc/sec).

6.1 REQUIREMENTS

6.1.1 The supplier shall perform the following qualification/acceptance helium leak test on Light Pipe Assemblies 55910-0128932-1 and 55910-0128932-2.

6.1.2 All components comprising the Light Pipe Assembly shall be cleaned and assembled IAW notes 2 and 3 of 55910-0128932. The Light Pipe Assembly shall be installed in a pressure vessel capable of

containing 460 psi helium with no apparent leakage. The Light Pipe Assembly shall be installed in the vessel using a flat washer and a 1.000-14UNS-2B hex nut (items 17 & 18 of 55910-0128932). The hex nut shall be torqued to 45 ft-lb. ± 5 ft-lb. The pressure vessel shall have instrumentation capable of measuring the amount of helium leakage from the vessel chamber.

6.1.3 The Light Pipe Assembly shall be pressurized to 450 psi + 10 psi - 10 psi and maintained within this pressure range for a period of not less than 24 hours. The amount of helium leakage through the Light Pipe Assembly during the duration of the pressure test shall be monitored.

6.1.4 For man-rated hyperbaric chambers with a working pressure exceeding 450 psi, the helium leak test should be performed at the working pressure specified for that chamber.

6.1.5 An average leakage rate exceeding 10^{-3} cc/sec over the course of the helium leak test shall be cause for rejection of the Light Pipe Assembly.

6.1.6 Qualification/acceptance helium leak test records shall contain the following documentation:

a. Light Pipe part/serial number.
b. Retainer part/serial number.
c. Adapter part/serial number.
d. Description of test setup.
e. Leakage instrumentation; manufacturer name, model number, serial number, range, calibration date, calibration due date, and accuracy.
f. Records of helium test pressure throughout course of helium leak test including; start pressure, start time, finish pressure, and finish time.
g. Post pressure test observations on amount of helium leakage.
h. Date of test, name and address of testing laboratory.
i. Test supervisor, signature, and date.

7.0 NOTES

7.1 All Light Pipe Assembly components used for any of the qualification/acceptance tests covered by this specification shall be suitably marked to ensure that

they can not be subsequently placed in service in man-rated hyperbaric chambers.

7.2 The supplier shall provide documentation to the government that the Light Pipe Assembly design has met the requirements of this specification prior to delivery of any Light Pipe Assembly components.

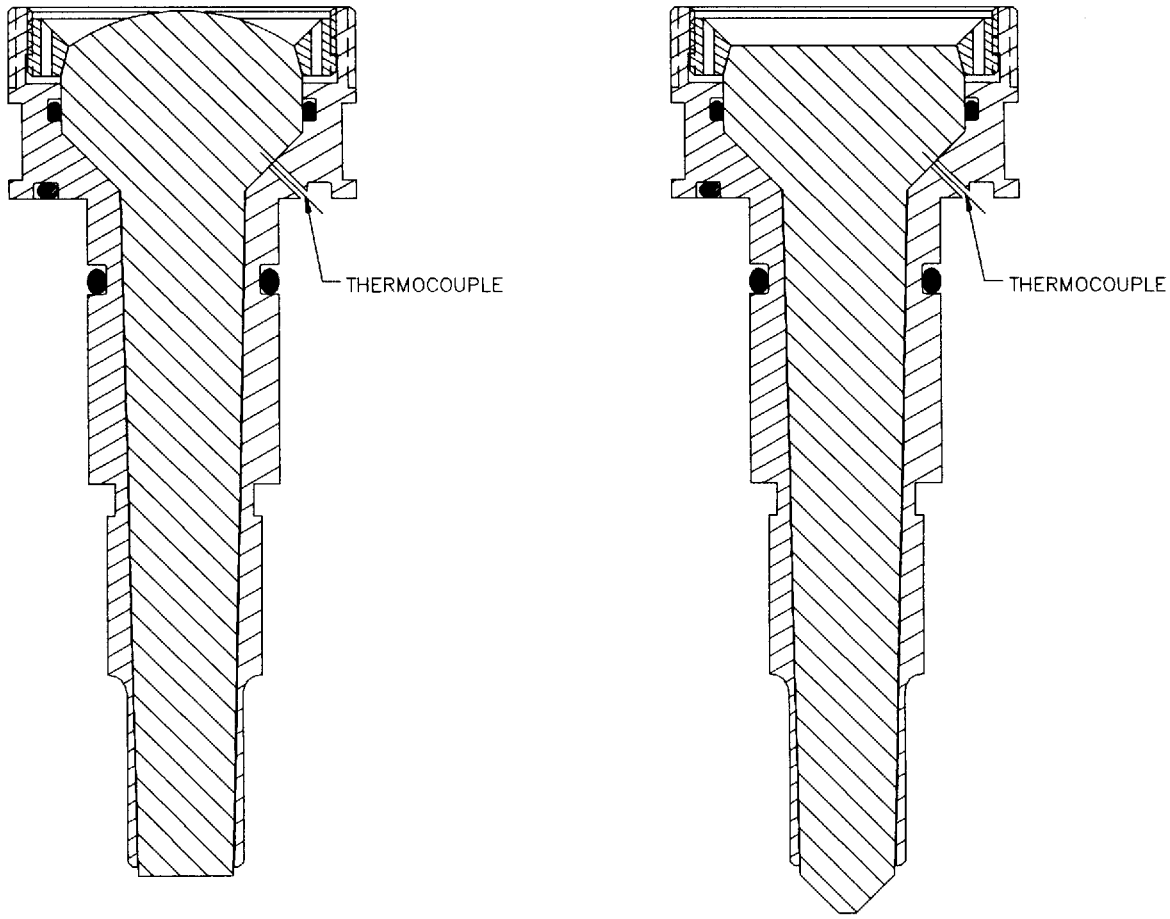

FIGURE 1
QUALIFICATION/ACCEPTANCE TEST THERMOCOUPLE LOCATION
FOR LIGHT PIPE ASSEMBLIES 55910-0128932-1 & 55910-0128932-2

55910-0128934
SHEET 10 REV -

QASHT 10

APPENDIX D

LIGHT PIPE ASSEMBLY QUALITY CONTROL TEST

SH. 1

DWG. NO. 0128935

APPLICATION		REVISIONS			
NEXT ASSY	USED ON	LTR	DESCRIPTION	DATE	APPROVED
0128932	LIGHT PIPE ASSY	–	INITIAL DRAWING	2/1/95	
		1	INTEGRATE COMMENTS	2/9/95	
		2	UPDATE CLEANING AND ASSEMBLY NOTES	4/25/95	
		3	CLARIFY AXIAL DISPLACEMENT MEASUREMENTS, PARAGRAPH 4.4	7/25/95	

REV STATUS OF SHEETS								
REV	3	2	2	2	1	1	–	
SHEET	1	2	3	4	5	6	7	

INTERPRET DRAWING IN ACCORDANCE WITH DOD–STD–100

NAVAL COMMAND, CONTROL, AND OCEAN SURVEILLANCE CENTER
RESEARCH, DEVELOPMENT, TEST AND EVALUATION DIVISION
SAN DIEGO, CA 92152–5000

UNLESS OTHERWISE SPECIFIED DIMENSIONS ARE IN INCHES.
GENERAL TOLERANCES:
XX DECIMALS ± | XXX DECIMALS ± | ANGLES ±

APVD	
CHKD	R. JOHNSON
PREP	T. PICKERING

LIGHT PIPE ASSEMBLY, QUALITY CONTROL TESTS

PROJ NO

COG CODE 564

APPROVED FOR

BY DIRECTION

RLSE DATE

SIZE	CAGE CODE	DWG. NO.
A	55910	0128935

SCALE: NONE | 01289351 | SHEET 1 OF 7

1.0 SCOPE

This specification provides quality control pressure testing requirements for the acrylic Light Pipe, CRES Retainer and CRES Adapter used in Light Pipe Assemblies, 55910-0128932-1 and 55910-0128932-2. These Light Pipe Assemblies are used to transmit light from an externally mounted light source through the pressure boundary of a man-rated hyperbaric chamber for interior illumination. Light Pipe Assemblies 55910-0128932-1 and 55910-0128932-2 are intended for a maximum working pressure of 1000 psi with a light source that does not allow the temperature of the acrylic Light Pipe head to exceed 150 degrees Fahrenheit (°F). Each Light Pipe Assembly includes an acrylic Light Pipe, 55910-0128930-1 or 55910-0128930-2, a CRES Adapter, 55910-0128931, and a CRES Retainer, 55910-0128929. Prior to being placed in service, each of these Light Pipe Assembly components shall be pressure tested per the requirements of this specification.

2.0 APPLICABLE DOCUMENTS

The following documents form a part of this specification to the extent specified herein.

NUMBER	TITLE
55910-0128929	Retainer, Light Pipe
55910-0128930	Light Pipe
55910-0128931	Adapter, Light Pipe
55910-0128932	Light Pipe Assembly
ASME PVHO-1	Safety Standard for Pressure Vessels for Human Occupancy

3.0 DEFINITIONS

CRES - Corrosion Resistant Steel

4.0 REQUIREMENTS

4.1 The supplier shall perform the following quality control pressure test on all components that comprise Light Pipe Assemblies 55910-0128932-1 and 55910-0128932-2.

4.2 All components of the Light Pipe Assembly shall be cleaned and assembled in accordance with (IAW) notes 2 and 3 of 55910-0128932.

4.3 All components of the Light Pipe Assembly, 55910-0128932-1 or 55910-0128932-2, shall be pressure tested once prior to being accepted for service. This pressure test shall be performed IAW Article 7, paragraph 2-7.8, of ASME PVHO-1 except as otherwise noted here. The Light Pipe Assembly shall be installed in a temperature controlled pressure vessel using a flat washer and a 1.000-14UNS-2B hex nut (items 17 and 18 of 55910-0128932). The hex nut shall be torqued to 45 ft-lb. ± 5 ft-lb. A dial indicator capable of measuring accurately in .0001 inch (") increments shall be zeroed against the Light Pipe acrylic stem tip as shown in figure 1. The Light Pipe Assembly shall then be pressurized using water to 1500 pounds per square inch (psi) + 0 psi - 50 psi for a minimum duration of 1 hour with the temperature of all components stabilized at 125 °F + 0 °F - 10 °F. The pressurization rate to 1500 psi shall not exceed 650 psi/minute. After one hour, but not more than four hours, of sustained pressurization to 1500 psi, the axial displacement at the tip of the acrylic Light Pipe stem shall be recorded by use of the dial indicator. At the conclusion of this test, the Light Pipe Assembly shall be depressurized to atmospheric pressure at a rate not exceeding 650 psi/minute.

4.4 Acceptance of the components of the Light Pipe Assembly, 55910-0128932-1 or 55910-0128932-2, shall be IAW Article 7, paragraph 2-7.7, of ASME PVHO-1 except as otherwise noted here. Any leakage through the Light Pipe Assembly during the course of the quality control pressure test shall be cause for rejection. Axial displacements of the acrylic Light Pipe stem tip exceeding .007" during the course of the sustained hold at 1500 psi shall be cause for rejection. Measurement of the axial displacement during the course of the sustained hold at 1500 psi shall be the difference in axial displacement recorded at the conclusion of the 1500 psi hold (just prior to depressurization) as compared with the axial displacement recorded upon reaching 1500 psi. Residual axial displacements of the acrylic Light Pipe stem tip exceeding .003" after the

conclusion of the quality control pressure test shall be cause for rejection. Measurement of the residual axial displacement of the acrylic Light Pipe stem tip shall be the difference in axial displacement recorded at the conclusion of the test (at atmospheric pressure after depressurization from 1500 psi) as compared with the axial displacement recorded at the beginning of the test (at 50 psi + 50 psi - 10 psi before initiation of pressurization to 1500 psi) with the temperature of the light pipe held constant at 125 °F +0 °F - 10 °F. After the conclusion of the quality control test, the Light Pipe Assembly shall be completely disassembled. All surfaces of the acrylic Light Pipe, 55910-0128930-1 or 55910-0128930-2, shall be visually inspected. Crazing or cracks on the surface of the Light Pipe visible to the unaided eye, except for correction required to achieve 20/20 vision, shall be cause for rejection. In addition, a post pressure test dimensional inspection will be performed on the acrylic Light Pipe. Any variance in excess of 0.1% from pre pressure test dimensions compensated for difference in ambient temperatures at which measurements were performed shall be cause for rejection. The Light Pipe Adapter, 55910-0128931, shall be visually inspected at the conclusion of the quality control pressure test. Any cracks or permanent deformation on the surface areas indicated by figure 2 visible to the unaided eye, except for correction required to achieve 20/20 vision shall be cause for rejection.

4.5 Documentation of the Light Pipe Assembly Quality Control Test shall be based on the pressure test report included in Appendix A, Enclosure 4, of ASME PVHO-1 and shall include the following information:

a. Light Pipe Assembly part/serial number.
b. Light Pipe part/serial number.
c. Retainer part/serial number.
d. Adapter part/serial number.
e. Maximum allowable working pressure of assembly.
f. Maximum design temperature of assembly.
g. Gage, primary & secondary; manufacturer name, model number, serial number, range, calibration date, calibration due date, and accuracy.
h. Type of medium used (water).
i. Rate of pressurization (average).

j. Start pressure, start time, start temperature, finish pressure, finish time, and finish temperature.
k. Light Pipe stem maximum axial displacement at test pressure and residual axial displacement after conclusion of test.
l. Light Pipe and Light Pipe Adapter post pressure test observations on; leakage, permanent deformation, surface crazing or cracking.
m. Pressure test supervisor, signature, and date.
n. Date of test.
o. Name and address of pressure testing laboratory.

4.6 Quality Control Test records shall be kept on file by the supplier for at least the design life of the Light Pipe Assembly components plus 2 years IAW Article 7, paragraph 2-7.10, of ASME PVHO-1. The supplier shall provide a copy of Quality Control Test Records to the government with the delivery of each Light Pipe Assembly component.

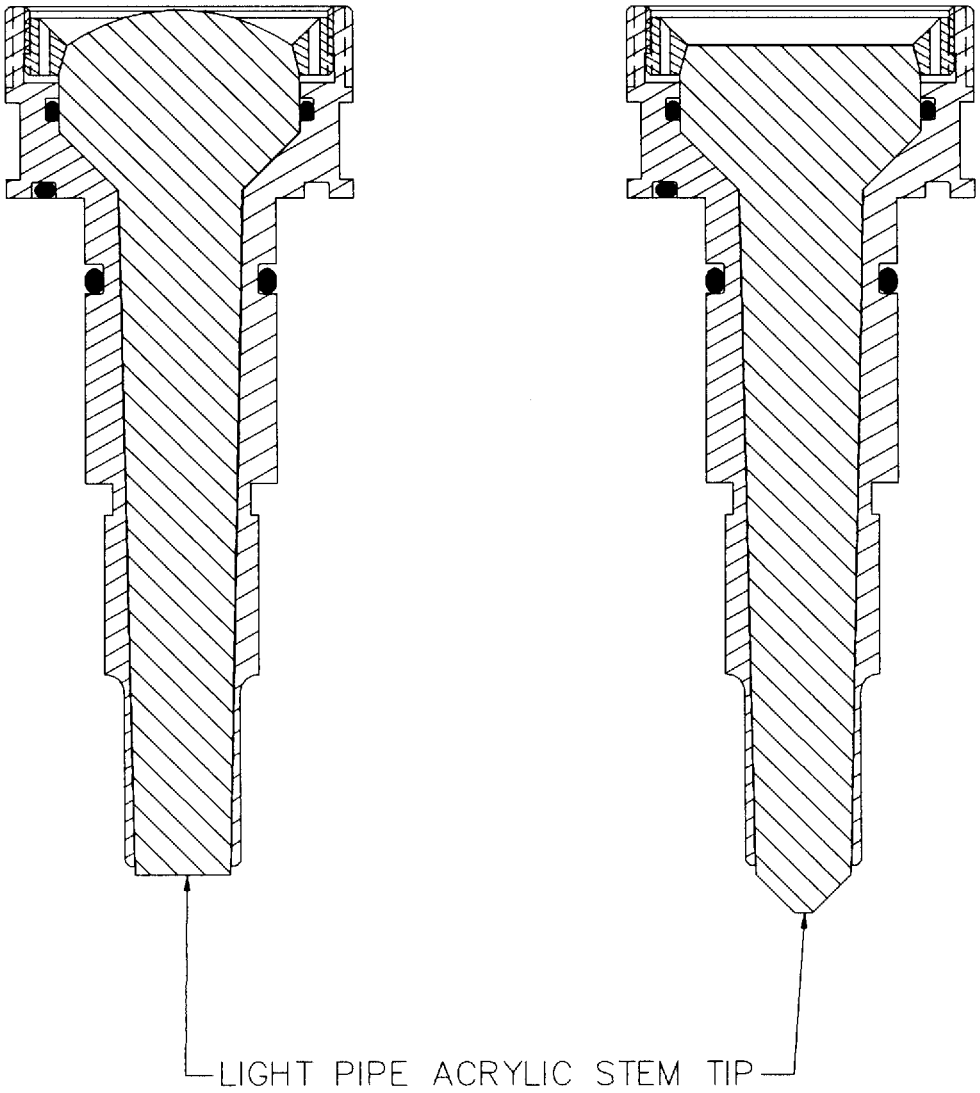

FIGURE 1

LIGHT PIPE ASSEMBLIES 55910-0128932-1 & 55910-0128932-2

55910-0128935
SHEET 6 REV 1

01289356.DWG

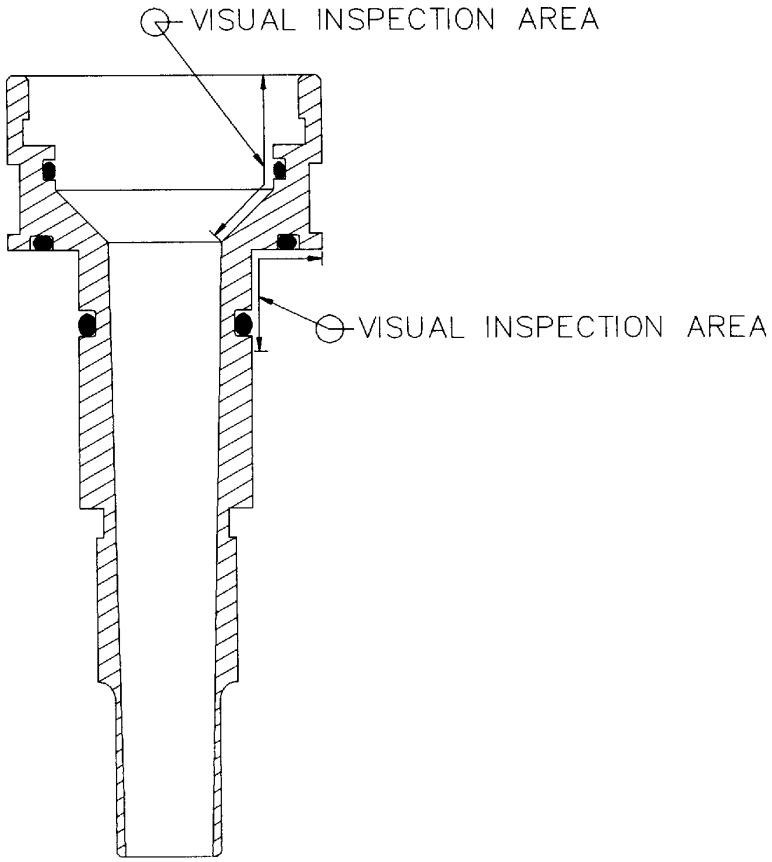

FIGURE 2
POST QUALITY CONTROL PRESSURE TEST VISUAL INSPECTION AREAS
FOR LIGHT PIPE ADAPTER 55910–0128931

55910–0128935
SHEET 7 REV –

01289357.DWG

REPORT DOCUMENTATION PAGE

Form Approved
OMB No. 0704-0188

Public reporting burden for this collection of information is estimated to average 1 hour per response, including the time for reviewing instructions, searching existing data sources, gathering and maintaining the data needed, and completing and reviewing the collection of information. Send comments regarding this burden estimate or any other aspect of this collection of information, including suggestions for reducing this burden, to Washington Headquarters Services, Directorate for Information Operations and Reports, 1215 Jefferson Davis Highway, Suite 1204, Arlington, VA 22202-4302, and to the Office of Management and Budget, Paperwork Reduction Project (0704-0188), Washington, DC 20503.

1. AGENCY USE ONLY *(Leave blank)*	2. REPORT DATE	3. REPORT TYPE AND DATES COVERED
	March 1996	Final

4. TITLE AND SUBTITLE	5. FUNDING NUMBERS
ACRYLIC LIGHT PIPES FOR INTERIOR ILLUMINATION OF HYPERBARIC CHAMBERS	AN: DN306579 PE: 0603013N PROJ: EM27
6. AUTHOR(S) R. P. Johnson	
7. PERFORMING ORGANIZATION NAME(S) AND ADDRESS(ES) Naval Command, Control and Ocean Surveillance Center (NCCOSC) RDT&E Division San Diego, California 92152–5000	8. PERFORMING ORGANIZATION REPORT NUMBER TR 1622
9. SPONSORING/MONITORING AGENCY NAME(S) AND ADDRESS(ES) Navy Engineering Logistics Office P. O. Box 2304, Eads Street Arlington, VA 22201	10. SPONSORING/MONITORING AGENCY REPORT NUMBER

11. SUPPLEMENTARY NOTES

12a. DISTRIBUTION/AVAILABILITY STATEMENT	12b. DISTRIBUTION CODE
Approved for public release; distribution is unlimited	

13. ABSTRACT *(Maximum 200 words)*

The Naval Command, Control and Ocean Surveillance Center RDT&E Division (NRaD) has developed a new acrylic plastic light pipe for hyperbaric chamber illumination that can be installed in pipe-sized penetrations in the wall of a hyperbaric chamber that provides improved optical, mechanical, and structural performance over commercial hardware. This new light pipe design has been qualified and accepted for service by the U.S. Navy community in man-rated hyperbaric chambers for service to 1000 psi and 150°F. NRaD light pipe equipment placed into operational service has been manufactured, inspected, assembled, and tested to meet U.S. Navy standards as well as industrial recognized safety standards that govern the design of human-occupied pressure vessel hardware.

14. SUBJECT TERMS	15. NUMBER OF PAGES
Mission Area: Ocean Engineering hyperbaric chambers acrylic plastic light pipes hyperbaric chamber illumination	16. PRICE CODE

17. SECURITY CLASSIFICATION OF REPORT	18. SECURITY CLASSIFICATION OF THIS PAGE	19. SECURITY CLASSIFICATION OF ABSTRACT	20. LIMITATION OF ABSTRACT
UNCLASSIFIED	UNCLASSIFIED	UNCLASSIFIED	SAME AS REPORT