Technical Document 2936
January 1995

Command, Control, Communications, Computers, and Intelligence "System of Systems"

Overview of Army, Air Force, Marine, Navy, Special Operations Forces, and Selected Unified Commands

Naval Command, Contro and Ocean Surveillance Center (NCCOSC)
RDT&E Division (NRaD)

Command and Control Department

Approved for public release; distribution is unlimited.

CONTENTS

Unified Command "System of Systems" C4I Architectures
- ACOM
- EUCOM
- PACOM

Services' "System of Systems" C4I Architecture
- Army
- Air Force
- Marines
- Navy
- Special Operations Forces

Summary and Comparisons

Acronyms

Naval Command, Control and Ocean
Surveillance Center
Research Development Test &
Evaluation Division

Command and
Control Department

THIS DOCUMENT: "WHY" AND "HOW"

Collect information on C4I systems and new thrusts in:
- Services
- Selected Unified Commands to keep NRaD aware of current developments

Data

Summarize C4I Architectures:
- what systems exist
- which systems communicate among each other
- what comms services are used

given the limitations:
- some information very time dependent
- limited scope to systems of interest to NRaD

Analyze Information

Produce a document (this one) containing summaries:
- for people new to C4I
- for executives and others who need a ready reference of systems, architectures, and acronyms

Share Knowledge

"Heads Up"

POCs

Pursue Joint and Multiservice business of interest

SELECTED UNIFIED COMMANDS

- ACOM
  - Command Relationships
  - C4I: Connectivity Overview
- EUCOM
  - Command Relationships
  - Major C2I System Relationships
  - C4I: Connectivity Overview
- PACOM
  - Command Relationships
  - C4I: Connectivity Overview
- STATUS OF MAJOR C4I EFFORTS

USACOM RELATIONSHIPS

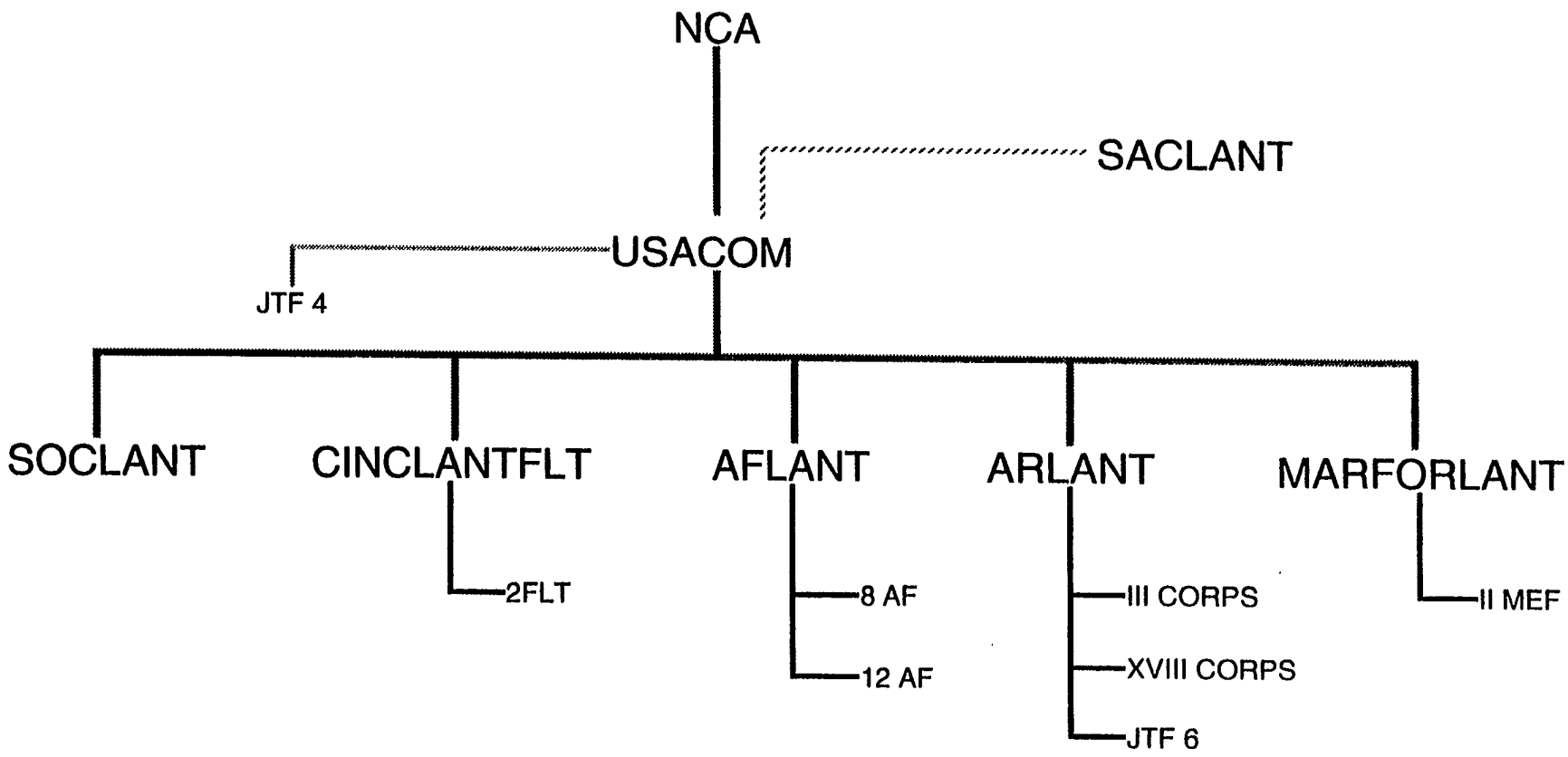

This diagram displays the major relationships that USACOM has with superiors and subordinates. It should be noted that USACOM command is dominated by CINCLANTFLT (as compared with EUCOM, where the Army and Air Force play much more significant roles in supporting the C4I of the unified command.)

AFLANT	US Air Force, Atlantic. Synonymous with parts of the Air Combat Command (ACC) at Langley AFB.
ARLANT	US Army Atlantic. Synonymous with FORSCOM. Located in Georgia.
CINCLANTFLT	Commander in Chief, Atlantic Fleet
MARFORLANT	Marine Forces, Atlantic. Headquarters has moved to Camp LeJeune, with liason in Norfolk.
NCA	National Command Authority
SACLANT	Supreme Allied Command, Atlantic
SOCLANT	Special Operations Command, Atlantic
USACOM	US Atlantic Command

USACOM CONNECTIVITY (SECRET NETWORKS)

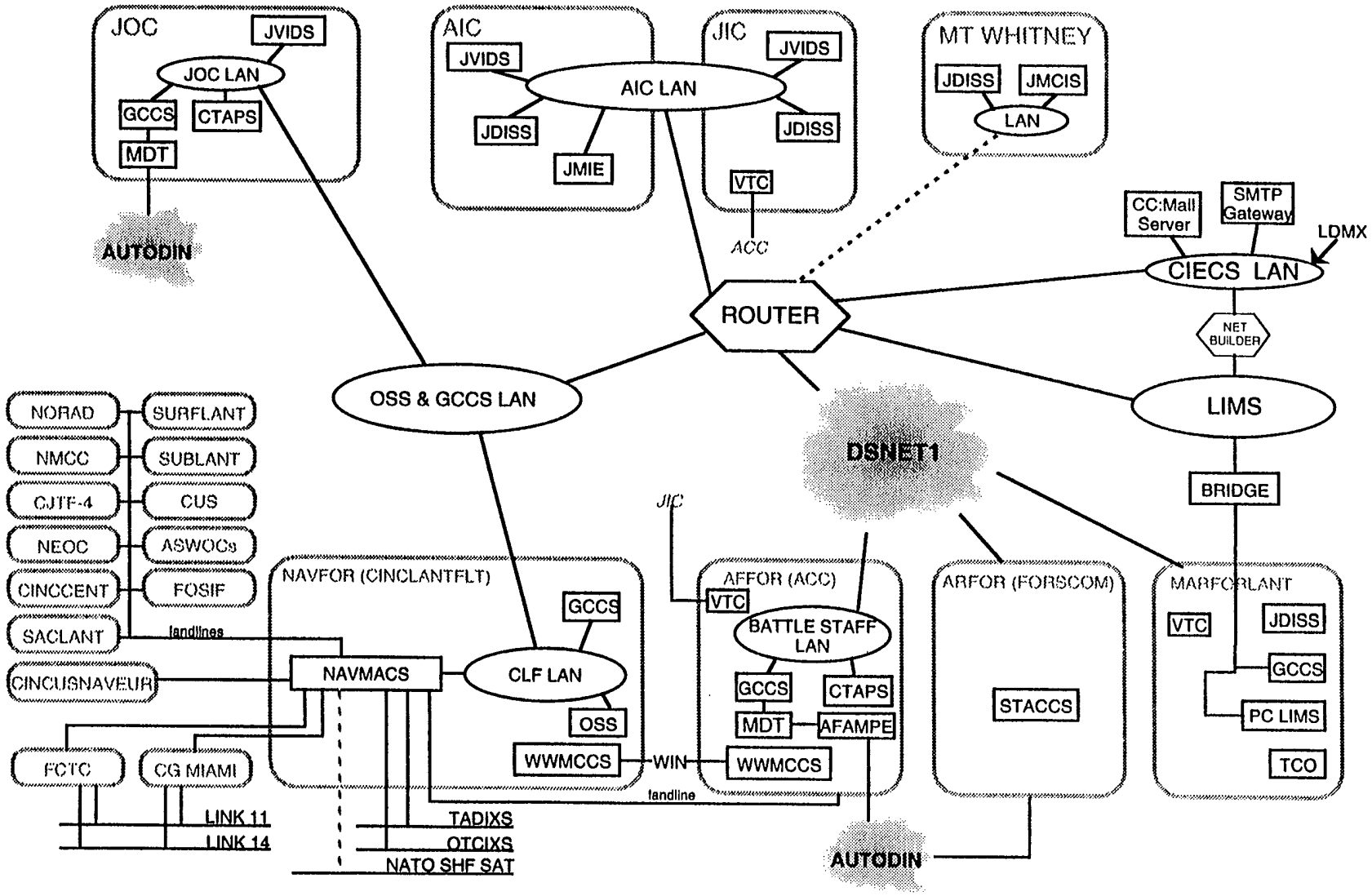

This is a depiction of the connectivity of major C4I systems at ACOM and its components, as of mid-1994. Included are the systems and networks that operate up to the SECRET level. (Please see following diagram for TS or SCI connectivity.)

ACOM is a test site for GCCS, and as such, someof the new GCCS connectivity changes are provisional, and some are not reflected above.

MARFORLANT just moved to Camp LeJeune; as such, some of the connectivity is provisional.

Dotted lines indicate digital broadcasts.

AFAMPE
AIC Atlantic Intelligence Center
AIC LAN AIC network at the secret level; one of many AIC networks.
AMHS Automated Message Handling System
ASWOCs Anti-submarine Warfare Operations Center
AUTODIN Automatic Digital Network
BATTLESTAFF LAN General purpose network supporting AFFOR staff with e-mail, etc.
BRIDGE Some networks are extended physically with simple bridges, such as to MARFORLANT (Norfolk).
CG MIAMI Coast Guard, Miami, Florida
CC:Mail Electronic mail server software
CIECS LAN CINCLANTFLT Internetwork Electronic Communication System
CINCCENT Commander in Chief, Central Command
CINCUSNAVEUR Commander in Chief, US Navy Europe
CJTF-4 Commander, Joint Task Force 4
CTAPS Contingency Theater Automated Planning System; ubiquitous throughout combat Air Force command structure and JTFs.
CUS Commander, Undersea Surveillance
DSNET Defense Secure Network. DSNET 1 is the secret segment, while DSNET 3 is the SCI segment.
FCTC Fleet Combat Training Center
FOSIF Fleet Ocean Surveillance Information Facility
GCCS Global Command and Control System; ACOM is a major testsite for GCCS. Will eventually replace WWMCCS.
JDISS Joint Deployable Intelligence Support System
JIC Joint Intelligence Center
JMIE
JOC Joint Operations Center
JOC LAN The major network in the JOC connecting OSS, JOTS, GCCS, and other systems.
JVIDS Joint Visually Integrated Display System
LDMX Local Digital Message eXchange
LIMS LANTCOM Internetted Message System
LINK 11 Tactical data link, mostly for targets and training.
LINK 14 Tactical data link, primarily for air traffic.
MCS Maneuver Control System
MDT Message Distribution Terminal
MT WHITNEY Second Fleet command ship
NAVMACS Navy Modular Automated Communications System
NET BUILDER A router between networks
NMCC National Military Command Center
Norfolk Location of CINCLANTFLT and 2nd Fleet
OSS Operations Support System; absorbed by JMCIS
OTCIXS Officer in Tactical Command Information Exchange Subsystem
PC LIMS Personal Computer on LIMS
Routers There are several routers connecting the networking components at ACOM.
SACLANT Supreme Allied Command, Atlantic
SMTP Gateway Simple Mail Transfer Protocol Gateway; computer that allows for receipt of e-mail from outside systems.
STACCS Standard Theater Army Command and Control System
SUBLANT Submarine Forces, Atlantic
SURFLANT Surface Fleet, Atlantic
TADIXS Tactical Data Information Exchange Subsystem
TCO Tactical Combat Operations System, USMC primary near real time tactical picture support system.
VTC Video Teleconferencing; there exists a video conferencing capability between ACC and CINUSACOM; the capability is being expanded to the other components.
WIN WWMCCS Interconnection Network
WWMCCS World Wide Military Command and Control System

USACOM ADDITIONAL (AIC/TS) CONNECTIVITY

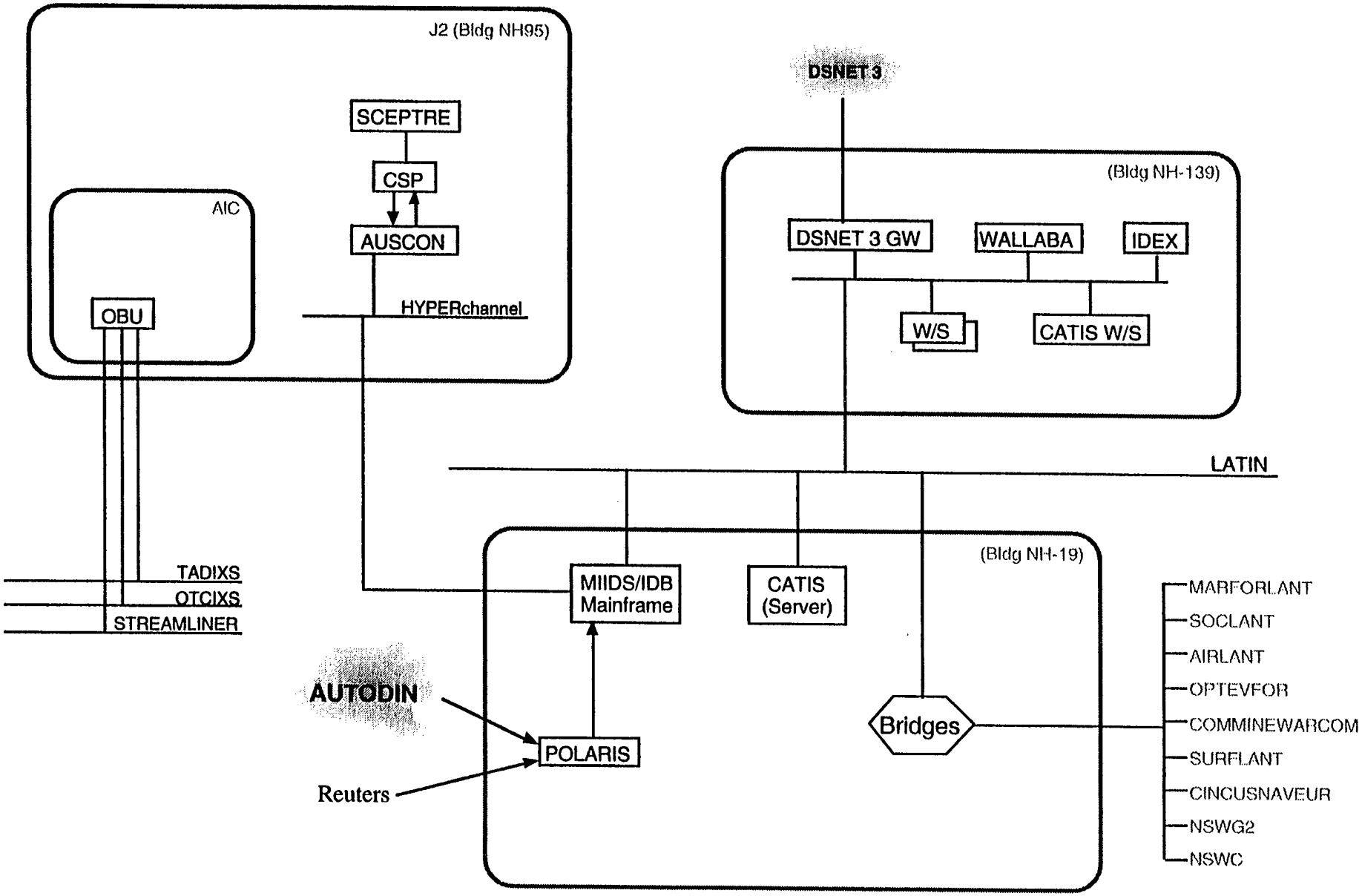

This is a depiction of additional connectivity at ACOM, especially at the Atlantic Intelligence Center, at the TS level. This drawing obviously cannot be complete, but does give some indications of the scope of the connections and some key systems that are used.

AUSCON	
AUTODIN	Automatic Digital Network
BRIDGES	Connections to remote sites with LATIN are through bridges
CATIS	Computer Aided Tactical Information System
COMMINEWARCOM	Commander, Mine Warfare Command
CSP	
DSNET	Defense Secure Network. DSNET 1 is the secret segment, while DSNET 3 is the SCI segment.
DSNET3 GW	Allows for networking into DSNET 3
HYPERchannel	
IDEX	Imagery Digital Exploitation
J2	ACOM Intelligence Directorate
LATIN	LANTCOM Theater Intelligence Network
MIIDS/IDB Mainframe	Military Intelligence Integrated Data System/Intgerated Database mainframe computer
NSWC	Naval Special Warfare Command
NSWG2	Naval Special Warfare Group, 2
OBU	OSIS Baseline Upgrade
OPTEVFOR	Operations Test and Evaluation Force; Navy command that tests and evaluates readiness.
OTCIXS	Officer in Tactical Command Information Exchange
PC	Personal Computer
POLARIS	
Reuters	International news service
SCEPTRE	
TADIXS	Tactical Data Information Exchange Subsystem
W/S	WorkStation
WALLABA	

USEUCOM RELATIONSHIPS

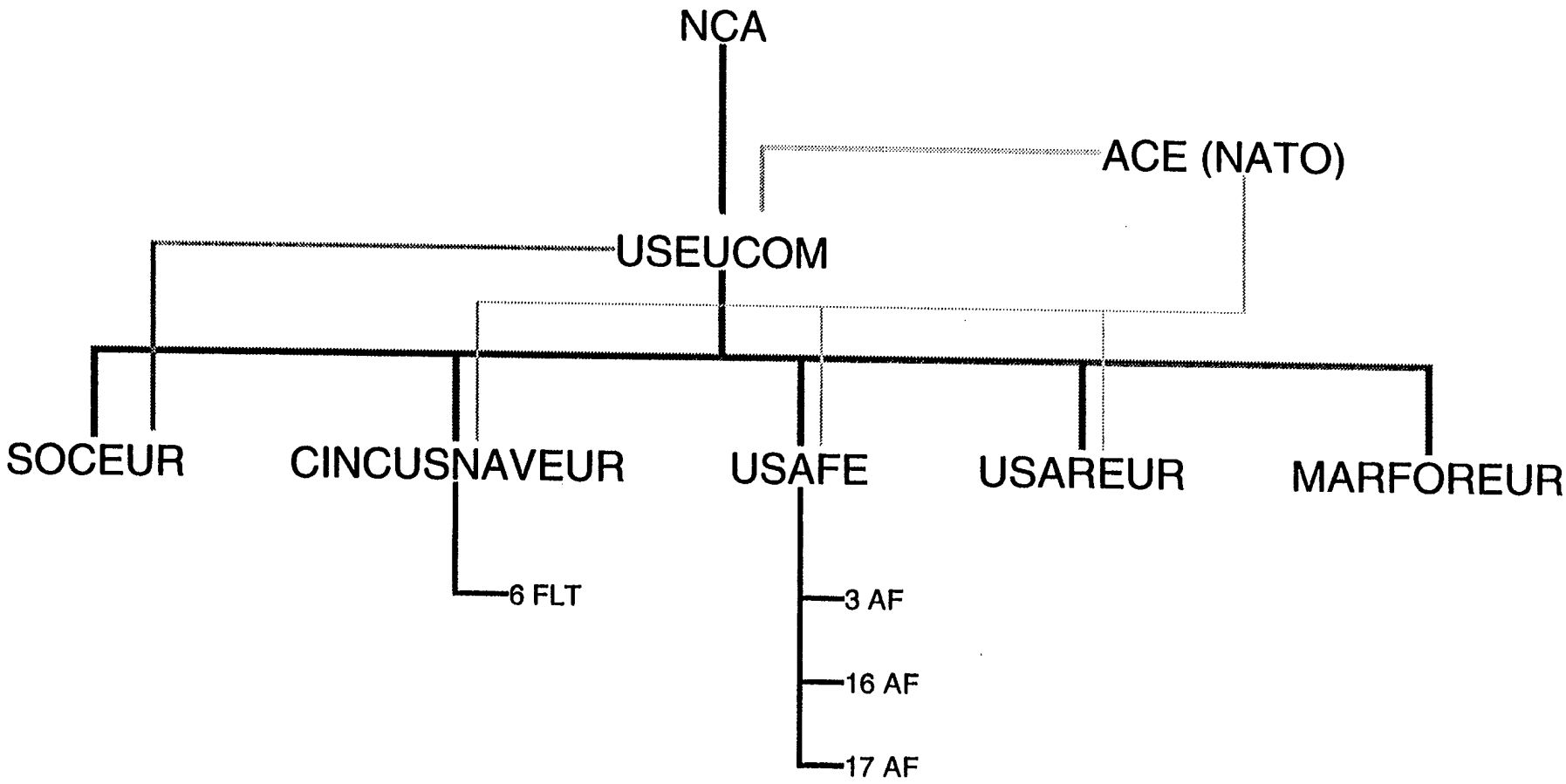

This diagram displays the major relationships that USEUCOM has with superiors and subordinates. It should be noted that USEUCOM command structures, and the JTFs created under USEUCOM, have complex command relationships.

ACE	Allied Command Europe. The existence of NATO has, of course, direct implications on the Command and Control requirements of USEUCOM.
CINCUSNAVEUR	Commander in Chief, US Navy Europe. The 6th Fleet is stationed in the Mediterranean.
MARFOREUR	Marine Forces Europe. A new name for FMFEUR; very limited resources in Europe.
NCA	National Command Authority
SOCEUR	Special Operations Command Europe. SOCEUR is unique in that it is a component and a staff element. SOCEUR is larger than SOCPAC or SOCLANT.
USAFE	US Air Forces Europe. Three numbered Air Forces are stationed in Europe.
USAREUR	US Army Europe. The Army has extensive forces in Europe, and thus significant C2, which directly impacts the C2 of USECOM.
USEUCOM	US European Command

USEUCOM MAJOR C2I SYSTEMS RELATIONSHIPS (NEAR TERM)

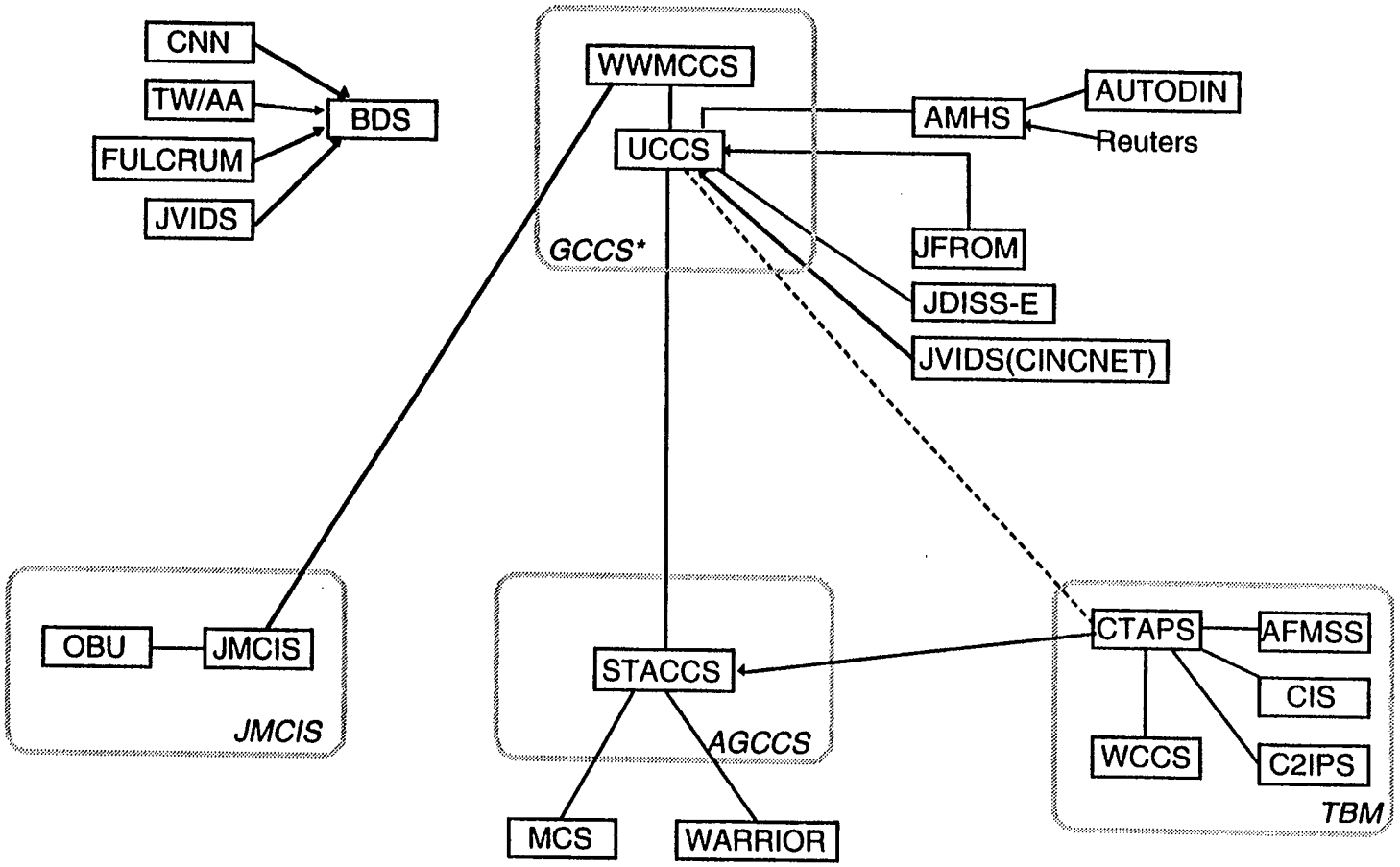

This diagram shows the major C4I systems in use at USEUCOM, and the relationships that exist among them either today or in the near future. Dashed lines indicate future items.

EUCOM is significantly an Army and Air Force based unified command, and as such the Army and Air Force C2 systems play significant role.

AFMSS	Air Force Mission Support System; used at squadron level
AGCCS	Army Global Command and Control System
AMHS	Automated Message Handling System
AUTODIN	Automatic Digital Network
BDS	Briefing Display System
C2IPS	Command and Control Information Processing System
CIS	Combat Intelligence System; used at AOC down to squadron
CNN	Cable News Network
CTAPS	Contingency Theater Automated Planning System; ubiquitous throughout combat Air Force command structure and JTFs.
FULCRUM	Not an acronym - a mapping system.
GCCS	Global Command and Control System
JDISS-E	Joint Deployable Intelligence Support System - Europe.
JFROM	Joint Force Reception and Onward Movement
JMCIS	Joint Maritime Command Information System
JVIDS	Joint Visually Integrated Display System
MCS	Maneuver Control System
OBU	OSIS Baseline Upgrade
REUTERS	International news service
STACCS	Standard Theater Army Command and Control System
TBM	Theater Battle Management; Air Force's unifying C4I concept.
TW/AA	video displays
UCCS	European Command and Control System. This is the major planning and analysis support system for the EUCOM staffs.
WARRIOR	An Army intelligence system (not an acronym)
WCCS	Wing Command and Control System
WWMCCS	World Wide Military Command and Control System

Naval Command, Control and Ocean
Surveillance Center
Research Development Test &
Evaluation Division

Command and
Control Department

USEUCOM C4I CONNECTIVITY

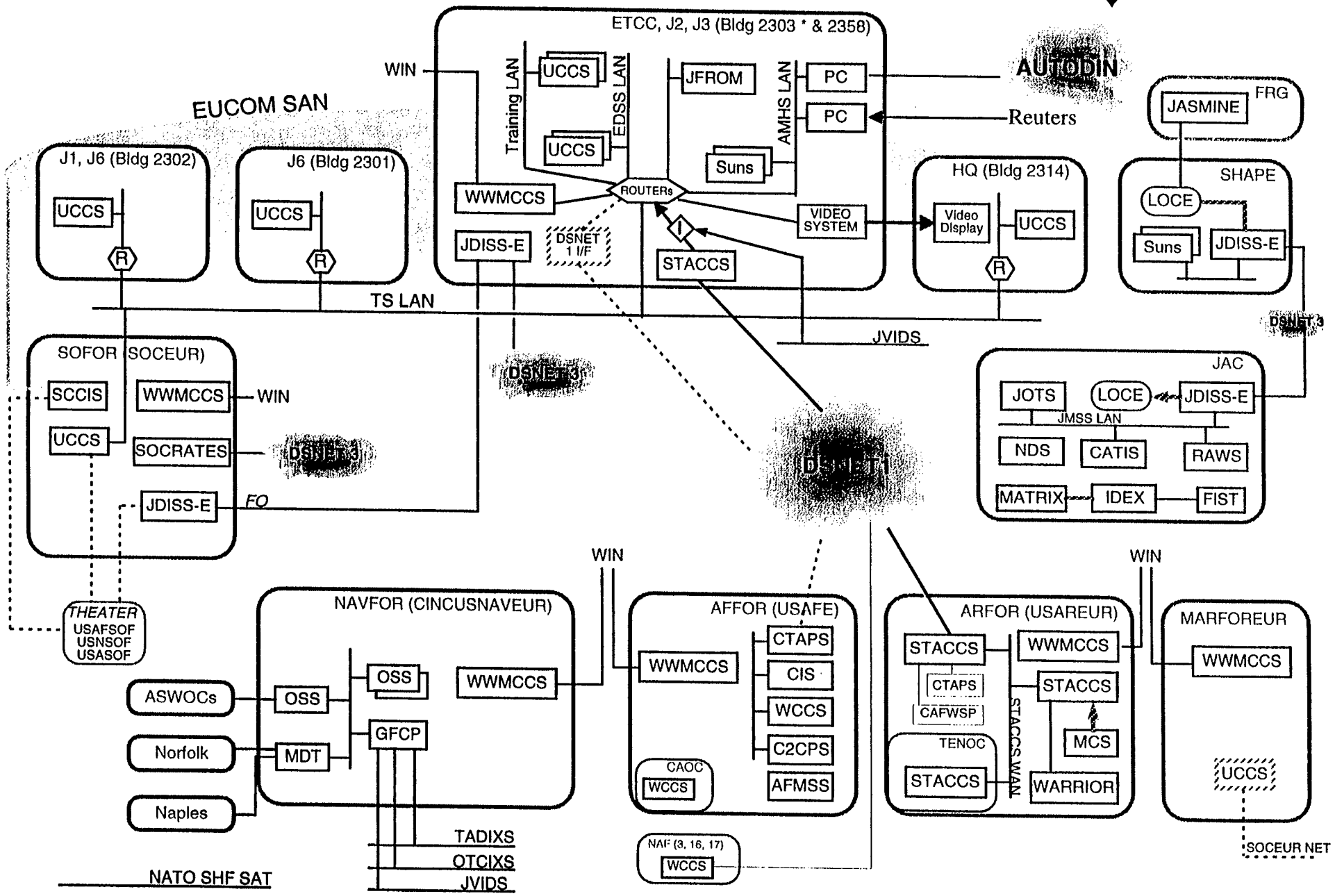

Naval Command, Control and Ocean
Surveillance Center
Research Development Test &
Evaluation Division

Command and
Control Department

This is a depiction of the connectivity of major C4I systems at EUCOM and it's components, as of middle of 1994. Please note that EUCOM is in the process of moving it's command center, and the building 2303 and 2358 depiction is an extrapolation of current or previous architectures. Also, the changes due to GCCS are not reflected above.

Dashed lines indicate new connectivity in the near term. Dark lines striped white indicate interfaces via disk exchange.

AFMSS Air Force Mission Support System; used at squadron level.
AMHS Automated Message Handling System
ASWOCs Anti-submarine Warfare Operations Center
AUTODIN Automatic Digital Network
C2IPS Command and Control Information Processing System; used from AOC down to wing level.
CAFWSP Combat Air Forces Weather Software Package; a CTAPS integated application to provide both current and forecast weather in support of target nomination, ATO planning, and execution.
CAOC Combined Air Operations Center
CATIS Computer Aided Tactical Information System
CIS Combat Intelligence System; used at AOC down to squadron
CTAPS Contingency Theater Automated Planning System; ubiquitous througout combat air force command structure and JTFs.
DSNET Defense Secure Network. DSNET 1 is the secret segement, while DSNET 3 is the SCI segment.
EDSS EUCOM Decision Support System; a collection of C2 systems based around UCCS that is used by EUCOM commanders.
ETCC European Theater Command Center; the command center complex for USEUCOM. Currently being remodeled and will soon be operational.
EUCOM SAN European Command Secret Area Network
FIST Fleet Imagery Support Terminal
FO Fiber Optic
FRG Federal Republic of Germany
HQ Headquarters
I Interface; signifies one-way interfacing
IDEX Imagery Digital Exploitation
J1, J2, J3, J6 Staff components of the command
JASMIN Joint Analysis System for Military Intelligence
JDISS-E Joint Deployable Intelligence Support System - Europe. EUCOM unique version of JDISS. JDISS-E also known as EISS.
JFROM Joint Force Reception and Onward Movement
JOTS Joint Operational Tactical System; absorbed by JMCIS
JVIDS Joint Visually Integrated Display System
LOCE Linked Operations/Intelligence Centers Europe
MATRIX Multi-source Automated Target Recognition with Interactive Exploitation
MCS Maneuver Control System
MDT Message Distribution Terminal
NAF Numbered Air Forces
Naples Location of 6th Fleet
NDS National Photographic Interpretation Center Data System
Norfolk Location of CINCLANTFLT and 2nd Fleet
OSS Operations Support System; absorbed by JMCIS
OTCIXS Officer in Tactical Command Information Exchange Subsystem
PC Personal Computer
RAWS Relocatable Army Processors for Intelligence Data - Europe Analyst Workstation
Reuters International news service
Routers There are several routers connecting the networking components at EUCOM. The diagram symbolically shows one.
SCCIS SOCEUR Command and Control Information System
SOCEUR LAN SOCEUR Local Area Network
SOCRATES Special Operations Command Research, Analysis and Threat Evaluation System
STACCS Standard Theater Army Command and Control System
Suns Workstatios from Sun Microsystems, Inc.
TADIXS Tactical Data Information Exchange Subsystem
TENOC Theater Network Operations Center
TS LAN Top Secret Network on which UCCS runs.
UCCS European Command and Control System
USAFSOF, USNSOF, USASOF Special Operation Forces of the services.
Video System Capability to transmit to the commander video displays of some C4I systems. Output on **Video Display** in HQ building.
WARRIOR An Army intelligence system (not an acronym)
WCCS Wing Command and Control System
WIN WWMCCS Interconnection Network
WWMCCS World Wide Military Command and Control System

PACOM RELATIONSHIPS

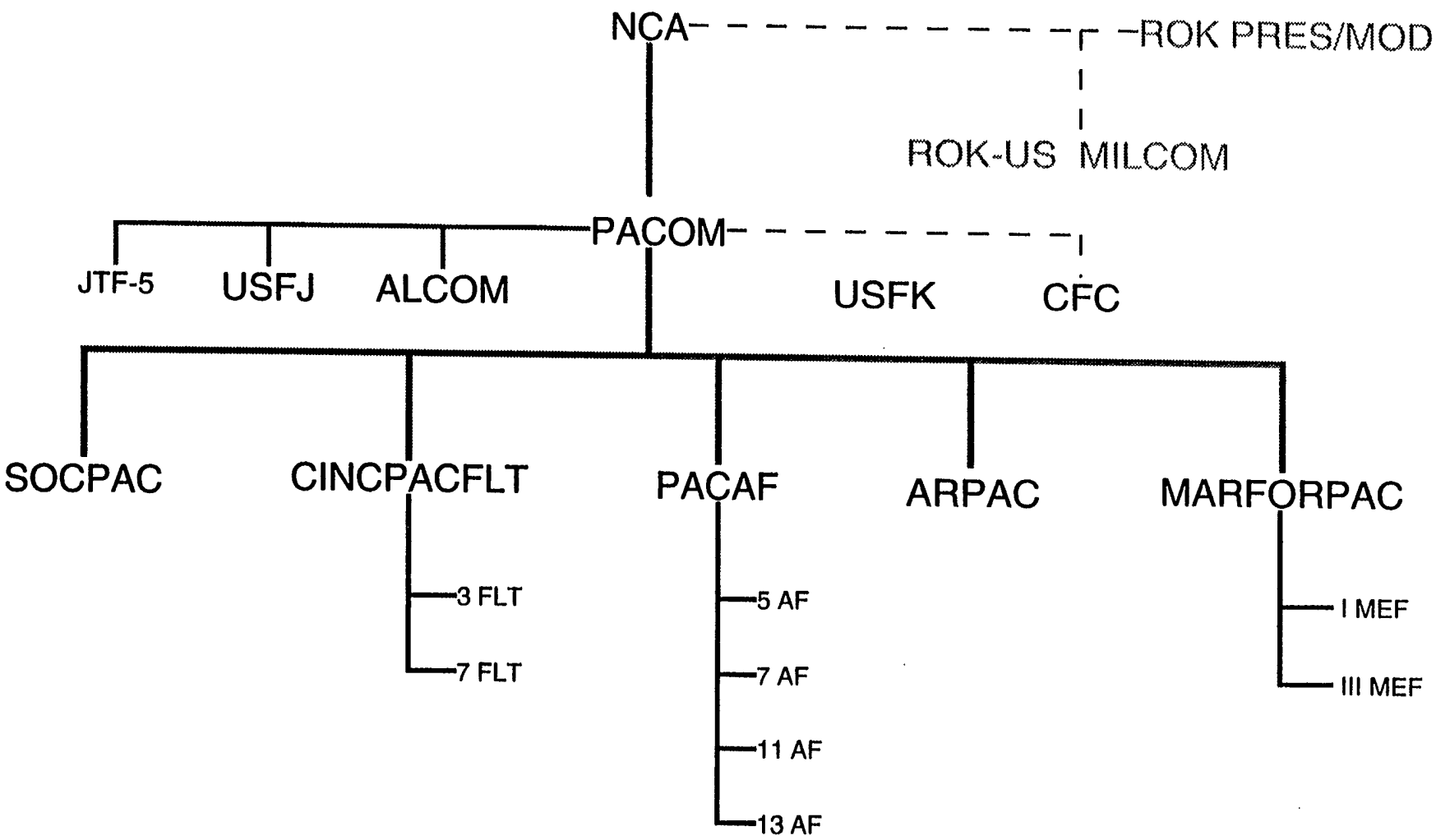

This diagram displays the major relationships that PACOM has with superiors and subordinates.

As can be seen from the diagram, the command of forces in Korea can be complex. This affects also the C4I systems, in particular, the control over the releasability of sensitive data, often dictating multiple networks, etc.

ALCOM Alaskan Command

ARPAC US Army, Pacific

CFC Combined Forces Command

CINCPACFLT Commander in Chief, Pacific Fleet

JTF-5 A standing joint task force (for interdiction, etc.)

MARFORPAC Marine Forces, Pacific

NCA National Command Authority

PACAF US Air Forces, Pacific

PACOM Pacific Command

ROK PRES/MOD Republic of Korea President or Minister of Defense; analagous to our NCA.

ROK-US MILCOM Republic of Korea - United States Military Committee.

SOCPAC Special Operations Command, Pacific

USFJ US Forces, Japan

USFK US Forces, Korea

PACOM NEAR TERM C4I CONNECTIVITY

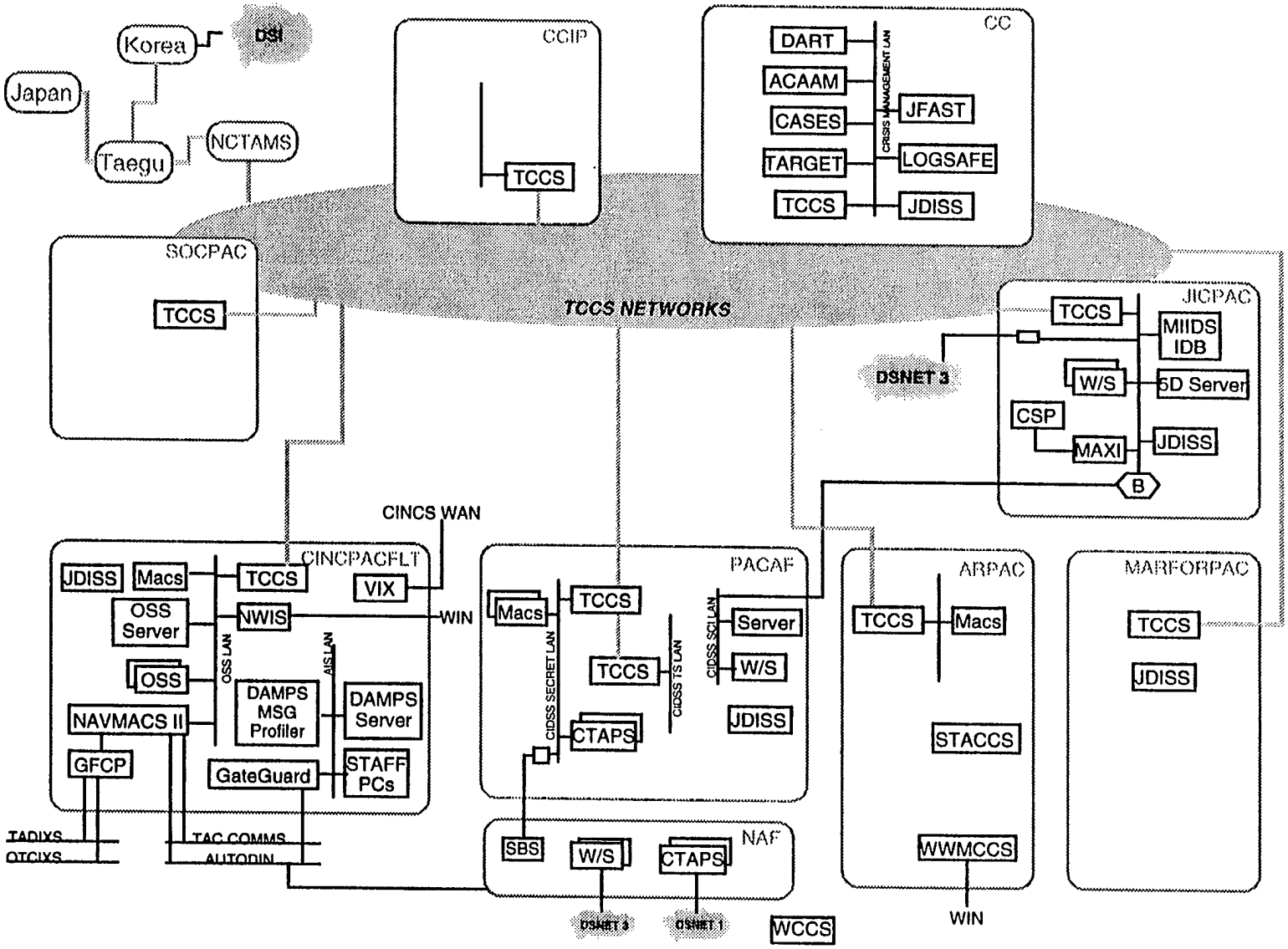

This diagram shows several of the key C4I systems in use at PACOM and its subordinates. Both ARPAC and SOCPAC have limited C4I (except WWMCCS for the Army) compared to EUCOM.

The grey lines indicate TCCS networking or network extensions. TCCS is the unifying C4I concept at PACOM.

5D Server Demand Driven Direct Digital Dissemination imagery server.
AIS LAN Administrative data system network at PACFLT
AMHS Automated Message Handling System
AUTODIN Automatic Digital Network
CASES Capabilities Assesment, Simulation, and Evaluation System
CIDSS COMPACAF Integrated Decision Support System. The umbrella engineering effort coordinating the support systems at PACAF
CINCS WAN Connects CINCPACFLT, CINCLANTFLT, and CNO with video and admin support.
CSP Communications Support Processor
CTAPS Contingency Theater Automated Planning System; ubiquitous throughout combat air force command structure and JTFs.
DAMPS Desktop Automated Message Processing System. PACFLT is modernizing its networking and message handling, and as of the date of this document the diagram shown above is one possible configuration.
DART Dynamic Analysis and Replanning Tool
DSNET Defense Secure Network. DSNET 1 is the secret segment, while DSNET 3 is the SCI segment.
FIST Fleet Imagery Support Terminal
GateGuard Message processor
GFCP General-purpose Front-end Communications Processor
Japan TCCS networking can be extended to Japan for USFJ
JDISS Joint Deployable Intelligence Support System
JFAST Joint Flow and Analysis System for Transportation
JOTS Joint Operational Tactical System; absorbed by JMCIS
JVIDS Joint Visually Integrated Display System
Korea Several networking efforts are underway to connect PACOM C4I with systems in Korea.
LOGSAFE Logistics Sustainability Analysis and Feasibility Estimator
Macs At PACFLT, and especially at PACAF, briefing systems are constructed using Macintoshes as the data processing support.
MAXI Modular Architecture for the eXchange of Intelligence
MDT Message Distribution Terminal
MIIDS IDB Military Intelligence Integrated Data System/ Integrated Database mainframe computer
NAF Numbered Air Forces
NAVMACS II Navy Modular Automated Communications System, II
NCTAMS Naval Computer and Telecommunications Area Master Station
NWIS Navy interface to WWMCCS, part of OSS, absorbed by JMCIS
OSS Operations Support System; absorbed by JMCIS
OTCIXS Officer in Tactical Command Information Exchange Subsystem
PC Personal Computer
STACCS Standard Theater Army Command and Control System
TAC COMMS Tactical Communications
TADIXS Tactical Data Information Exchange Subsystem
Taegu Main entry point of TCCS network into Korea
TARGET Theater-level Analysis, Replanning,and Globabl Execution Toolbox
TCCS Theater Command and Control System. The major C2 system supporting PACOM and staff, and in use at all the components. Network extended off of Hawaii.
VIX Video Information Exchange System
WCCS Wing Command and Control System
WIN WWMCCS Interconnection Network
WWMCCS World Wide Military Command and Control System

STATUS OF MAJOR C4I EFFORTS

- **ACOM**

  USANET: Engineering effort at integrating and managing vast array of communications networks and associated systems.

  GCCS: Major test site for the Global Command and Control System.

- **EUCOM**

  European Theater Command Center (ETCC) completed.

  GCCS - UCCS relationship being defined.

  Continuing need to support many diverse JTFs.

- **PACOM**

  TCCS: maturing concept and system of systems.

  GCCS - TCCS relationship being defined.

US ARMY

- HIGH LEVEL C4I STRUCTURE
- C4I SYSTEMS FUNCTIONAL OVERVIEW
- C4I PHYSICAL CONNECTIVITY
- STATUS of C4I PROGRAMS

ARMY HIGH LEVEL C4I STRUCTURE

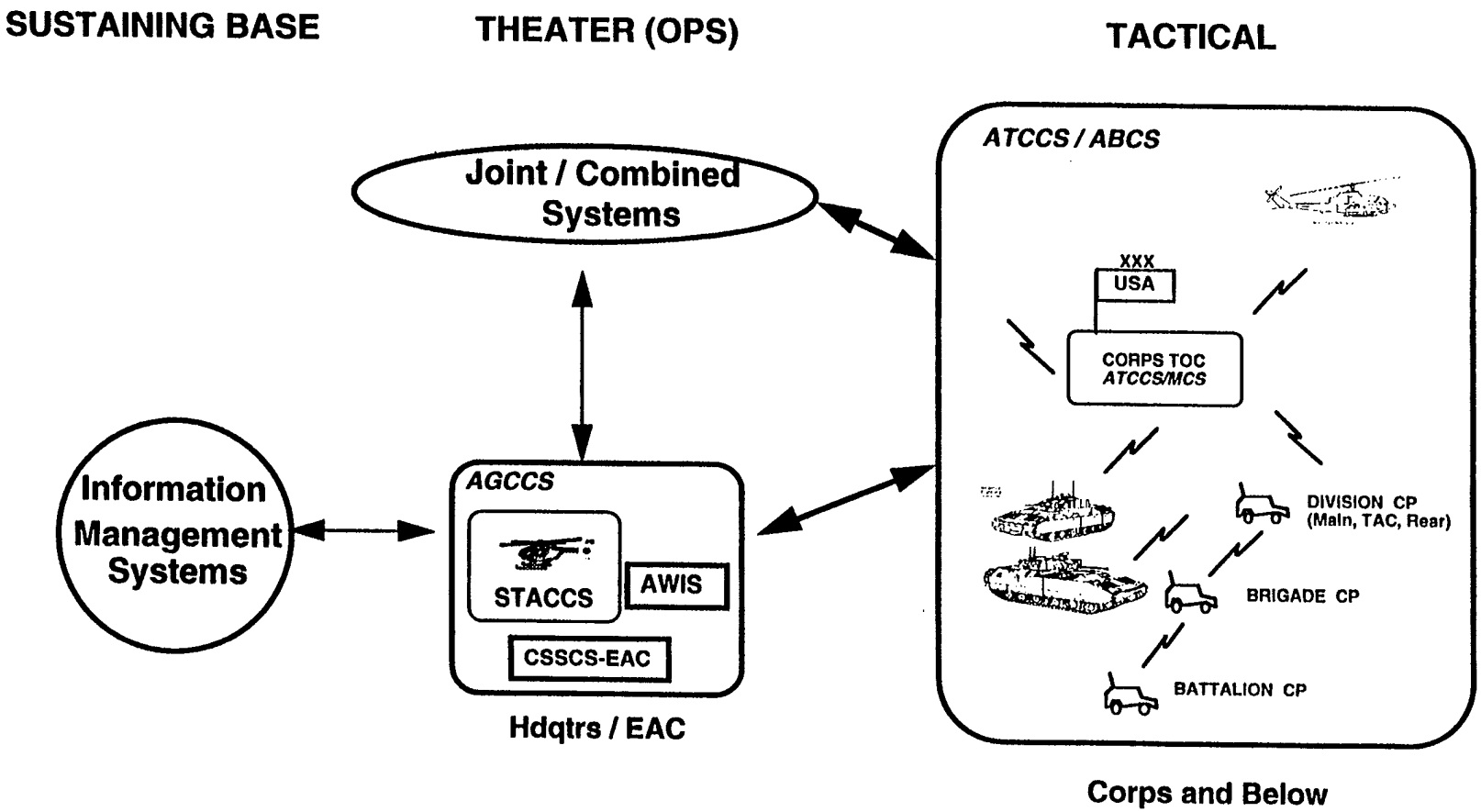

ARMY HIGH LEVEL C4I STRUCTURE

This diagram is adapted from concepts in the Army C2 Master Plan, showing the basic relationships between the two major components of the Army C4I structure. The Army clearly divides its operations between Theater and Corps (and below.)

ABCS Army Battle Command System

AGCCS Army Global Command and Control System. Merges the strategic and theater components of the Army as an initial step in the migration to the Army Battle Command System.

ATCCS Army Tactical Command and Control System; it is part of the Army Command and Control System (ACCS) concerned primarily with employment. It will soon be called the Army Battle Command System (ABCS).

AWIS Army Worldwide Information System. The Army element of WWMCCS. It will be overtaken by the Army GCCS (a migration of AWIS, STACCS, and CSSCS-EAC into one system)

Corps The highest operational unit at the tactical level in the Combat Zone (CZ).

CP Command Post

CSSCS-EAC Combat Service Support Control System for Echelons Above Corps

EAC Echelons Above Corps

Info. Mgmt. Systems Information Management Systems. Resources and activities that are concerned with coordinating, planning, organizing, analyzing, integrating, evaluating, and controlling information.

MCS Maneuver Control System is one of the major components of the ATCCS.

STACCS Standard Theater Army Command Control System. The theater level data processing support system initially developed by the Army European Command.

Sustainment Resource acquisition and management, and the development and maintenance of readiness for combat.

TAC Tactical Command Post

TOC Tactical Operations Center

WWMCCS World Wide Military Command and Control System is the current joint command and control system to be replaced by the Global Command and Control System (GCCS).

ARMY C4I SYSTEMS FUNCTIONAL OVERVIEW (NEAR TERM)

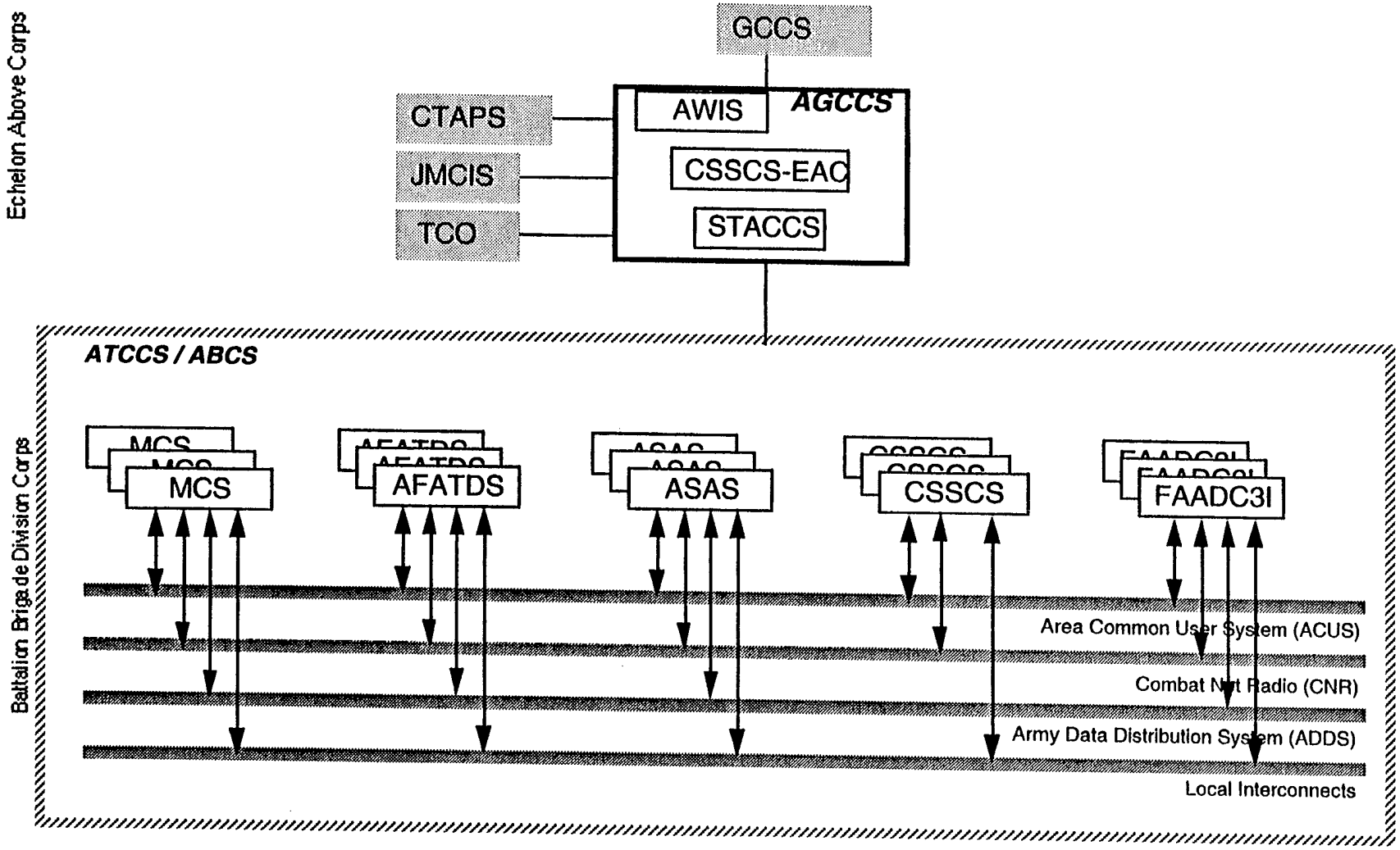

ARMY C4I SYSTEMS FUNCTIONAL OVERVIEW (Near Term)

This diagram depicts the relationships among the key Army C4I systems circa 1994.

ABCS Army Battle Command System to which ATCCS is transitioning.

ACUS Area Common User System, is a collection of Mobile Subscriber Equipment (MSE) that provides voice and data communications for Army Corps and their divisions, capable of handling 5 division corps in an area of 37,000 square kilometers.

ADDS Army Data Distribution System is a family of secure, jam-resistant, near real-time, data communications, and position location reporting, navigation, and identification systems. It provides a near real-time data comm capability to echelon above corps as well as below. It includes EPLRS and JTIDS.

AFATDS Advanced Field Artillery Tactical Data System. Provides automated fire support of close, rear and deep operations. It is composed of a common suite of hardware and software employed in varying configurations at different operational facilities interconnected by tactical communications. Provides support at any level of command.

ASAS All Source Analysis System. Automated tactical intelligence system for Corps, Division, and Echelon Above Corps. Provides all source intelligence fusion network used to generate understanding of enemy deployments, capabilities, vulnerabilities and potential courses of action. Procurement divided into three blocks. Block II will include conversion to Army Common Hardware/Software, and will reach milestone III in 1999.

ATCCS Army Tactical Command and Control System. The different elements of ATCCS are shown with multiple boxes to indicate the system(s) exist at more than one level of command (e.g., Division and Corps.)

AWIS Army Worldwide Information System. The Army element of WWMCCS. It will be overtaken by AGCCS.

CNR Combat Net Radio, is a family of radios that provide for C2 from squad up through corps; mainly voice, there is limited data capability, and will completely replace current single channel radios by 1995. CNR consists of five types of units, including SINCGARS and IHFR.

CP LAN Command Post Local Area Network

CSSCS Combat Service Support Control System. Provides automated support to control of Army CSS, allowing state of readiness to be assessed and courses of action to be war-gamed based upon CSS status.

CSSCS-EAC CSSCS for Echelons Above Corps

CTAPS Contingency Theater Air Control System (TACS) Automated Planning System for the Air Force.

Echelon Above Corps The command level of an Army.

EPLRS Enhanced Position Location Reporting System. Army's version of the Marine's PLRS system.

FAADC3I Forward Area Air Defense Command, Control, Communications, and Intelligence. Integrates, processes and distributes aerial target information gathered from ground based and other sensors, Identifications Friend or Foe, Positive Hostile Identification, and Non-cooperative Target Recognition devices. It will interoperate with joint and allied High-to-Medium Altitude Air Defense C2 systems.

IHFR Improved High Frequency Radio

JMCIS Joint Maritime Command Information System developed by the Navy.

JTIDS Joint Tactical Information Distribution System

Local Interconnects Point to point connections, local telephone systems, etc.

MCS Maneuver Control System. Supports operations planning and control for any part of the Corps and below Army Command and Control System. Provides information on own forces, enemy forces and battlefield characteristics to commander and staff. Displays data generated within air/land combat environment. MCS will transition to common hardware/software in 1994 and Final Operational Capability (FOC) will be 1995.

SINCGARS Single Channel Ground and Airborne Radio System

STACCS Standard Theater Army Command and Control System

TCO Tactical Combat Operations is a Marine Corps system.

WWMCCS Worldwide Military Command and Control System. The Army component of the WWMCCS ADP Modernization plan is the Army Worldwide Information System (AWIS).

ARMY C4I PHYSICAL CONNECTIVITY

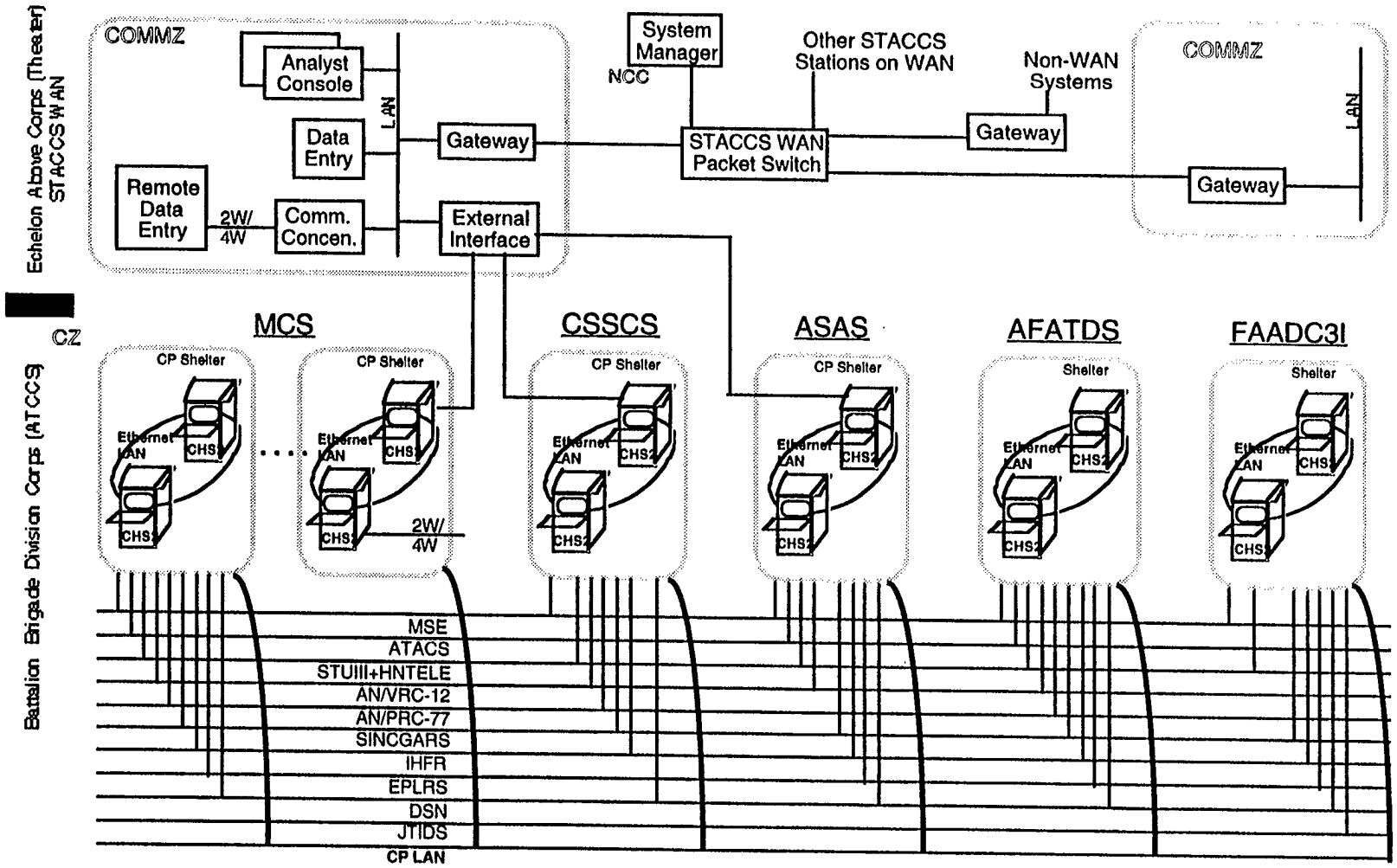

ARMY C4I PHYSICAL CONNECYIVITY

This diagram shows key Army C3I system connectivity, for the time frame circa 1995.

AFATDS	Advanced Field Artillery Tactical Data System.
AN/PRC-77	A radio in the CNR family. Replaced by SINCGARS.
AN/VRC-12	A small unit radio in the CNR family. Replaced by SINCGARS.
ASAS	All Source Analysis System.
ATACS	Army Tactical Area Communications System, which is the existing component ACUS. Eventually superseded by MSE.
ATCCS	Army Tactical Command Control System
CHS2	Common Hardware Software 2. The standard computing resources provided for ATCCS component systems. CHS2 will be first available in FY95.
COMMZ	Communications Zone; rear part of theater of operations (behind but continuous with the CZ) which contains the lines of communications, supply, and evacuation, and other agencies for support and maintenance.
CP	Command Post
LAN	Local Area Network
CSSCS	Combat Service Support Control System.
CZ	Combat Zone; that area required by combat forces for the conduct of operations.
DSN	Defense Switched Network.
EPLRS	Enhanced Position Location Reporting System. Provides secure jam-resistant near real-time data communications support for ATCCS. It is a time division multiple access system using frequency hopping spread spectrum waveform in UHF. Additionally provides position location and reporting to the user and their headquarters (if equipped.) IOC is 1997.
FAADC3I	Forward Area Air Defense C3I.
Gateway	STACCS WAN connections to other networks.
HFR	Improved High Frequency Radios; a component of CNR.
JTIDS	Joint Tactical Information Distribution System which supports TADIL-J.
LAN	Local Area Network; Army will use the IEEE 802.3 Ethernet standard.
MCS	Maneuver Control System.
MSE	Mobile Subscriber Equipment. The new ACUS equipment that will allow for circuit switch or packet switch subscribers. Provides means for communicating in both division and corps areas of operation.
NCC	Network Control Center, for the STACCS WAN
Packet Switch	Central switching system at a STACCS WAN node to connect to other STACCS WANs and LANs.
Shelter	Army uses several mobile buildings for C2 centers.
SINCGARS	Single Channel Ground and Airborne Radio System. A family of VHF combat net radios which provides the primary means of command and control for Infantry, Armor and Artillery units.
STACCS WAN	Standard Theater Army Command and Control System Wide Area Network.
STUIII + HNTELE	Secure Telephone Unit III working in conjunction with a Host Nation Telephone system. The STU-III is a low cost wide band, two-wire secure telephone with up to 9600 baud data rate capabilities.
2W/4W	Two- or four- wire local telecommunications.

US ARMY C4I STATUS

- Common Hardware / Software (CHS-II) contract awarded to GTE Corp./Sun Microsystems Inc. team in Sept. 1994. Incumbent was Miltope/Hewlet Packard. (This contract is on hold, since a protest has bee filed against it.)
- Initial effort to transition systems to GCCS will be done under the AGCCS procurement which integrates strategic and theater functional components above the Corps level. [AWIS, STACCS, and CSSCS-EAC --->AGCCS] Contract award expected soon.
- Started migration of legacy systems under ATCCS program which provides the functional components for the Command Posts at Corps level and below. The transition of ATCCS to GCCS wil be done under the Army Battle Command System (ABCS) program.
- Integrated Interoperability Demonstration (IID) of ATCCS functionality for Corps and below was conducted at Ft. Hood on 24-26 Aug. 94
- Army has the lead on a new C4I Digitization of the Battlefield initiative. The Army will be working closely with the Marine Corps to implement this capability to be demonstrated in the Brigade '96 experiment planned by the Army with participation by the other services.

US AIR FORCE

- HIGH LEVEL C4I STRUCTURE
- C4I TACS STRUCTURE
- C4I SYSTEMS FUNCTIONAL OVERVIEW
- C4I PHYSICAL CONNECTIVITY
- STATUS of C4I PROGRAMS

AIR FORCE HIGH LEVEL C4I STRUCTURE

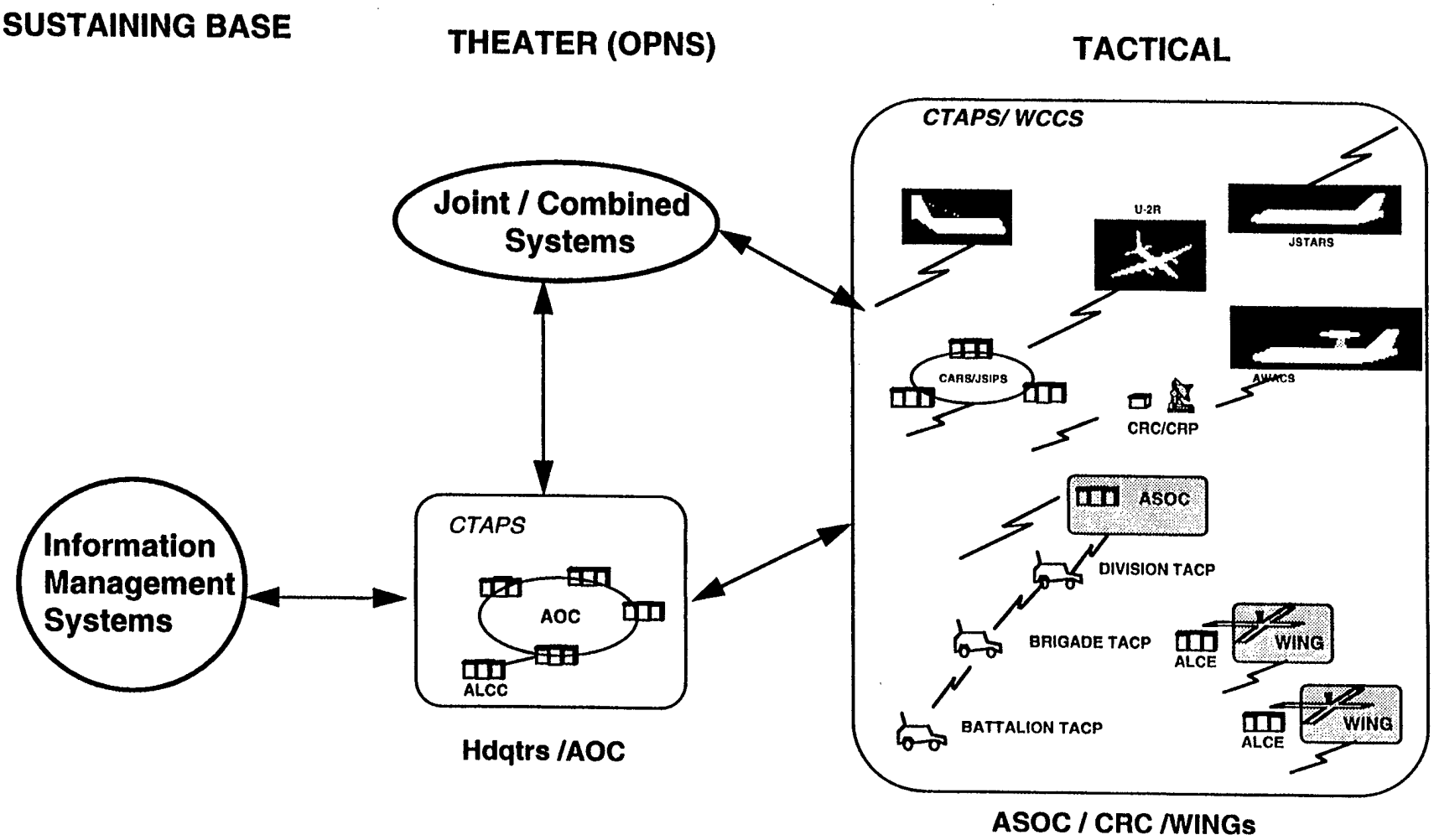

AIR FORCE HIGH LEVEL C4I STRUCTURE

This diagram is adapted from concepts in the Air Force Systems Master Plan, which is part of the Air Force's HORIZON strategy for "optimizing C4I capabilities from the present day into the 21st century."

ALCC	Air Lift Control Center
ALCES	Air Lift Control Element
AOC	Air Operations Center
ASOC	Air Support Operations Center
AWACS	Airborne Warning & Control System (E3-A). Wide area air surveillance and control of defense, including airspace management. Can cue interceptors on air targets.
CARS/JSIPS	Contingency Airborne Reconnaissance System. Povides SIGINT, imagery, and target data. Also referred to as the Joint Service Imagery Processing System.
CRC	Control & Reporting Center
CRP	Control & Reporting Post
CTAPS	Contingency Theater Automated Planning System is a program that produces products that automate the Air Control System. The CTAPS architecture is based on an evolutionary development and procurement philosophy making maximum use of commercial hardware and software technology.
JSTARS	Joint Surveillance Target Attack Radar System (E-8). Provides target location updates of ground vehicles, to the Army, using a synthetic aperture radar (SAR). Also has capability to conduct onboard analysis and display of SAR images to support near real-time target detection, identification, and reporting to attack aircraft within line of sight of JSTARS.
TACP	Tactical Air Control Party
TBM	Theater Battle Management
U2-R	Reconnaissance aircraft. Collects intelligence data processed by the CARS/JSIPS sysstem.
WCCS	Wing Command and Control System provides decision support to Air Force wings at the unit level.

AIR FORCE C4I TACS STRUCTURE

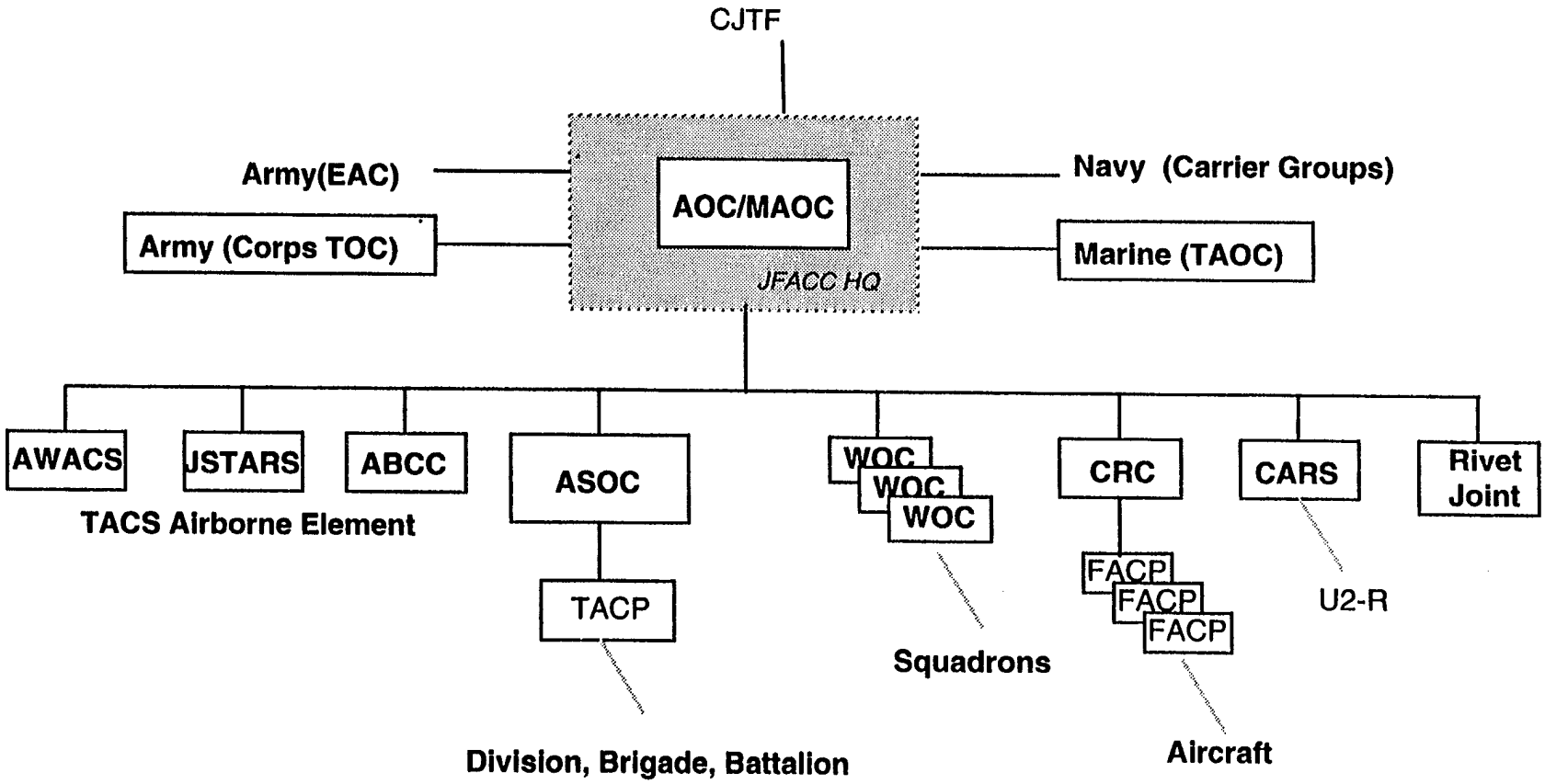

AIR FORCE C4I TACS STRUCTURE

This diagram shows the high level structure of the Air Force for tactical (not strategic in the classic sense) C4I purpose. The boxes represent Air Force command centers (some airborne). AWACS, JSTARS and Rivet Joint provide functionality beyond the Air Force to other services. The AOC is the facility that houses the JFACC. The AOC may be mobile (thus MAOC).

ABCCC Airborne Battlefield Command and Control Center. This key airborne center is highly connected to other Air Component elements, though it has no sensing capabilities of it's own. Houses tactical displays and extensive communications capabilities. Allows for airspace management of wider scope than FACP.

AOC Air Operations Center. Command center for the commander of the air component. From where daily Air Tasking Orders (ATOs) are generated.

AFAC Airborne Forward Air Controller. Manages close air support, controls attacks, and assess damage.

ASOC Air Support Operations Center. Air Force unit collocates with Army ground based mobile shelters. Provides control of Army units, manages TACPs, and coordinates with Army operations.

AWACS Airborne Warning and Control System (E3-A). Wide area air surveillance and control of defense, including airspace management. Can cue interceptors on air targets. Some AWACS have been modified to detect ocean surface targets to support maritime surveillance missions.

CARS Contingency Airborne Reconnaissance System. Provides SIGINT, imagery, and target data. Also referred to (in future architectures) as the Joint Services Imagery Processing System (JSIPS).

CJTF Commander Joint Task Force

CRC Control & Reporting Center

EAC Echelon Above Corps (Army)

FACP Forward Air Controller Post. Provides air surveillance and manages local air space.

JFACC HQ Joint Force Air Component Commander Headquarters

JSTARS Joint Surveillance Target Attack Radar System (E-8).

MAOC Mobile Air Operations Center. (The AOC may be integrated with the Navy sytems on a carrier.)

Rivet Joint Reconnaissance aircraft designated E-135. Receives and processes long range SIGINT in support of ELINT and COMINT missions. Capability to display and analyze data, including identification, location, and parametric. Supports updating potential threat electronic order of battle (EOOB), analyses of theater's current electronic signatures, and provides indications and warnings of threat activity.

TACP Tactical Air Control Party. Mobile ground controller for air support for Army. Subordinate to ASOC.

TACS Theater Air Control System

TAOC Tactical Air Operations Center (Marine Corps)

TOC Tactical Operations Center (Army)

U2-R Reconnaissance aircraft. Intel collection, SIGINT, imagery.

WOC Wing Operations Center. The implementor of ATOs, Force readiness, detailed mission planning, execution of orders, and reporting of status.

AIR FORCE C4I SYSTEMS FUNCTIONAL OVERVIEW

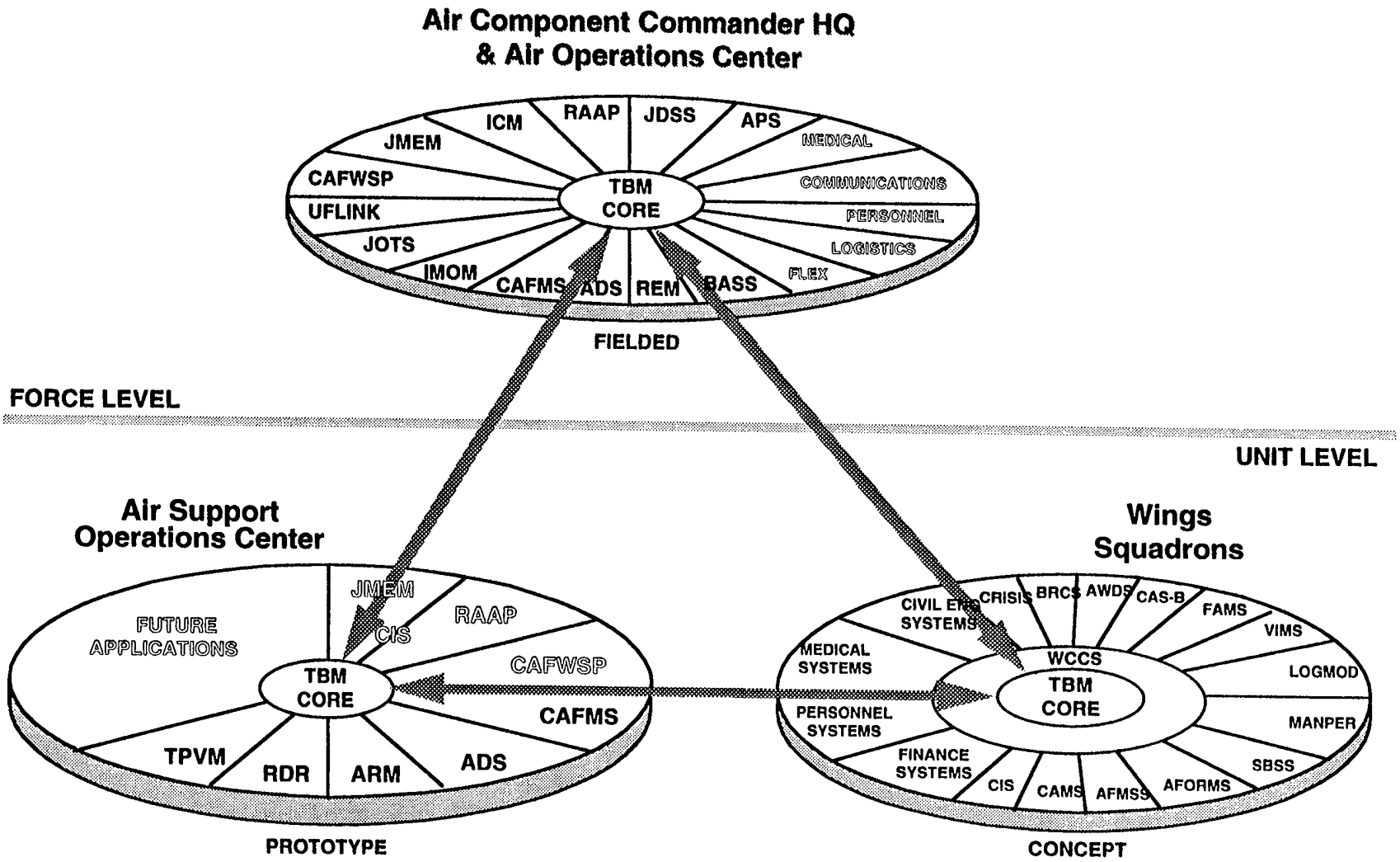

AIR FORCE C4I SYSTEMS FUNCTIONAL OVERVIEW

This diagram depicts the CTAPS products which support the C4I functionality in the prime Air Force C2 operational centers.

ADS	Airspace Deconfliction System (Airspace planning; produce Airspace Control Order)
AFMSS	Air Force Mission Support System (Aircrew mission planning)
AFORMS	Air Force Operational Resource Management System
APS	Advanced Planning System (ATO planning)
ARM	Air Request Manager
AWDS	Automated Weather Dissemination System
BRCS	Base Recovery after attack Comm System
CAFMS	Computer Assisted Force Management System (ATO management)
CAFWSP	Combat Air Forces Weather Support Program (Contains the Defense Automated Weater System.)
CAMS	Consolidated Aircraft Maintenance System
CAS-B	Combat Ammunition System - Base
CIS	Combat Intelligence System
CTAPS	Contingency Theater Automated Planning System
ICM	Intelligence Correlation Module (Orders of Battle correlation and management)
IMOM	Improved Many-On-Many (EC analysis)
JMEM	Joint Munitions Effectiveness Manual (Weaponeering)
JOTS	Joint Operational Tactical System (Navy)
LOGMOD	Logistics Module
MANPER	Manpower and Personnel Module
RAAP	Rapid Application of Air Power (Targeting)
RDR	Remote Data Requestor
REM	Route Evaluation Module (Route Analysis)
TBM	Theater Battle Management
TPVM	Target Plotting and Verification Module
UFLINK	Unit to Force Level Link (CTAPS - WCCS interface)
WCCS	Wing Command and Control System (Unit battle management)

AIR FORCE C4I PHYSICAL CONNECTIVITY

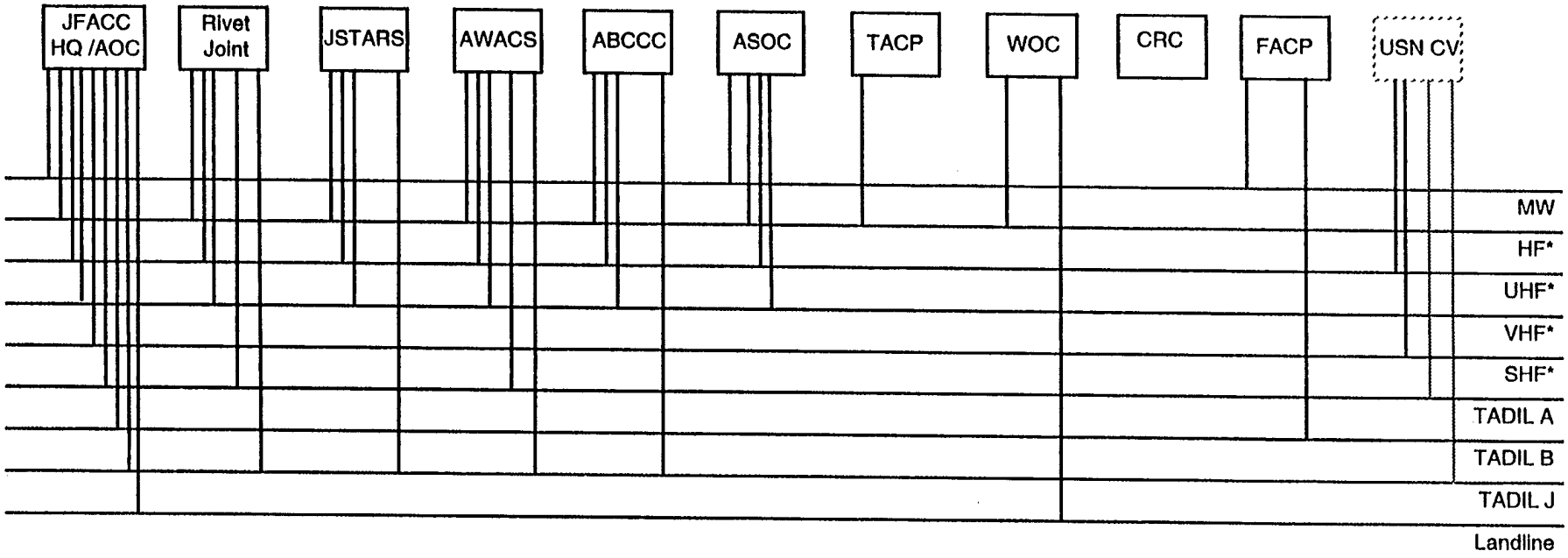

AIR FORCE C4I PHYSICAL CONNECTIVITY

This diagram shows the communications connectivity among the key Air Force centers and a Navy carrier. The asterisk in HF/UHF/VHF/SHF indicates that there are multiple connecitivities with these media.

ABCCC	Airborne Battlefield Command and Control Center
AOC	Air Operations Center
ASOC	Air Support Operations Center
AWACS	Airborne Warning and Control System
FACP	Forward Air Controller Post
HF	High Frequency
JFACC	Joint Force Air Component Commander
JSTARS	Joint Surveillance Target Attack Radar System
MW	MicroWave (Line of Sight LOS)
Rivet Joint	E-135 reconnaissance aircraft.
SHF	Super High Frequency
TACP	Tactical Air Control Party
TADIL A	Tactical Digital Link - A supported by Link-11.
TADIL B	Tactical Digital Link - B
TADIL J	Tactical Digital Link - C supported by JTIDS.
UHF	Ultra High Frequency
USN CV	US Navy aircraft carrier
VHF	Very High Frequency
WOC	Wing Operations Center

US AIR FORCE C4I STATUS

- Prototype Air Support Operation Center (ASOC) fielded in FY94 using CTAPS modules
- Theater Battle Management (TBM) core follow-on RFP has been issued. The TBM integration effort is expected to build on the CTAPS technical architecture implemented at the Force level. Prospective vendors were invited to a briefing held at Mitre Corp. in Bedford, Mass. in Aug. , 1994.
- The AFCAC replacement is not expected for two more years. A procurement to be a bridge between AFCAC and its follow-on is being planned now.

US MARINE CORPS

- C4I HIGH LEVEL STRUCTURE
- MAGTF C4I STRUCTURE (NEAR TERM)
- MAGTF C4I SYSTEMS FUNCTIONAL OVERVIEW (1997+)
- GENERIC MAGTF CONNECTIVITY
- STATUS of C4I PROGRAMS

MARINE HIGH LEVEL C4I STRUCTURE

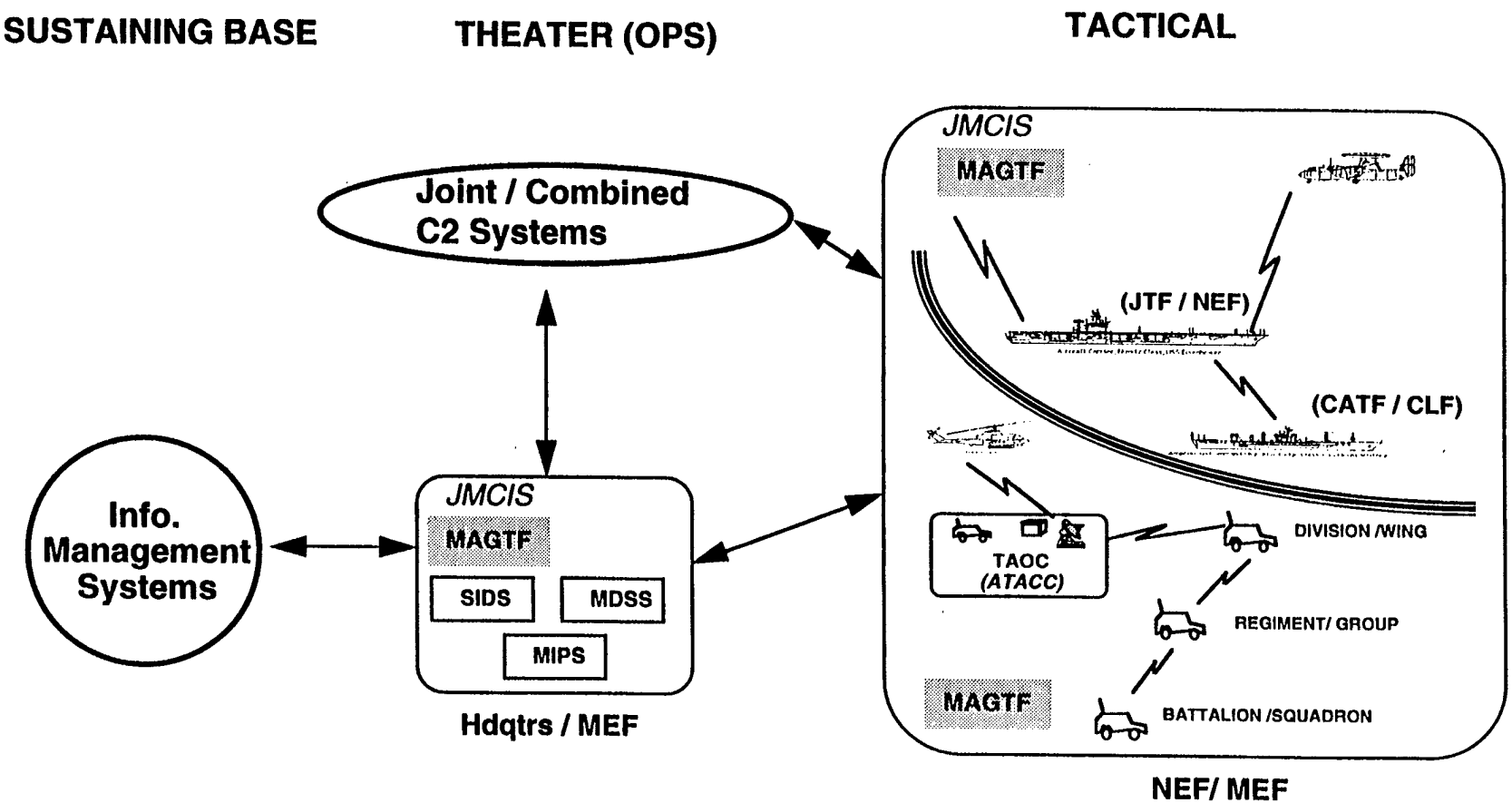

MARINE CORPS HIGH LEVEL C4I STRUCTURE

The MAGTF is the Marine Corp's C2 infrastructure, whether afloat or ashore, which enables the Marine Corps to support the strategic through tactical levels of war. All MAGTFs, regardless of size, have the same fundamental structure: a command element, a ground combat element, an aviation combat element, and a combat service support element.

ATACC	Advanced Tactical Air Command Central
CATF	Commander Amphibious Task Force
CLF	Commander Landing Force
JMCIS	Joint Maritime Command Information System is the Navy's integrated C2 system
JTF	Joint Task Force
MAGTF	Marine Air - Ground Task Force
MDSS	MAGTF Deployment Support System
MEF	Marine Expeditionary Force
MIPS	MAGTF Integrated Personnel System
NEF	Naval Expeditionary Force
SIDS	Secondary Imagery Distribution System
TAOC	Tactical Air Operations Center

MAGTF C4I STRUCTURE (1995 - 1996)

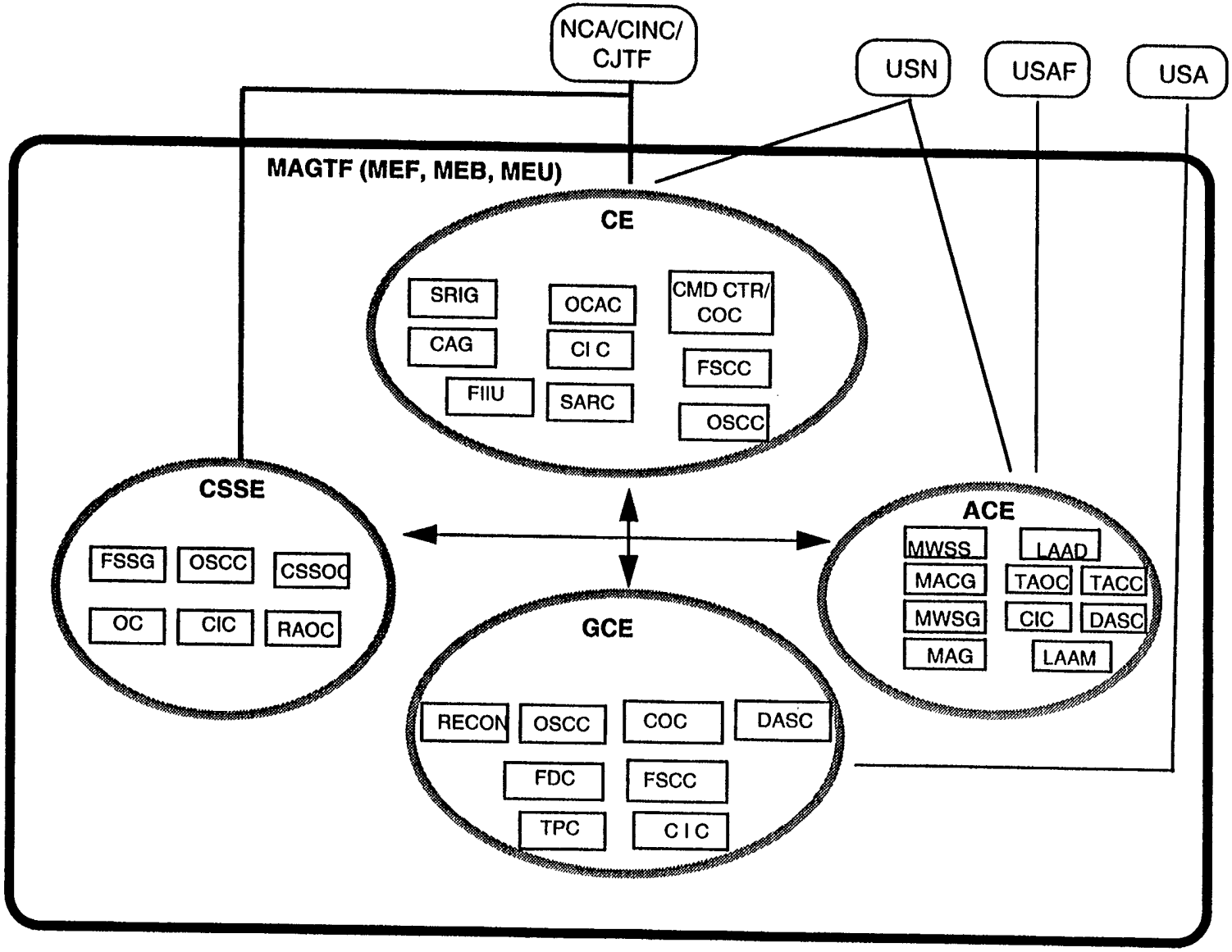

MARINE CORPS C4I STRUCTURE (1995 - 1996)

This diagram shows the components of the Marine Corps C2 structure. The items in rectangles are centers possible in a MAGTF. A MAGTF, by no means, would include all the centers shown above for any one mission. The diagram also shows the basic relationships that exist among elements of a MAGTF and with external (to the USMC) entities.

ACE Aviation Combat Element. Ranges in size from a helo squadron to one or more aircraft wings; it may include offensive air support, assault support, anti-air warfare, electronic warfare, and C2 organizations.

CAG Civil Affairs Group

CE Command Element. Provides single headquarters for command and coordination of ground, air, and combat service support.

CIC Combat Intelligence Center

CINC Commander in Chief

CJTF Commander Joint Task Force

CMD CTR Command Center

COC Combat Operations Center

CSSE Combat Service Support Element. Is tailored to provide logistics support, including supply, maintenance, engineering, etc. services.

CSSOC Combat Service Support Operations Center

DASC Direct Air Support Center. An expandable 8'x8'x20' shelter used to coordinate close air support, assault support, and air recon. Current DASC replaced by an improved version (IDASC) with IOC of 93.

FDC Fire Direction Center

FIIU Force Imagery Interpretation Unit

FSCC Fire Support Coordination Center

FSSG Force Service Support Group

GCE Ground Combat Element. Ranges in size from an infantry battalion to one or more divisions. May include artillery, tank, etc. orgs.

LAAD Low Altitude Air Defense

LAAM Light AntiAircraft Missile

MACG Marine Air Control Group

MAG Marine Aircraft Group

MAGTF Marine Air-Ground Task Force. Combined armed forces consisting of ground, air, and combat service support forces, under the direction and control of a single commander. It is the overall conceptual framework for forming forces for combat operations.

MEB Marine Expeditionary Brigade. An assault echelon embarked aboard approximately 20 amphibious ships. CE commanded by a Brigadier General.

MEF Marine Expeditionary Force. Active Marine forces are organized into three MEFs, one in the Atlantic Command and two in the Pacific Command. Largest and most powerful of MAGTFs, the CE is commanded by a Major General or Lieutenant General.

MEU Marine Expeditionary Unit. Smallest air-ground task force, embarked aboard 3-5 amphibious ships, CE commanded by a Col.

MWSG Marine Wing Support Group

MWSS Marine Wing Support Squadron

NCA National Command Authority

OC Operations Center

OCAC Operations Control & Analysis Center

OSCC Operational Systems Control Cemter

RAOC Rear Area Operations Center

RECON Reconnaissance

SARC Surveillance & Reconnaissance Center

SRIG Surveillance, Reconnaissance & Intelligence Group

TACC Tactical Air Command Center. Provides the tactical air commander with communications, system processing, data correlation and displays needed to support planning and directing of overall air support. The systems and components that make up the TACC will be replaced by the Advanced TACC (ATACC) beginning in FY95.

TAOC Tactical Air Operations Center is used for exercising command and control of air operations.

TPC Target Planning Center

USA United States Army

USN United States Navy

USAF United States Air Force

USMC MAGTF ELEMENTS and KEY SYSTEMS (1997+)

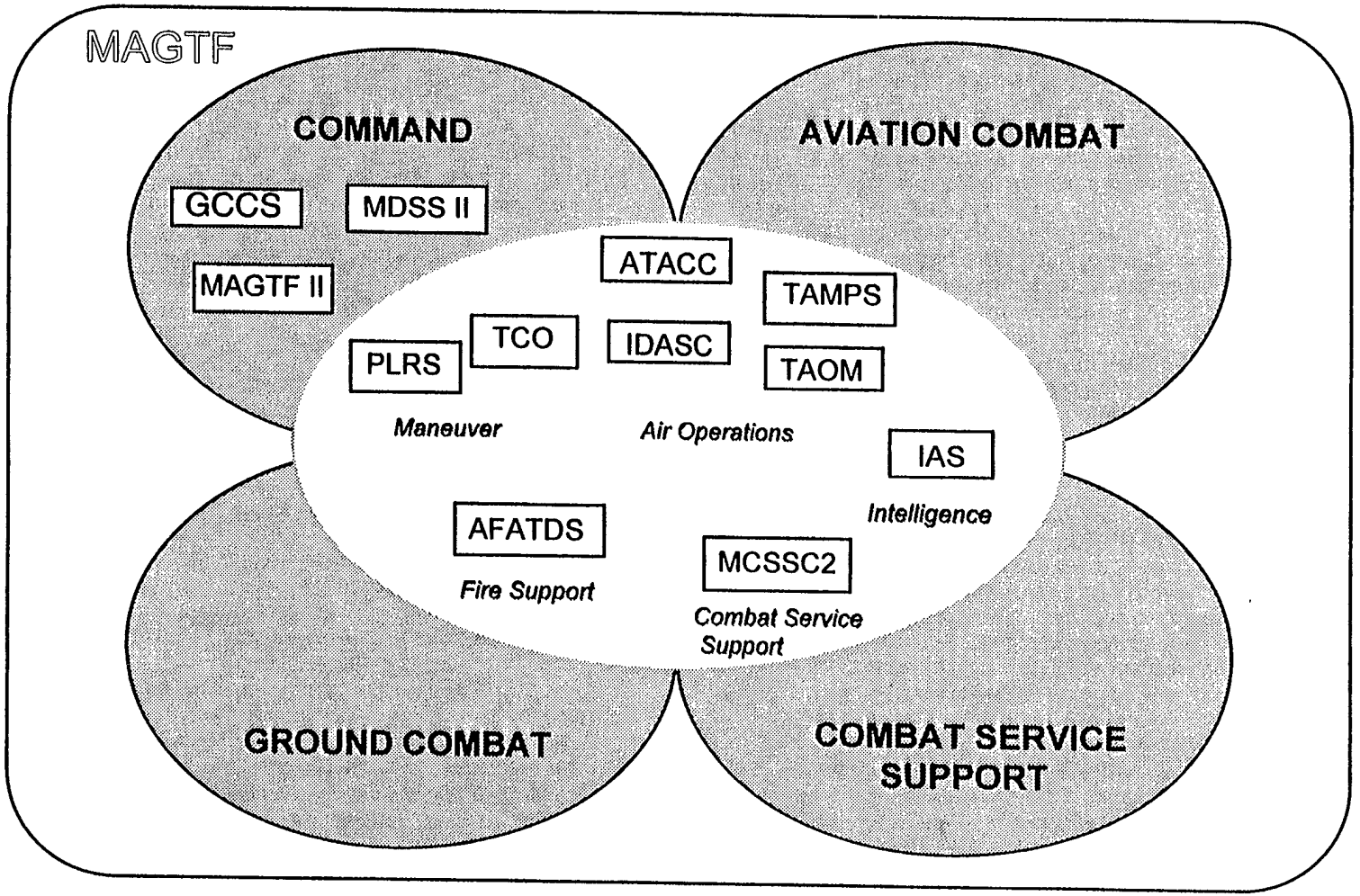

USMC MAGTF ELEMENTS and KEY SYSTEMS (1997+)

This diagram provides an executive level overview of MAGTF C4I systems by functional area and MAGTF element (for the 1997+ time frame.) The large gray ovals represent possible MAGTF elements. Each of the functional areas for C2 is derived from the Marine Corps FMFM 3, Command and Control document. The rectangles represent the major automated system supporting C2 functions. The systems in the large white central oval can be used to perform functions for any of the four possible MAGTF elements. Three systems (GCCS, MAGTF II, MDSS II) are unique to the Command element.

AFATDS	Advanced Field Artillery Tactical Data System
ATACC	Advanced Tactical Air Command Central provides the tactical air commander with the decision aids needed to support planning and directing of overall air support.
GCCS	Global Command and Control System is the C2 system for Joint Services.
IDASC	Improved Direct Air Support Central
IAS	Intelligence Analysis System
JMCIS	Joint Maritime Command Information System is the Navy's C2 system.
MAGTF	Marine Air Ground Task Force
MAGTF II	Marine Air Ground Task Force II system serves as a bridge between the MAGTF logistics automated information systems and the Joint Operation Planning and Execution System (JOPES),
MCSSC2	Marine Combat Service Support Command and Control
MDSS II	MAGTF Deployment Support System II enables Commanders at various echelons of a MAGTF to build and maintain a database that contains force and equipment data reflecting how a MAGTF is configured for deployment.
PLRS	Position Location Reporting System
TAMPS	Tactical Aircraft Mission Planning System developed by the Navy.
TAOM	Tactical Air Operations Module is used to manage the air traffic control, providing real-time C2 of all MAGTF air and surface-to-air missile assets.
TCO	Tactical Combat Operations is the focal point of the MAGTF C2 network. Provides commander, staff, and subordinates automation to receive, fuse, display, and disseminate C2 information, for both planning and direction.
WWMCCS	World Wide Military Command and Control System

Naval Command, Control and Ocean
Surveillance Center
Research Devlopment Test &
Evaluation Division

NRaD Command and Control Department

USMC GENERIC MAGTF CONNECTIVITY

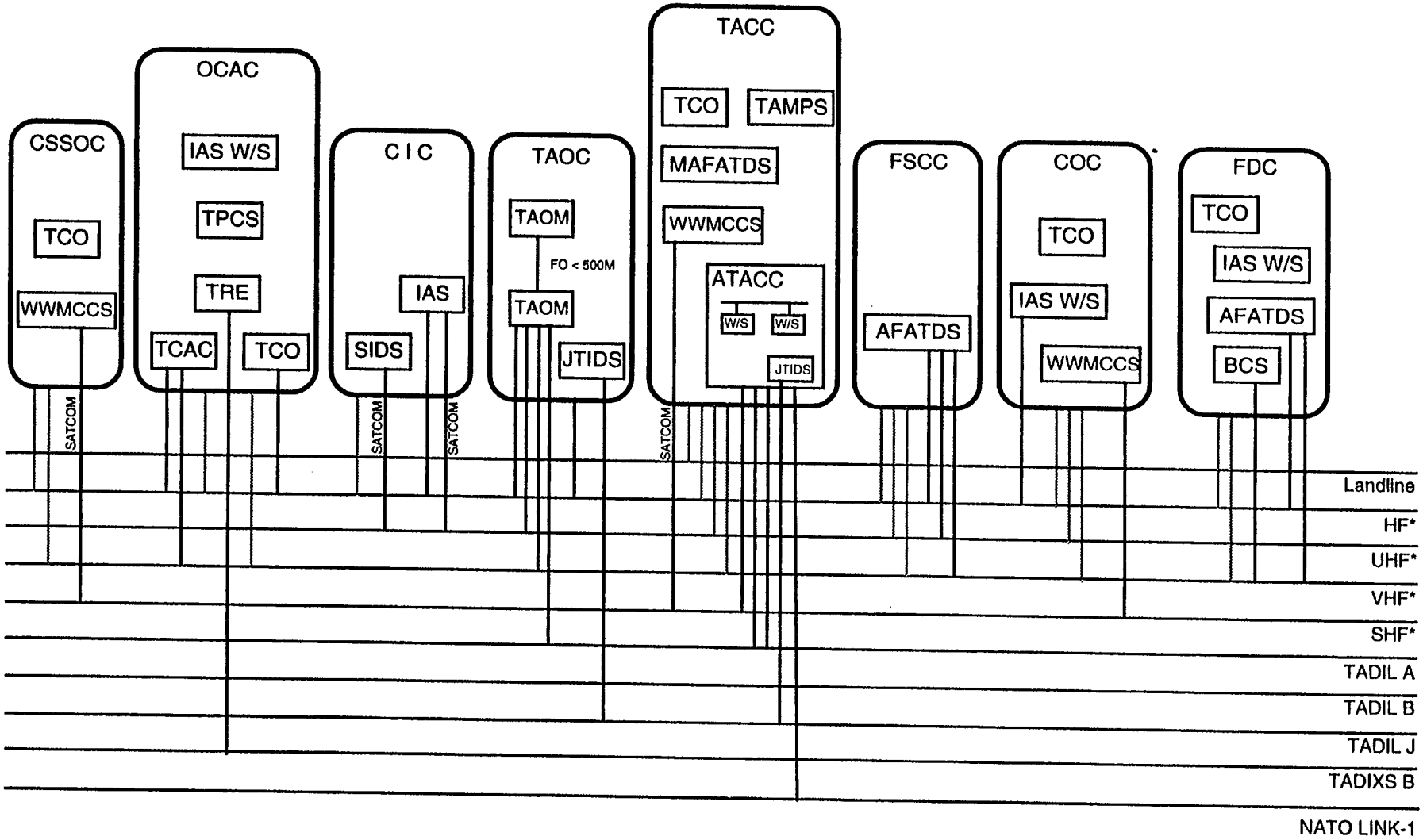

USMC GENERIC MAGTF CONNECTIVIITY

This diagram shows nominal connectivity for a MAGTF. Different instantiations of the MAGTF (as a MEF, MEB, or MEU) will have different combinations of centers and configurations of systems in those centers.

Gray lines connecting centers and communications services imply connection to multiple systems in that center (through switching.)

Detailed definitions of the following acronyms can be found on the preceeding pages.

AFATDS	Advanced Field Artillery Tactical Data System
ATACC	Advanced Tactical Air Command Central
BCS	Battery Computer System
CIC	Combat Intelligence Center
CMD CTR	Command Center
COC	Combat Operations Center
CSSOC	Combat Service Support Operations Center. The CSSOC shown is for the Force Service Support Group Headquarters.
FDC	Fire Direction Center
FO	Fiber Optic
FSCC	Fire Support Coordination Center
HF	High Frequency
IAS	Intelligence Analysis System
IAS W/S	IAS Workstation version
JTIDS	Joint Tactical Information Distribution System
Landline	2W or 4W data and voice
MAGTF II	Marine Air Ground Task Force II system
OCAC	Operations Control and Analysis Center
PLRS	Position Location Reporting System
SATCOM	Satellite communications
SHF	Super High Frequency
SIDS	Secondary Imagery Distribution System
TACC	Tactical Air Command Central
TADIL	Tactical Digital Information Link. Three in use by the Marine Corp. (A, B, J).
TADIXS	Tactical Data Information Exchange System
TAMPS	Tactical Air Mission Planning System
TAOC	Tactical Air Operations Center
TAOM	Tactical Air Operations Module
TCAC	Technical Control and Analysis Center
TCO	Tactical Combat Operations
TPCS	Team Portable COMINT System
TRE	Tactical Receive Equipment
UHF	Ultra-High Frequency
VHF	Very High Frequency
W/S	Workstation. ATACC will use a TBD workstation configuration for consoles.
WWMCCS	World Wide Military Command and Control System

US MARINE CORPS C4I STATUS

- Completed analysis of MAGTF tactical systems to identify candidate systems for migration to the JMCIS environment. Initiated the migration of these systems to an open architecture environment.
- Marine Corps will be the lead Service for JWID-95 with its theme of "C4I for the Joint Expeditionary Warrior."
- Funding for the procurement of the MAGTF C4I Digitization of the Battlefield capability has been allocated for fiscal years 1996 through 1999. The Army has the responsibility for research and development, but will be working closely with the Marine Corps to ensure that Marine requirements are included.
- Plan to demonstrate in JWID-95 a prototype service support logistics system MCSSC2 based on the Army's CSSCS system .

US NAVY

- HIGH LEVEL C4I STRUCTURE
- C4I STRUCTURE (NEAR TERM)
- C4I SYSTEMS FUNCTIONAL OVERVIEW
- STATUS of C4I PROGRAMS

NAVY HIGH LEVEL C4I STRUCTURE

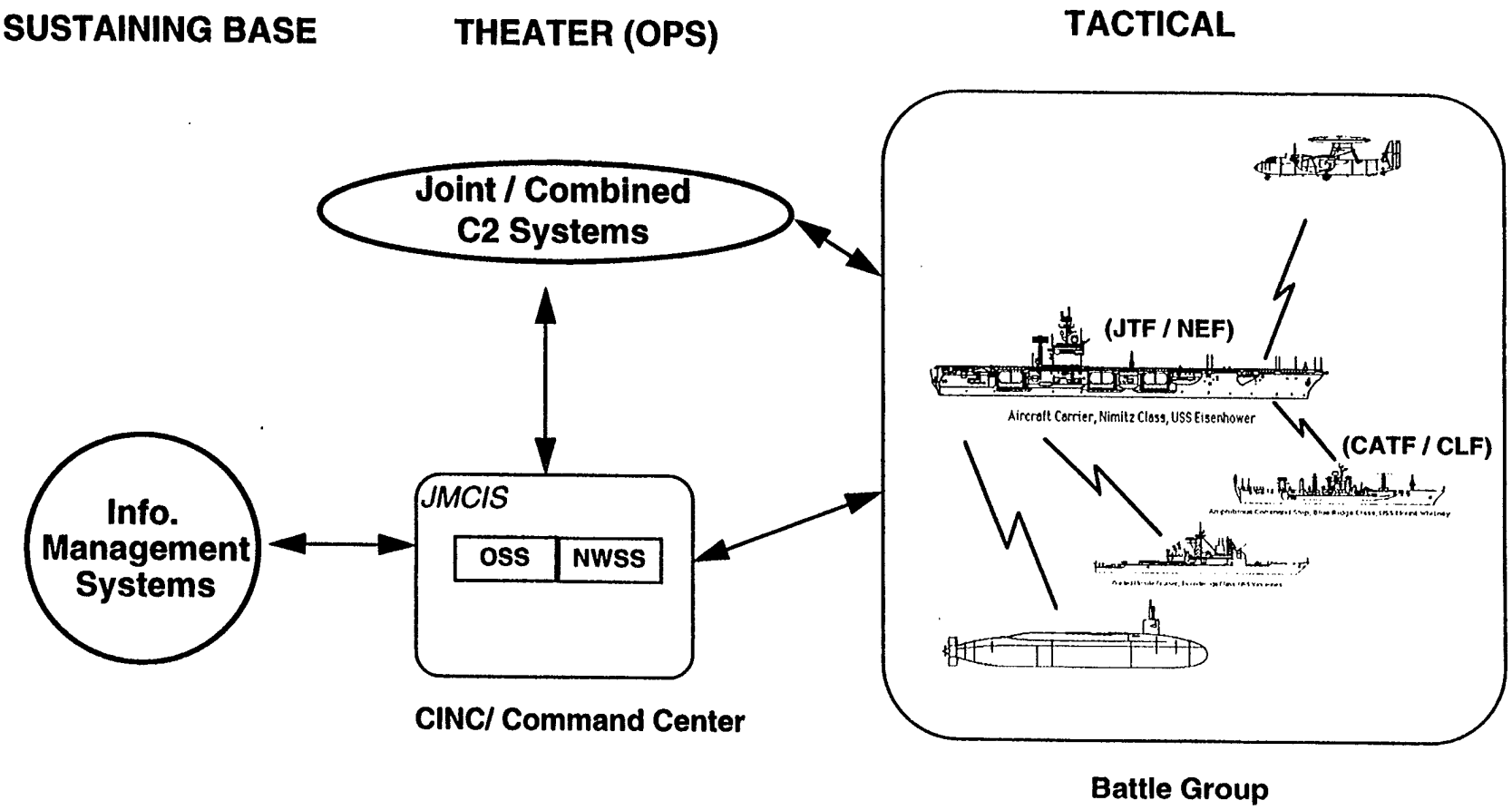

NAVY HIGH LEVEL C4I STRUCTURE

This diagram presents a high level overview of the C4I structure for the Navy Prior to the development of the Navy's Joint Maritime Command Information System (JMCIS), two command and control systems were deployed by the Navy; NTCS-A for the Afloat platforms and OSS for ashore nodes. Under JMCIS, the afloat and ashore systems are integrated into one common system supporting various hardware configurations.

Battle Group	Basic unit of a Naval force. Traditionally composed of one CV, several combatants, and support.
CATF	Commander, Amphibious Task Force
CCC	CINC Command Center is the shore command center for each theater of operations.
CINC	Commander in Chief
CLF	Commander of the Landing Force in amphibious warfare.
CV	Aircraft Carrier
JMCIS	Joint Maritime Command Information System is the Navy's evolutionary command and control system, one of the candidate C2 systems being considered as the basis for the Global Command and Control System planned for Joint use.
JTF	Joint Task Force
NEF	Naval Expeditionary Force
NTCS-A	Navy Tactical System Afloat was the command and control system used on Navy afloat platforms prior to JMCIS.
NWSS	Navy WWMCCS Standardization System. Navy used this system to interface to the Joint WWMCCS system, but this functionality is being integrated into JMCIS.
OSS	Operations Support System was the shore based command and control sytem used to support Fleet Command Centers before being integrated into JMCIS.

Naval Command, Control and Ocean
Surveillance Center
Research Devlopment Test &
Evaluation Division

NAVY C4I STRUCTURE (NEAR TERM)

Command and
Control Department

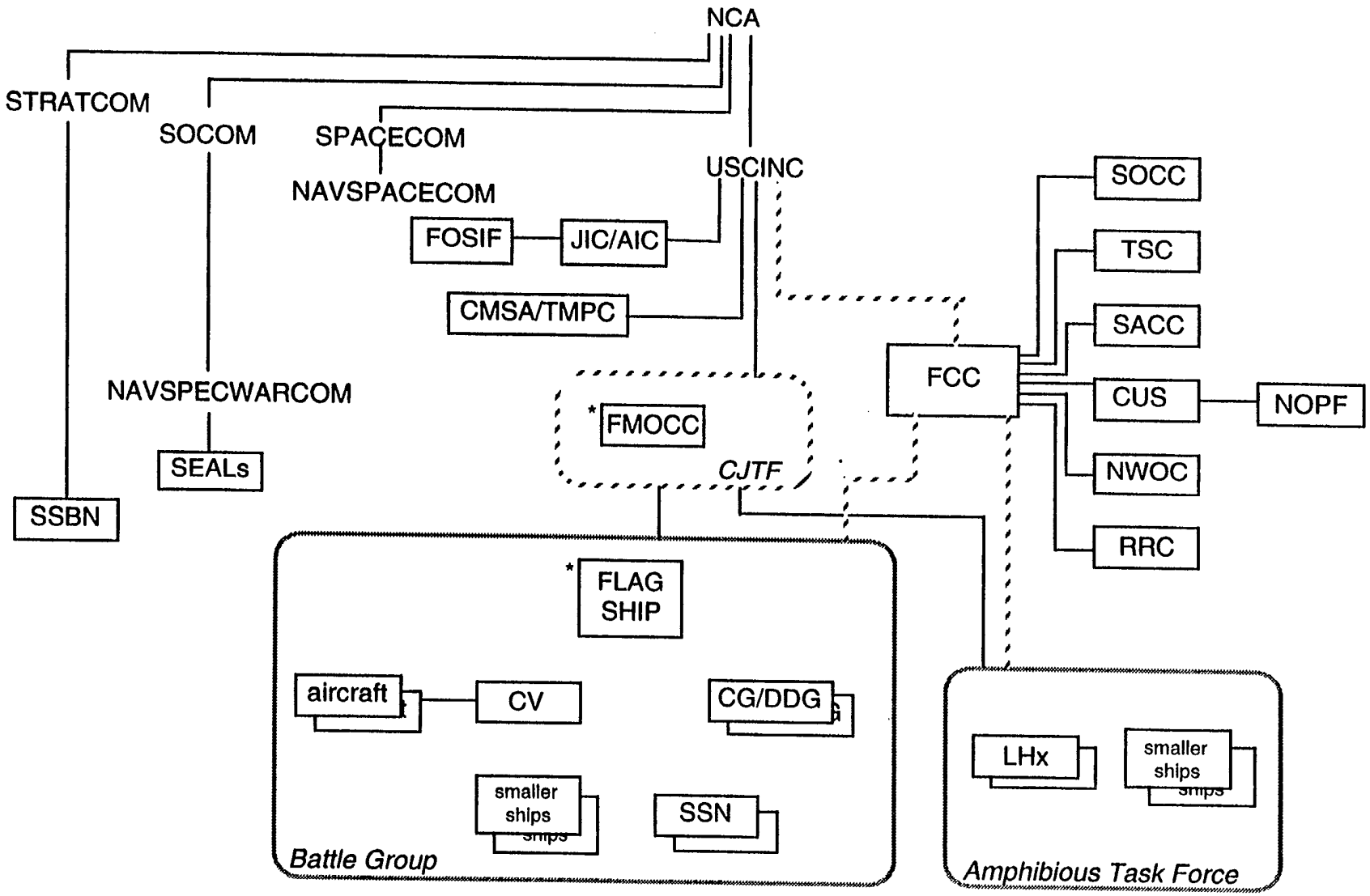

NAVY C4I STRUCTURE (NEAR TERM)

This diagram gives an overview of the key Navy C2 components and their relationships to each other The solid lines indicate a direct command or control. The dashed lines connected to the FCC indicate support (in a Joint context); when the Navy is the only component they default to solid lines. The asterisk next to the FMOCC and Flag Ship indicates that the Naval Component Commander would be in either, but not both places.

aircraft	A variety of aircraft are used by the Navy on CVs.
Battle Group	Basic unit of a Naval force. Traditionally composed of one CV, several combatants, and support.
CG	Guided Missile Cruiser
CJTF	Commander, Joint Task Force
CMSA/TMPC	Cruise Missile Support Activity and Theater Mission Planning Center.
CUS	Commander Undersea Surveillance (Formed from integration of CUSP and CUSL. With the disestablishment of COMUNDERSEASURVPAC, effective Sept. 30,1994 , CUSL in the Atlantic administratively became the single Undersea Surveillance Command. Operational control for CUSP remains with the Commander, ASW Fforce, U.S. Pacific Fleet and CINC, U.S. Atlantic Fleet respectively.)
CV	Aircraft Carrier
DDG	Guided Missile Destroyer
FCC	Fleet Command Center
FMOCC	Fleet Mobile Operations Command Center. Now also called the Joint Mobile Operations Command Center (JMOCC.)
Flag Ship	A Naval Component Commander may be afloat.
FOSIF	Fleet Ocean Surveillance Information Facility.
JIC/AIC	Joint Intelligence Center (for PACOM). In the Atlantic command it is called the AIC.
LHx	Amphibious ships (LHD or LHA), the principal C2 platform for amphibious operations.
NAVSPECWARCOM	Naval Special Warfare Command is the Navy component of SOCOM.
NAVSPACECOM	Naval Space Command
NCA	National Command Authority
NWOC	Naval Western Oceanographic Center. Located at Pearl Harbor. There is an Eastern Center located at Norfolk.
NOPF	Naval Oceanographic Processing Facility
RRC	Regional Reporting Center
SACC	An Ashore ASW Command Center
SEALs	Sea Air Land units deployed as part of Special Operatons Forces.
smaller ships	A variety of ships smaller than a DDG, such as frigates.
SOCC	Submarine Operations Command Center
SOCOM	Special Operations Command is one of the DOD Unified Commands.
SSBN	Ballistic Missile Nuclear Powered Submarine
SSN	Attack Submarine (Nuclear Powered)
STRATCOM	Strategic Command, a Unified Command
TSC	Tactical Support Center (The former AntiSubmarine Warfare Operations Center)
USCINC	United States Commander in Chief

Naval Command, Control and Ocean
Surveillance Center
Research Devlopment Test &
Evaluation Division

Command and
Control Department

NAVY C4I SYSTEMS FUNCTIONAL OVERVIEW

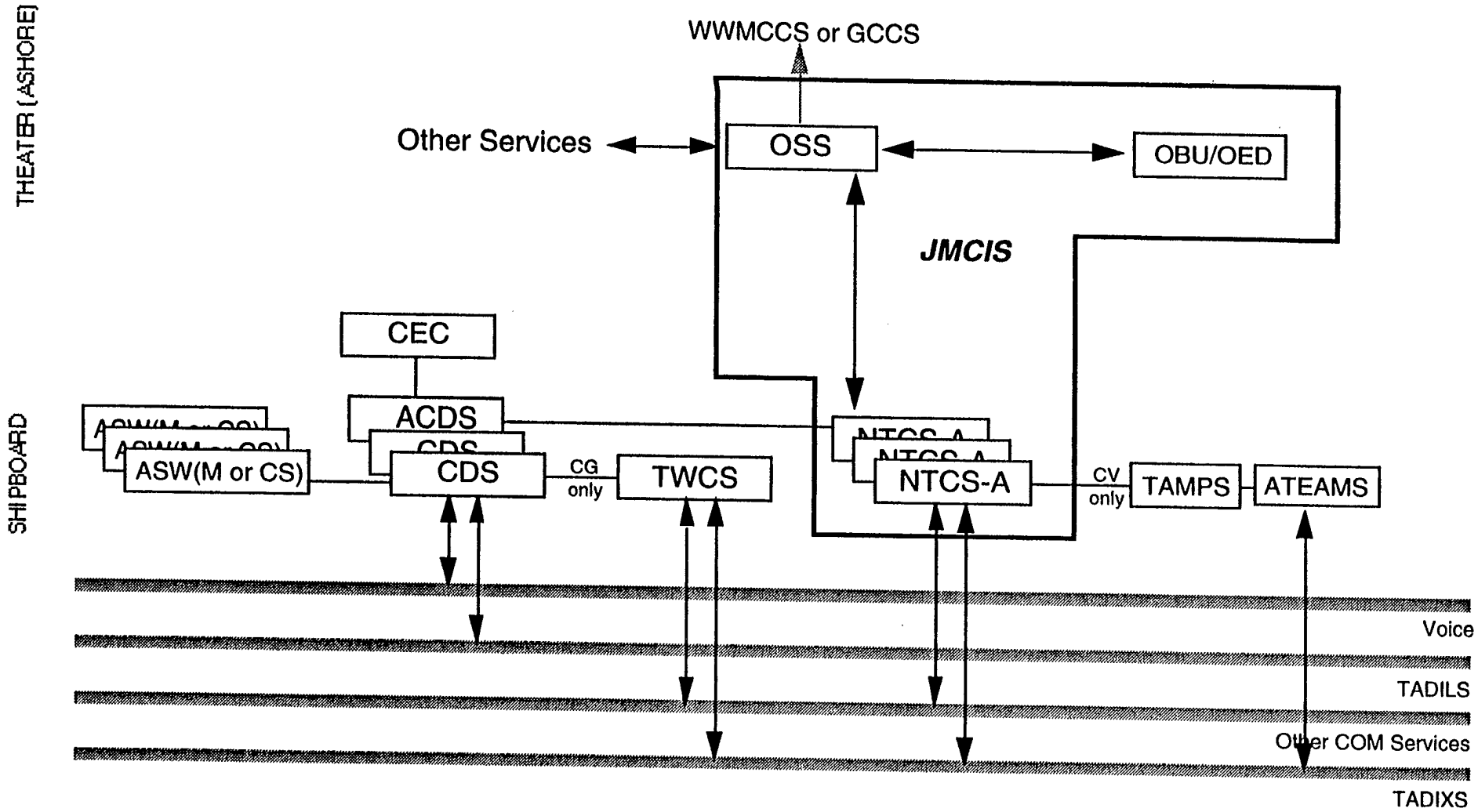

NAVY SYSTEMS FUNCTIONAL OVERVIEW

This diagram depicts the major Navy C4I systems for the near term (circa FY94). Each ship (and shore site) has its own variations. The solid lines without arrows connecting the shipboard systems indicate that the relationships are dependent upon ship type. e.g., TAMPS and TEAMS are found on carriers, while the TWCS is on cruisers.

ASW(M or CS) Anti-Submarine Warfare Module (for carriers) or Anti-Submarine Warfare Combat System (for other combatants.) Supports the Anti-Submarine warfare mission of the ship. Includes mission planning, tactical situation monitoring, and data correlation. ASWCS also provides weapons (e.g., torpedo) control

ATEAMS Advanced TEAMS

CDS Combat Direction System. Used here generically for several different systems: Advanced Combat Direction System (carriers), Aegis Command & Decision (cruisers and some destroyers), and older TDSs (Tactical Data Systems) still found on certain ships. Integrates ownship sensor data and tactical data link information, provides real-time situation monitoring, and performs threat evaluation and weapon assignments.

CEC Cooperative Engagement Capability

GCCS Global Command and Control System. Replacement for WWMCCS.

JMCIS Joint Maritime Command Information System. An integration of various Navy command systems, including NTCS-A, OSS, OBU.

NTCS-A Navy Tactical Command System Afloat. Integrates contact and threat warning data from external sources with data from the afloat sources and sensors. Supports tactical planning and direction of a battle group electronic warfare assets and C3 countermeasures assets. Supports general battle management functions of senior commanders.

OBU/OED Ocean Surveillance Information System (OSIS) Baseline Upgrade/ OSIS Evolutionary Development

OSS Operations Support System. Shore based version of NTCS-A. Supports Fleet Command Center with tactical picture presentation and theater level battle management.

Other COM Services Character Oriented Message services. A variety of character based services (OTCIXS, NAVMACS, etc.) for the exchange of command and control information.

TADILS Tactical Digital Information Links. Bit oriented real-time information distribution for real-time command and control. The USN has: Link 4A (air control, maps to TADIL C standard), Link 11 (track data and force orders, TADIL A standard), and Link 16 (jam resistant track data and force orders, TADIL J standard). Both TADIL A and TADIL J provide for multiservice exchange of information.

TADIXS Tactical Data Information Exchange Systems. Character oriented messages system for command and control information, such as cruise missile mission updates. Two systems in use: TADIXS A, TADIXS B.

TAMPS Tactical Air Mission Planning System. Mission planning and route analyzer in support of power projection. Includes such capabilities as weapons loadout monitoring, radar prediction, etc.

TEAMS Tactical EA-6B Mission Support System. Provides mission planning for airborne electronic countermeasures; accepts postmission information for correlation and display. Interfaces to TAMPS.

TWCS Tomahawk Weapon Control System. TWCS is part of the Tomahawk Weapon System. Provides processing and control of targeting, engagement planning and launch control of the Tomahawk missile. To accomplish this TWCS also must keep a theater ocean surveillance data base and correlates contact reports from several systems. Interfaces to C&D on Aegis Cruisers.

Voice Various C2 systems, such as the CDS, use voice circuits to assist in the command and control of assets.

WWMCCS World Wide Military Command and Control System.

US NAVY C4I STATUS

- JMCIS core used as the baseline GCCS prototype demonstrated in JWID-94.
- First JMCIS system, integrating Navy command and control capabilities ashore and afloat, installed on the carrier *Eisenhower* in April 1994 for testing. *Eisenhower* was in the Battle Group deployed to Haiti.
- TAC-4 contract for common workstations scheduled to be awarded 1st quarter FY95.
- Navy is providing JMCIS installation support to Marine Corps and Coast Guard.

US SPECIAL OPERATIONS FORCES

- HIGH LEVEL C4I STRUCTURE
- THEATER COMMAND STRUCTURE
- COMPONENT COMMANDS
- NOMINAL C4I CONNECTIVITY
- STATUS of C4I PROGRAMS

SOF HIGH LEVEL C4I STRUCTURE

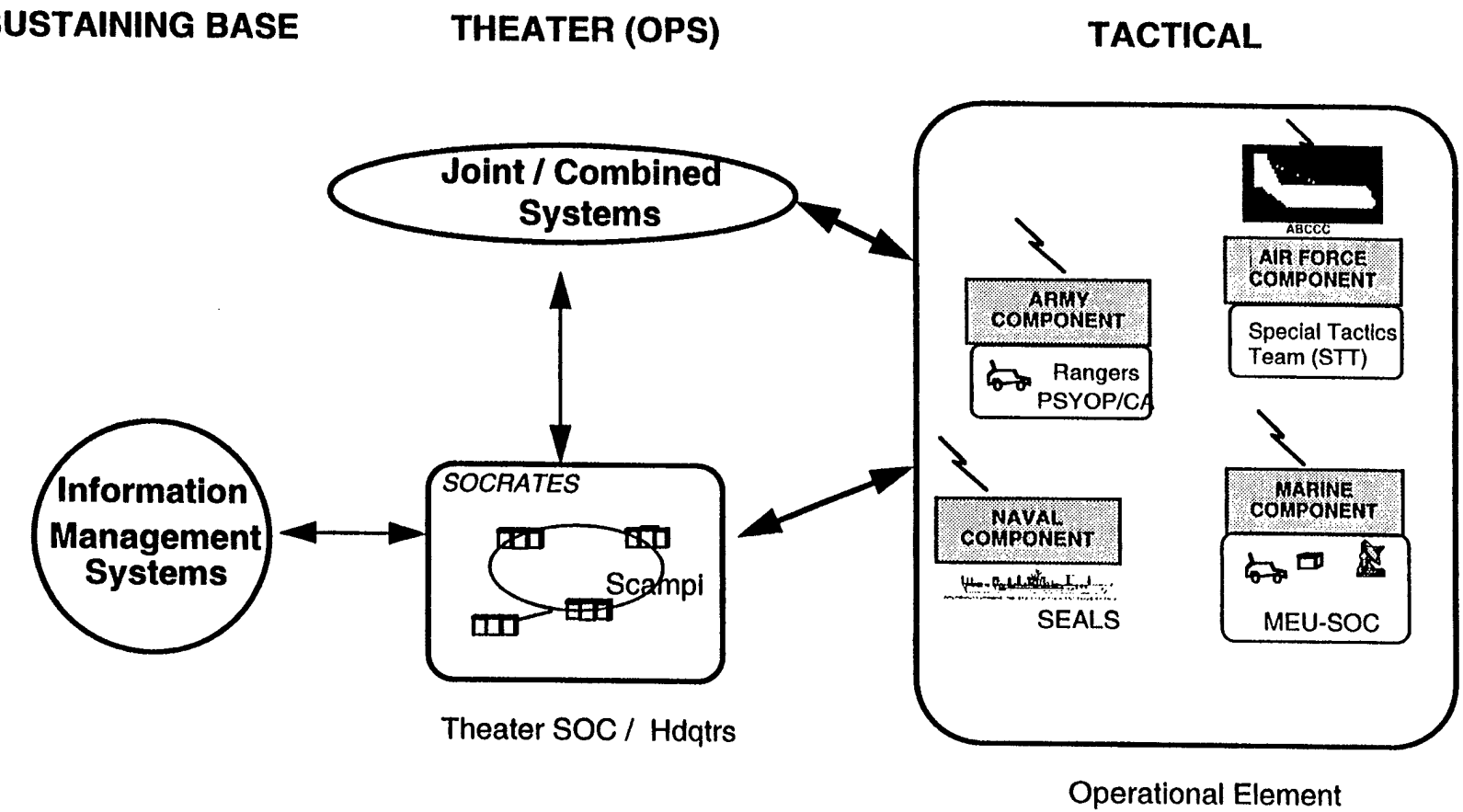

SOF HIGH LEVELC4I STRUCTURE

This drawing is a generalization of information gathered from various sources. The SOF command structure can be varied, depending upon the mission. The Operational Element refers to those units that conduct special operations, during war and during operations other than war within any theater area of responsibility. The Marine component is composed of specially trained units from the regular Marine forces.

ABCCC	Airborne Battlefield Command and Control Center. Can be used for USAFSOF functions.
MEU-SOC	Marine Expeditionary Unit - Special Operations Capable. The Marines do not have a unique Special Operations Command like the other Services, but use regular force Marines who are specially trained in special operations.
PSYOP/CA	Psychological Operations and Civil Affairs
SCAMPI	The name for a USSOCOM closed ommunity communications system for transmitting vooice, daata, imagery, and facsimile. (It is not an acronym.)
SEALs	Sea Air Land units. Navy SOF operational element.
SOCRATES	Special Operations Command, Research, Analysis, and Threat Evaluation System is USSOCOM's baseline intelligence data handling system.
SOF	Special Operations Force
STT	Special Tactics Team. Air Force SOF operational element.
USASOC	Army Special Operations Command. Located at Ft. Bragg, North Carolina.
USSOCOM	US Special Operations Command. Located at MacDill Air Force Base in Tampa, Florida.

SPECIAL OPERATIONS THEATER COMMAND STRUCTURE

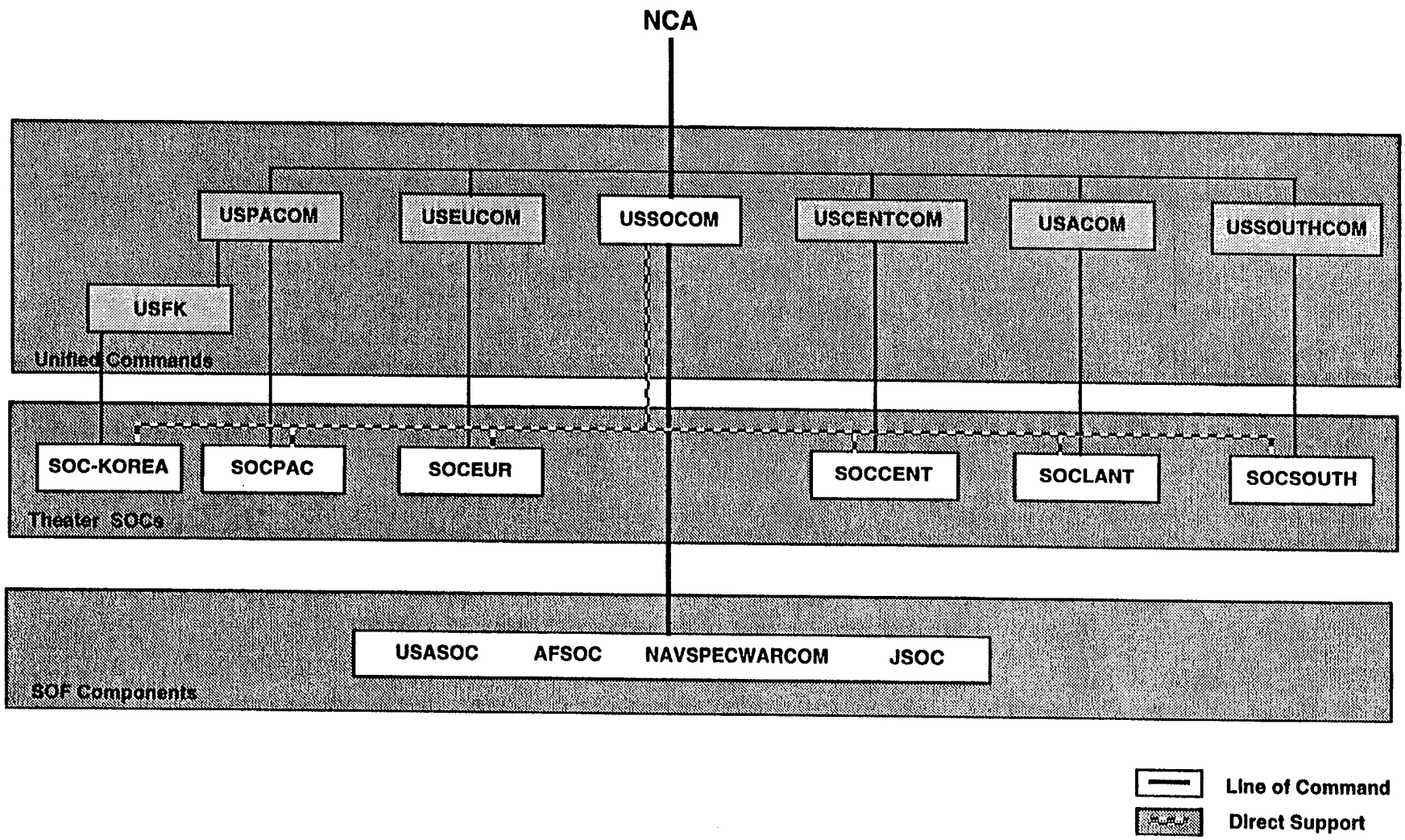

SOF THEATER COMMAND STRUCTURE

This diagram shows the command relationships between the Special Operations Forces and the Unified Commands at the theater level. Traditional missions for the theater SOCs are to plan, prepare for, and conduct special operations as directed by their respective CINCs. Theater SOCs are austerely staffed providing the routine support required by the theater CINCs, while additional manning for deployed units needed in emergency situations are handled by the SOF Unified Command.

AFSOC	Air Force Special Operations Command is the air component of USSOCOM, with commond over all USAF special operations forces.
JSOC	Joint Special Operations Command is a multi-service component of USSOCOM comprising Army, Navy, and Air Force SOF representation. Provides expertise for a standing JSOTF.
JSOTF	Joint Special Operations Task Force is a special operations organization composed of special operations forces from two or more services under a single commander.
NAVSPECWARCOM	Naval Special Warfare Command is the Navy component of USSOCOM.
NCA	National Command Authorities
SOCCENT	Special Operations Command, Central Command is collocated with USSOCOM and USCENTCOM at MacDill AFB, FL.
SOCEUR	Special Operations Command, European Command is collocated with CINCEUR in Valhingen, Germany.
SOC-Korea	Special Operations Command-Korea is the only theater where U.S. and Host nation SOF are integrated. Located neare Seoul, is a standing joint task force controlled by the Commander, U.S. Forces Korea.
SOCLANT	Special Operations Command, Atlantic Command is located at Norfolk Naval Air Station, Norfolk, VA and is the smallest of the theater SOCs.
SOCPAC	Special Operations Command, Pacific Command is located at Camp Smith, HI and has the largest area of responsibility.
SOCSOUTH	Special Operations Command, Southern Command is located at Albrook Air Force Station, Panama.
USACOM	U.S. Atlantic Command
USASOC	U.S. Army Special Operations Command operates as both a USSOCOM service component command and as an Army Major Command.
USCENTCOM	U.S. Central Command
USEUCOM	U.S. European Command
USFK	U.S. Forces Korea
USPACOM	U.S. Pacific Command
USSOCOM	U.S. Special Operations Command is one of seven DoD Unified Commands.
USSOUTHCOM	U.S. Southern Command

SPECIAL OPERATIONS COMPONENT COMMANDS

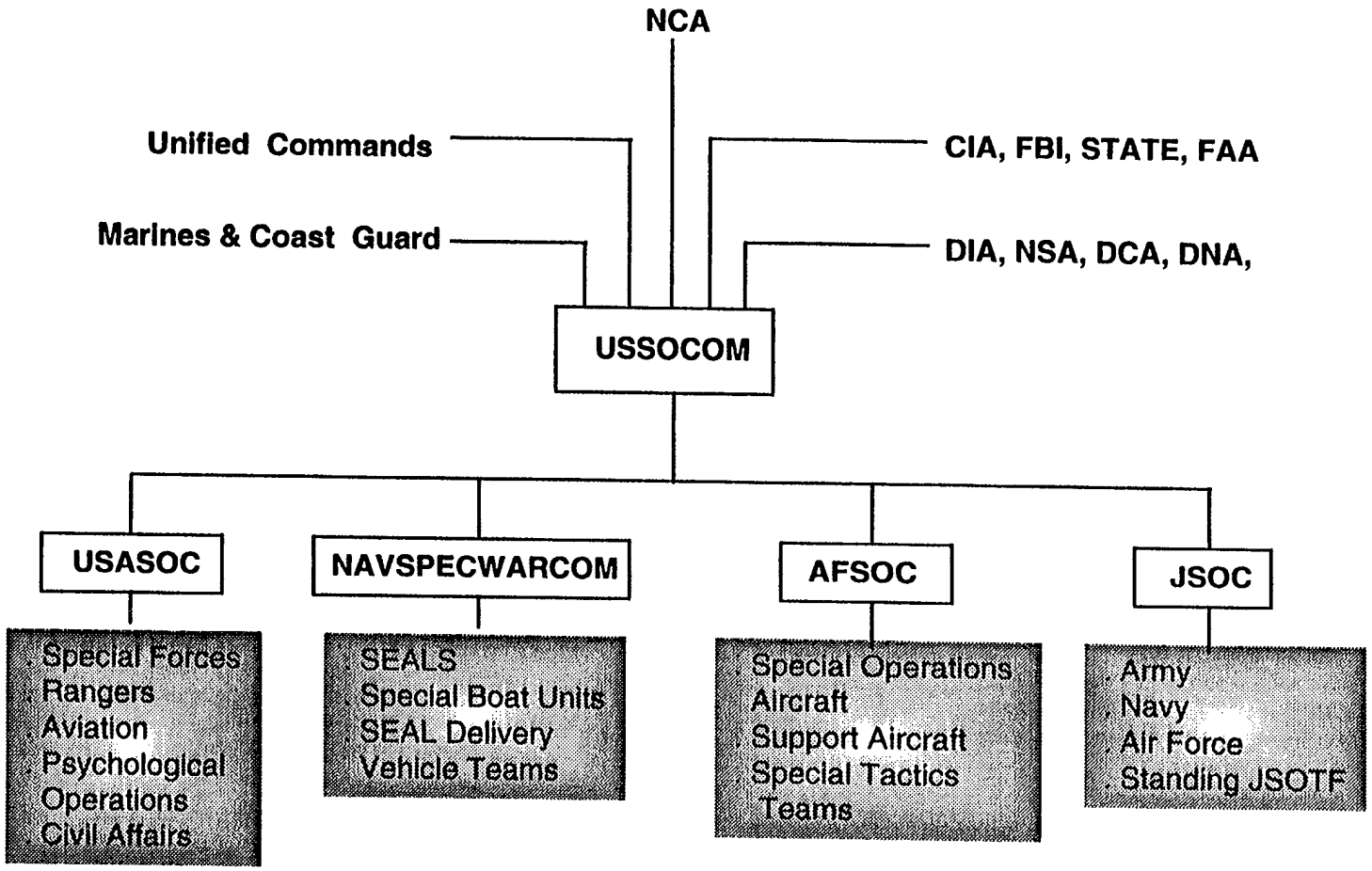

SPECIAL OPERATIONS COMPONENT COMMANDS

All CONUS-based active and reserve SOF units are assigned to USSOCOM. They are assigned to three service component commands (USASOC, NAVSPECWARCOM, and AFSOC) and one joint command (JSOC). Each SOF component command is responsible for the deployment of the operational elements listed in the shaded boxes under it.

USSOCOM performs, for its four subordinate components, a mission similar to that performed by the services for regionally oriented CINCs.

AFSOC	Air Force Special Operations Command
CIA	Central Intelligence Agency
DCA	Defense Communications Agency
DIA	Defense Intelligence Agency
FAA	Federal Aviation Administration
FBI	Federal Bureau of Investigation
JSOC	Joint Special Operations Command. Located at Fort Bragg, North Carolina.
JSOTF	Joint Special Operations Task Force is a special operations organization composed of special operations forces from two or more services under a single commander.
NAVSPECWARCOM	Naval Special Warfare Command. Headquartered at Coronado, California.
NCA	National Command Authority
NSA	National Security Agency
SEALs	Sea Air Land units
SOF	Special Operations Forces
STATE	US State Department
Unified Commands	USCINCPAC, USCINCLANT, etc.
USASOC	Army Special Operations Command. Located at Ft. Bragg, North Carolina.
USSOCOM	US Special Operations Command. Located at MacDill Air Force Base in Tampa, Florida.

Naval Command, Control and Ocean
Surveillance Center
Research Devlopment Test &
Evaluation Division

SOF NOMINAL C4I CONNECTIVITY

Command and
Control Department

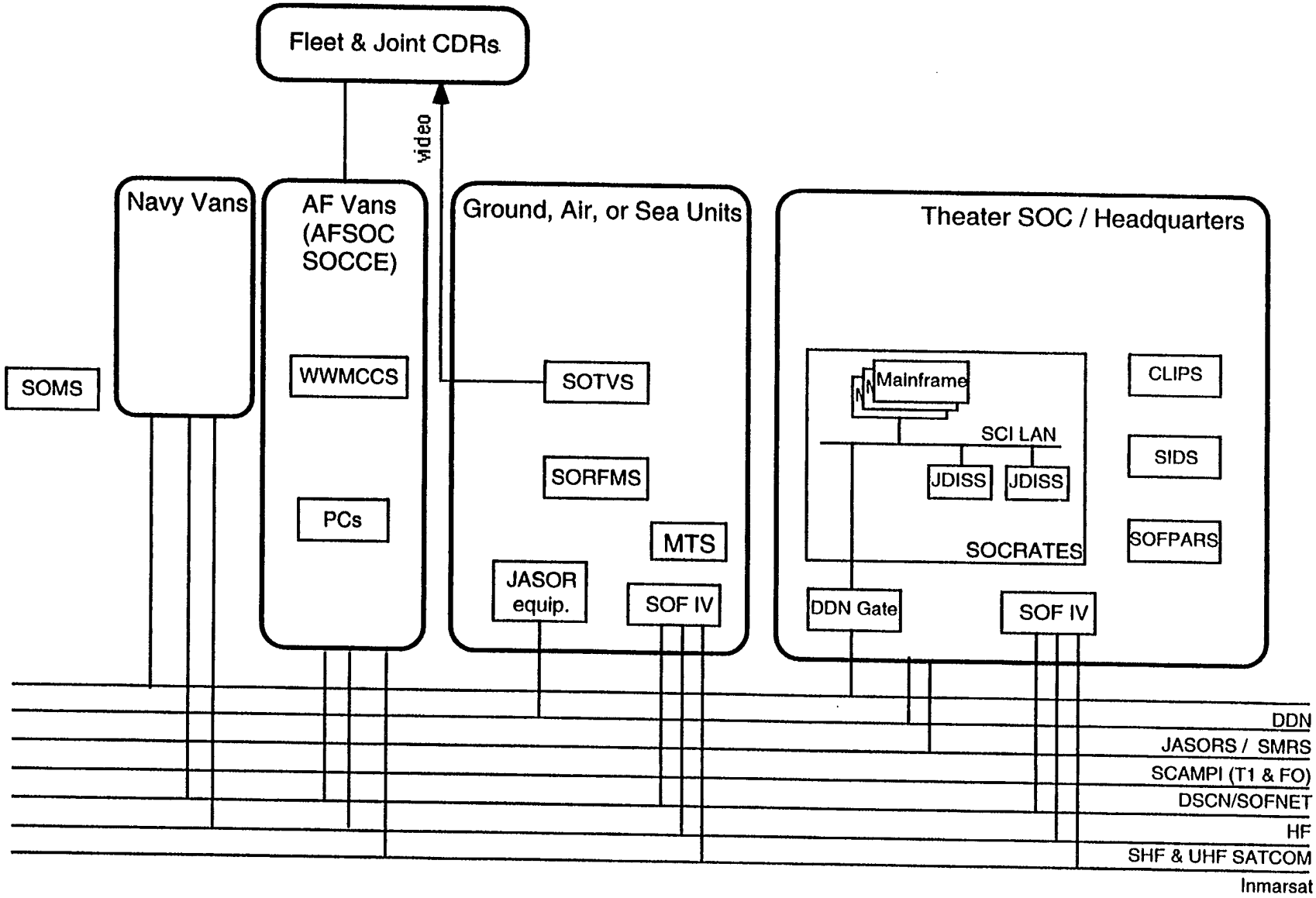

SOF NOMINAL C4I CONNECTIVITY

The above diagram depicts the nominal SOF connectivity currently or in the near future.

AF Vans A maintenance vehicle for communications, one for each AFSOC SOCCE.

AFSOC SOCCE Air Force Special Operations Command SOC Communicationss Element.

CLIPS Communications Link Interface Planning System. An artificial intelligence system to assist SOF planners in designing intra and inter service communications links.

DDN Defense Data Network. A DDN host is needed primarily for electronic mail.

DDN Gate Gateway to connect DDN to the SCI LAN at SOC HQ.

DSCN/SOFNET Distributed Secure Communications Network / Special Operations Forces Network. Provides secure data network in garrison or remote field locations. SOFNET will provide the SOF community with a secure wide area network for voice, video, and data.

FO Fiber Optic

Ground, Air, or Sea Units Any of several possible SOF team level units from any of the three services.

HF High frequency

JASOR equip. Family of radios that make up JASORS, for sea, air, and land units

JASORS Joint Advanced Special Operations Radio System. Provides ground, airborne, and seaborne operational elements with a low probability of intercept communications capability.

JDISS Joint Defense Intelligence Support Services workstation allows analysts to access SOF unique and national intelligence data bases.

INMARSAT International Maritime Satellite Organization

MTS Man-Transportable SOCRATES

Navy Vans Intelligence and communications vans to support NSWTG, or C3 vehicles for NSWTU

PCs Personal computers

SCAMPI USSOCOM C3 transmission system. A closed community of communications nodes for C3I between USSOCOM and its components and other government agencies. Uses leased fiber optic and T1 lines.

SHF & UHF SATCOM Super high frequency and ultra high frequency satellite communications

SIDS Secondary Imagery Dissemination System

SMRS Special Mission Radio System. A global SOF network replacing the JASORS program that was cancelled. Initial development will be for HF radios, HF radio base stations, and hand-held digital message entry/control devices.

SOCRATES Special Operations Command Research, Analysis and Threat Evaluation System. Provides automated intelligence and imagery support to USSOCOM and USCENTCOM, and projected for other units.

SOF IV Special Operations Forces Intelligence Vehicle

SOFPARS Special Operations Forces Planning and Rehearsal System. Computer based planning and rehearsal system for air, ground, and maritime elements.

SOMS Special Operations Media System. A series of multiband / multichannel radio and television transmitters arranged in modular configurations. Capable of broadcasting PSYOPS products to worldwide target audiences.

SORFMS Special Operations Radio Frequency Management System. A small stand-alone system for real-time, HF transmission, propagation, and forecasting.

SOTVS Special Operations Tactical Video System. Imagery system (hand-held still or camcorder.)

T1 High capacity telecommunication line

Theatre SOC/Headquarters Refers primarily to the USSOCOM at MacDill AFB, or unified command locations.

WWMCCS Worldwide Military Command Control System

US SPECIAL OPERATIONS FORCES STATUS

- The "Crashout" program is a high priority initiative for the acquistion and distribution of C2 communications equipment for theater SOCs during 1993 and 1994.
- The Joint Advanced Special Operations Radio System (JASORS), a replacement program for SOF tactical radios and base stations, was cancelled and will be replaced by the Special Mission Radio System (SMRS) to provide communications for a global SOF network. SMRS will extend the capabilities of the AN/PRC-137 HF radio system developed by the Navy.
- The first prototype of the SOF Intelligence Vehicle (IV) was introduced in early 1994 for testing. The SOF IV is a deployable van equipped with multiple means of communication to support the exchange of intelligence data to deployed SOF elements.

COMPARISONS OF SERVICES C4I SYSTEMS AND ADP EFFORTS

- C2 ADP EFFORTS BY SERVICE COMPONENT
- COMPARABLE C2 SYSTEMS

C2 ADP EFFORTS BY SERVICE COMPONENT

	ARMY	AIR FORCE	MARINE	NAVY
WORKSTATION CONTRACT	CHS-1 --> CHS-2	AFCAC --> TBM Std?	MCHS --> TAC-4	TAC-3 --> TAC-4
SOFTWARE	AWIS/CSSCS/ STACCS/CASS Core --->AGCCS ATCCS-->ABCS	AFWIS/CTAPS/ TBM Core ---> AFGCCS	MTACCS/MCASS/ UB Core ---> JMCIS	NWSS/OSS/ NTCS-A/UB Core ---> JMCIS
NOTES	Uses ruggedized HP processors and architecture CHS-2 contract awarded Sept 94 to GTE/SUN	Currently use SPARC platforms Follow-on to AFCAC expected in two years	Currently moving to SPARC MCHSA - Server MCHSB - Portable MCHSC - ArmyLCU MCHSD - Pocket	Currently use SUN-4 and HP TAC-4 contract award expected by Q1 1995

C2 ADP EFFORTS BY SERVICE COMPONENT

Each of the services have efforts for procuring new workstations and common software for migrating to the GCCS common operating environment to meet the objectives of C4IFTW.

ADP Automatic Data Processing

AFCAC Air Force Computer Acquisition Contract

AFGCCS Air Force Global Command and Control System will serve as the Air Force's link to the GCCS. It will integrate the Air Force WWMCCS Information System (AFWIS), CTAPS, and the Theater Battle Management (TBM) core software.

AGCCS Army Global Command and Control System will serve as the Army's link to the GCCS. It will integrate the Army WWMCCS Information System (AWIS), the Standard Theater Army Command and Control System (STACCS), the Combat Service Support Control System (CSSCS), and the Common Army Tactical Command & Control System (ATCCS) Support Software (CASS).

CHS Army Common Hardware Software effort.

CTAPS Contingency Theater Air Control System (TACS) Automated Planning System

GCCS Global Command and Control System will replace the Defense Department's aging Worldwide Military Command and Control System (WMCCS).

HP Hewlett Packard computer vendor

JMCIS Joint Maritime Command Information System is the Navy's link to the GCCS and will serve as the core for the initial GCCS prototype. JMCIS integrates the Navy WWMCCS Software Standardization (NWSS), Navy Tactical Command System- Afloat (NTCSA), the Operational Support System (OSS), and the Unified Build (UB) core software.

LCU Lightweight Computer Unit

MCASS Marine Common Application Support Software

MCHS Marine Common Hardware Suite

MTACCS Marine Tactical Command and Control System

TAC Tactical Advanced Computer. Fourth version of this Navy workstation buy should be available by the end of FY94.

TBM Theater Battle Management, an Air Force program.

COMPARABLE C2 SYSTEMS

FUNCTIONAL AREA	ARMY	AIR FORCE	MARINE	NAVY	SOF
GCCS Interface	AGCCS	CTAPS	MCASS	JMCIS	SOCRATES
Intelligence	ASAS	CIS	IAS	NIPS	DITDS
Air Ops (various)	FAADC2I	ADS	ATACC	TAMPS/CDS	----------
Fire Support	AFATDS	JMEM	MAFATDS	TWCS/CDS	----------
Maneuver Control	MCS	RAAP	TCO	JMCIS/CDS	----------
Logistics Support	CSSCS	LOGMOD	MCSSC2	NTCSS	
WWMCCS Interface	AWIS	STOMPS	MAGTF II	NWSS	

COMPARABLE C2 SYSTEMS

This spreadsheet attempts to show the major C2 system components developed by each of the Services to provide support for the various functional areas of C2. When GCCS replaces the existing WWMCCS system, the WWMCS interface software will be replaced by the GCCS interfaces. **The system components listed in each of the functional areas represent only the major component and in many cases are supported by many other systems not listed.**

ADS	Airspace Deconfliction System (Airspace planning; produce Airspace Control Order)
AFATDS	Advanced Field Artillery Tactical Data System
AGCCS	Army Global Command and Control System
ASAS	All Source Analysis System
ATACC	Advanced Tactical Air Command Central
AWIS	Army Worldwide Information System is the Amy's current interface to WWMCCS.
CDS	Combat Direction System. Various configurations, including Aegis C&D, ACDS, ATDS, NTDS, etc.
CIS	Combat Intelligence System(ICM+RAAP+JMEM+Sentinel Byte)
CSSCS	Combat Service Support Control System
CTAPS	Contingency Theater Automated Planning System
DITDS	Defense Intelligence Threat Data System
FAADC2I	Forward Area Air Defense Command, Control, and Intelligence
IAS	Intelligence Analysis System
ICM	Intelligence Correlation Module (Orders of Battle correlation and management)
JMCIS	Joint Maritime Command Information System (Programmatically includes NTCSS and NIPS also.)
JMEM	Joint Munitions Effectiveness Manual (Weaponeering)
LOGMOD	Logistics Module
MAFATDS	Multi-Service Advanced Field Artillery Tactical Data System
MAGTF II	A system that allows MAGTF planners to select and tailor MAGTF force structures, estimate sustainment, and estimate airlist requirements for plan feasibility analysis. It serves as the bridge between the MAGTF logistics family of systems and the Joint Operation Planning and Execution System (JOPES).
MCASS	MAGTF C4I Common Application Support Software
MCS	Maneuver Control System
MCSSC2	Marine Combat Service Support Command and Control
MDSS	MAGTF Deployment Support System
NIPS	NTCS-A Intelligence Processing Services
NTCSS	Naval Tactical Command Support System
NWSS	Navy WWMCCS Software Standardization
RAAP	Rapid Application of Air Power (Targeting)
STOMPS	Standalone Operational Message Processing System (AUTODIN access)
TAMPS	Tactical Air Mission Planning System

ACRONYMS

This appendix lists many of the acronyms used in this document, and which the reader may find useful while reading other C4I literature.

2W/4W	Two- or four- wire local telecommunications
5D Server	Demand Driven Direct Digital Dissemination; imagery system.
ABCCC	Airborne Battlefield Command and Control Center. This key airborne center is highly connected to other Air Component elements, though it has no sensing capabilities of its own. Houses tactical displays and extensive communications capabilities. Allows for airspace management of wider scope than FACP. Can be used for USAFSOF functions.
ABCS	Army Battle Command System; ATCCS is transitioning into ABCS.
ACE	(1) Allied Command Europe (2) Aviation Combat Element. Ranges in size from a helo squadron to one or more aircraft wings; it may include offensive air support, assault support, anti-air warfare, electronic warfare, and C2 organizations
ACUS	Area Common User System is a collection of Mobile Subscriber Equipment (MSE) that provides voice and data communications for Army Corps and their divisions, capable of handling 5 division corps in an area of 37,000 square kilometers.
ADDS	Army Data Distribution System is a family of secure, jam-resistant, near real-time, data communications, and position location reporting, navigation, and identification systems. It provides a near real-time data comm capability to echelon above corps as well as below. It includes EPLRS and JTIDS.
ADP	Automatic Data Processing
ADS	Airspace Deconfliction System (Airspace planning; produce Airspace Control Order)
AFAC	Airborne Forward Air Controller. Manages close air support, controls attacks, and assesses damage.
AFATDS	Advanced Field Artillery Tactical Data System. Provides automated fire support of close, rear and deep operations. It is composed of a common suite of hardware and software employed in varying configurations at different operational facilities interconnected by tactical communications. Provides support at any level of command.

AFCAC	Air Force Computer Acquisition Contract
AFGCCS	Air Force Global Command and Control System will serve as the Air Forces link to the GCCS. It will integrate the Air Force WWMCCS Information System (AFWIS), CTAPS, and the Theater Battle Management (TBM) core software.
AFLANT	US Air Force, Atlantic. Synonymous with parts of the Air Combat Command (ACC) at Langley AFB.
AFMSS	Air Force Mission Support System (Aircrew mission planning used at squadron level)
AFORMS	Air Force Operational Resource Management System
AFSOC	Air Force Special Operations Command is the air component of USSOCOM, with commond over all USAF special operations forces.
AFSOC SOCCE	Air Force Special Operations Command SOC Communications Element
AF Vans	A maintenance vehicle for communications, one for each AFSOC SOCCE.
AGCCS	Army Global Command and Control System will serve as the Army's link to the GCCS. Merges the strategic and theater components of the Army as an initial step in the migration to the Army Battle Command System. It will integrate the Army WWMCCS Information System (AWIS), the Standard Theater Army Command and Control System (STACCS), the Combat Service Support Control System (CSSCS), and the Common Army Tactical Command & Control System (ATCCS) Support Software (CASS).
AIC	Atlantic Intelligence Center
AIC LAN	AIC network at the secret level; one of many AIC networks.
AIS LAN	Administrative data system network at PACFLT
ALCC	Air Lift Control Center
ALCES	Air Lift Control Element
ALCOM	Alaskan Command
AMHS	Automated Message Handling System
AN/PRC-77	A radio in the CNR family. Replaced by SINCGARS.
AN/VRC-12	A small unit radio in the CNR family. Replaced by SINCGARS.
AOC	Air Operations Center. Command center for the commander of the air component. From where daily Air Tasking Orders (ATOs) are generated.
APS	Advanced Planning System (ATO planning)
ARLANT	US Army Atlantic. Synonymous with FORSCOM. Located in Georgia.

ARM	Air Request Manager
ARPAC	US Army, Pacific
ASAS	All Source Analysis System. Automated tactical intelligence system for Corps, Division, and Echelon Above Corps. Provides all source intelligence fusion network used to generate understanding of enemy deployments, capabilities, vulnerabilities, and potential courses of action. Procurement divided into three blocks. Block II will include conversion to Army Common Hardware/Software and will reach milestone III in 1999.
ASOC	Air Support Operations Center. Air Force unit collocates with Army ground based mobile shelters. Provides control of Army units, manages TACPs, and coordinates with Army operations.
ASW(M or CS)	Anti-Submarine Warfare Module (for carriers) or Anti-Submarine Warfare Combat System (for other combatants.) Supports the Anti-Submarine warfare mission of the ship. Includes mission planning, tactical situation monitoring, and data correlation. ASWCS also provides weapons (e.g., torpedo) control.
ASWOC	Anti-submarine Warfare Operations Center
ATACC	Advanced Tactical Air Command Central provides the tactical air commander with the decision aids needed to support planning and directing of overall air support.
ATACS	Army Tactical Area Communications System, which is the existing component ACUS. Eventually superseded by MSE.
ATCCS	Army Tactical Command and Control System; it is part of the Army Command and Control System (ACCS) concerned primarily with employment. It will soon be called the Army Battle Command System (ABCS).
ATEAMS	Advanced TEAMS
AUTODIN	Automatic Digital Network
AWACS	Airborne Warning and Control System (E3-A). Wide area air surveillance and control of defense, including airspace management. Can cue interceptors on air targets. Some AWACS have been modified to detect ocean surface targets to support maritime surveillance missions.
AWDS	Automated Weather Dissemination System
AWIS	Army Worldwide Information System. The Army element of WWMCCS. It will be overtaken by the Army GCCS (a migration of AWIS, STACCS, and CSSCS-EAC into one system).
Battle Group	Basic unit of a Naval force. Traditionally composed of one CV, several combatants, and support.
BCS	Battery Computer System

BDS	Briefing Display System
BRCS	Base Recovery after attack Comm System
C2IPS	Command and Control Information Processing System; used from AOC down to wing level.
CAFMS	Computer Assisted Force Management System (ATO management)
CAFWSP	Combat Air Forces Weather Software Package; a CTAPS integated application to provide both current and forecast weather in support of target nomination, ATO planning, and execution.
CAG	Civil Affairs Group
CAMS	Consolidated Aircraft Maintenance System
CAOC	Combined Air Operations Center
CARS/JSIPS	Contingency Airborne Reconnaissance System. Provides SIGINT, imagery, and target data. Also referred to (in future architectures) as the Joint Services Imagery Processing System (JSIPS).
CAS-B	Combat Ammunition System - Base
CASES	Capabilities Assesment, Simulation, and Evaluation System
CATF	Commander, Amphibious Task Force
CATIS	Computer Aided Tactical Information System
CCC	CINC Command Center is the shore command center for each theater of operations.
CDS	Combat Direction System. Used here generically for several different systems: Advanced Combat Direction System (carriers), Aegis Command & Decision (cruisers and some destroyers), and older TDSs (Tactical Data Systems) still found on certain ships. Integrates ownship sensor data and tactical data link information, provides real-time situation monitoring, and performs threat evaluation and weapon assignments.
CE	Command Element. Provides single headquarters for command and coordination of ground, air, and combat service support.
CEC	Cooperative Engagement Capability
CFC	Combined Forces Command
CG	(1) Guided Missile Cruiser
	(2) Coast Guard
CHS	Army Common Hardware Software effort.

CHS2	Common Hardware Software 2. The standard computing resources provided for ATCCS component systems. CHS2 will be first available in FY95.
CIA	Central Intelligence Agency
CIC	Combat Intelligence Center (Marines)
CIDSS	COMPACAF Integrated Decision Support System. The umbrella engineering effort coordinating the support systems at PACAF.
CIECS LAN	CINCLANTFLT Internetwork Electronic Communication System
CINC	Commander in Chief
CINCCENT	Commander in Chief, Central Command
CINCLANTFLT	Commander in Chief, Atlantic Fleet
CINCPACFLT	Commander in Chief, Pacific Fleet
CINCS WAN	Connects CINCPACFLT, CINCLANTFLT, and CNO with video and admin support.
CINCUSNAVEUR	Commander In Chief, US Navy Europe. The 6th fleet is stationed in the Mediterranean.
CIS	Combat Intelligence System (ICM+RAAP+JMEM+Sentinel Byte); used at AOC down to squadron.
CJTF	Commander, Joint Task Force
CJTF-4	Commander, Joint Task Force 4 (a standing JTF).
CLF	Commander of the Landing Force in amphibious warfare
CLIPS	Communications Link Interface Planning System. An artificial intelligence system to assist SOF planners in designing intra and inter service communications links.
CMD CTR	Command Center
CMSA/TMPC	Cruise Missile Support Activity and Theatre Mission Planning Center
CNN	Cable News Network
CNR	Combat Net Radio is a family of radios that provide for C2 from squad up through corps; mainly voice, there is limited data capability, and it will completely replace current single channel radios by 1995. CNR consists of five types of units, including SINCGARS and IHFR.
COC	Combat Operations Center
COMMINEWARCOM	Commander, Mine Warfare Command

COMMZ	Communications Zone; rear part of theater of operations (behind but continuous with the CZ) that contains the lines of communications, supply, and evacuation, and other agencies for support and maintenance.
CP	Command Post
CP LAN	Command Post Local Area Network
CRC	Control & Reporting Center
CRP	Control & Reporting Post
CSP	Communication Support Processor
CSSCS	Combat Service Support Control System. Provides automated support to control of Army CSS, allowing state of readiness to be assessed and courses of action to be war-gamed based upon CSS status.
CSSCS-EAC	Combat Service Support Control System for Echelons Above Corps
CSSE	Combat Service Support Element is tailored to provide logistics support, including supply, maintenance, engineering, etc., services.
CSSOC	Combat Service Support Operations Center. The CSSOC shown is for the Force Service Support Group Headquarters.
CTAPS	Contingency Theater Air Control System (TACS) Automated Planning System. Automates the Air Force Air Control System. The CTAPS architecture is based on an evolutionary development and procurement philosophy making maximum use of commercial hardware and software technology.
CUS	Commander Undersea Surveillance (Formed from integration of CUSP and CUSL. With the disestablishment of COMUNDERSEASURVPAC, effective Sept. 30, 1994, CUSL in the Atlantic administratively became the single Undersea Surveillance Command. Operational control for CUSP remains with the Commander, ASW Force, US Pacific Fleet, and CINC, US. Atlantic Fleet, respectively.)
CV	Aircraft Carrier
CZ	Combat Zone; that area required by combat forces for the conduct of operations (Army).
DAMPS	Desktop Automated Message Processing System. PACFLT is modernizing its networking and message handling, and as of the date of this document, the diagram shown above is one possible configuration.
DART	Dynamic Analysis and Replanning Tool
DASC	Direct Air Support Center. An expandable 8x8x20 shelter used to coordinate close air support, assault support, and air recon. Current DASC replaced by an improved version (IDASC) with IOC of 93.

DCA	Defense Communications Agency
DDG	Guided Missile Destroyer
DDN	Defense Data Network
DDN Gate	Gateway to connect to the DDN
DIA	Defense Intelligence Agency
DITDS	Defense Intelligence Threat Data System
DSCN/SOFNET	Distributed Secure Communications Network/Special Operations Forces Network. Provides secure data network in garrison or remote field locations. SOFNET will provide the SOF community with a secure wide area network for voice, video, and data.
DSN	Defense Switched Network
DSNET	Defense Secure Network. DSNET 1 is the secret segement, while DSNET 3 is the SCI segment.
EAC	Echelon Above Corps (Army command level)
EDSS	EUCOM Decision Support System; a collection of C2 systems based around UCCS that is used by EUCOM commanders.
EPLRS	Enhanced Position Location Reporting System. Army's version of the Marines' PLRS system. Provides secure jam-resistant near real-time data communications support for ATCCS. It is a time division multiple access system using frequency hopping spread spectrum waveform in UHF. Additionally provides position location and reporting to users and their headquarters (if equipped). IOC is 1997.
ETCC	European Theater Command Center; the command center complex for USEUCOM. Currently being remodeled and will soon be operational.
EUCOM SAN	European Command Secret Area Network
FAA	Federal Aviation Administration
FAADC3I	Forward Area Air Defense Command, Control, Communications, and Intelligence. Integrates, processes, and distributes aerial target information gathered from ground based and other sensors, Identifications Friend or Foe, Positive Hostile Identification, and Non-cooperative Target Recognition devices. It will interoperate with joint and allied High-to-Medium Altitude Air Defense C2 systems.
FACP	Forward Air Controller Post. Provides air surveillance and manages local air space.
FBI	Federal Bureau of Investigation

FCC	Fleet Command Center
FCTC	Fleet Combat Training Center
FDC	Fire Direction Center
FIIU	Force Imagery Interpretation Unit
FIST	Fleet Imagery Support Terminal
FMOCC	Fleet Mobile Operations Command Center. Now also called the Joint Mobile Operations Command Center (JMOCC).
FO	Fiber Optic
FOSIF	Fleet Ocean Surveillance Information Facility
FRG	Federal Republic of Germany
FSCC	Fire Support Coordination Center
FSSG	Force Service Support Group
FULCRUM	Not an acronym - a mapping system
GateGuard	Message processor
GCCS	Global Command and Control System is the C2 system for Joint Services. It will replace the Defense Department's aging Worldwide Military Command and Control System (WMCCS).
GCE	Ground Combat Element. Ranges in size from an infantry battalion to one or more divisions. May include artillery, tank, etc. orgs.
GFCP	General-purpose Front-end Communications Processor. Japan TCCS networking can be extended to Japan for USFJ.
HF	High Frequency
HFR	High Frequency Radios (now Improved HFR) a component of CNR
HQ	Headquarters
IAS	Intelligence Analysis System
IAS W/S	IAS Workstation version
ICM	Intelligence Correlation Module (Orders of Battle correlation and management)

IDASC	Improved Direct Air Support Central
IDEX	Imagery Digital Exploitation
IHFR	Improved High Frequency Radio
IMOM	Improved Many-On-Many (EC analysis)
INMARSAT	International Maritime Satellite Organization
J1, J2, J3, J6	Staff components of a unified command
JASMIN	Joint Analysis System for Military Intelligence
JASORS	Joint Advanced Special Operations Radio System. Provides ground, airborne, and seaborne operational elements with a low probability of intercept communications capability.
JDISS	Joint Defense Intelligence Support System; allows analysts to access national intelligence data bases.
JDISS-E	Joint Deployable Intelligence Support System - Europe. EUCOM unique version of JDISS. JDISS-E also known as EISS.
JFACC	Joint Force Air Component Commander
JFACC HQ	Joint Force Air Component Commander Headquarters
JFAST	Joint Flow and Analysis System for Transportation
JFROM	Joint Force Reception and Onward Movement
JIC	Joint Intelligence Center (for PACOM)
JMCIS	Joint Maritime Command Information System is the Navy's evolutionary command and control system, one of the candidate C2 systems being considered as the basis for the Global Command and Control System planned for joint use. (Programmatically includes NTCSS and NIPS also.) JMCIS integrates the Navy WWMCCS Software Standardization (NWSS), Navy Tactical Command System- Afloat (NTCSA), the Operational Support System (OSS), and the Unified Build (UB) core software.
JMEM	Joint Munitions Effectiveness Manual (Weaponeering)
JOC	Joint Operations Center (ACOM)
JOC LAN	The major network in the JOC connecting OSS, JOTS, GCCS, and other systems
JOTS	Joint Operational Tactical System; absorbed by JMCIS
JSOC	Joint Special Operations Command is a multi-service component of USSOCOM comprising Army, Navy, and Air Force SOF representation. Provides expertise for a standing JSOTF.

JSOTF	Joint Special Operations Task Force is a special operations organization composed of special operations forces from two or more services under a single commander.
JSTARS	Joint Surveillance Target Attack Radar System (E-8). Provides target location updates of ground vehicles, to the Army, using a synthetic aperture radar (SAR). Also has capability to conduct onboard analysis and display of SAR images to support near real-time target detection, identification, and reporting to attack aircraft within line of sight of JSTARS.
JTF	Joint Task Force
JTF-5	A standing joint task force (for interdiction, etc.)
JTIDS	Joint Tactical Information Distribution System that supports TADIL-J
JVIDS	Joint Visually Integrated Display System
LAAD	Low Altitude Air Defense
LAAM	Light AntiAircraft Missile
LAN	Local Area Network
Landline	2W or 4W data and voice
LATIN	LANTCOM Theater Intelligence Network
LCU	Lightweight Computer Unit
LDMX	Local Digital Message eXchange
LHx	Amphibious ships (LHD or LHA), the principal C2 platform for amphibious operations
LIMS	LANTCOM Internetted Message System
LINK 11	Tactical data link, mostly for targets and training.
LINK 14	Tactical data link, primarily for air traffic.
LOCE	Linked Operations/Intelligence Centers Europe
LOGMOD	Logistics Module
LOGSAFE	Logistics Sustainability Analysis and Feasibility Estimator
MACG	Marine Air Control Group
MAFATDS	Multi-Service Advanced Field Artillery Tactical Data Systme

MAG	Marine Aircraft Group
MAGTF	Marine Air-Ground Task Force. Combined armed forces consisting of ground, air, and combat service support forces, under the direction and control of a single commander. It is the overall conceptual framework for forming forces for combat operations.
MAGTF II	A system that allows MAGTF planners to select and tailor MAGTF force structures, estimate sustainment, and estimate airlist requirements for plan feasibility analysis. It serves as the bridge between the MAGTF logisitics family of systems and the Joint Operation Planning and Execution System (JOPES).
MAOC	Mobile Air Operations Center. (The AOC may be integrated with the Navy sytems on a carrier.)
MARFOREUR	Marine Forces Europe. A new name for FMFEUR; very limited resources in Europe.
MARFORLANT	Marine Forces, Atlantic. Headquarters has moved to Camp LeJeune, with liaison in Norfolk.
MARFORPAC	Marine Forces, Pacific
MATRIX	Multi-source Automated Target Recognition with Interactive Exploitation
MAXI	Modular Architecture for the eXchange of Intelligence
MCASS	Marine Common Application Support Software
MCHS	Marine Common Hardware Suite
MCS	Maneuver Control System. Supports operations planning and control for any part of the Corps and below Army Command and Control System. Provides information on own forces, enemy forces, and battlefield characteristics to commander and staff. Displays data generated within air/land combat environment. MCS will transition to common hardware/software in 1994 and Final Operational Capability (FOC) will be 1995.
MCSSC2	Marine Combat Service Support Command and Control
MDSS	MAGTF Deployment Support System
MDSS II	MAGTF Deployment Support System II enables Commanders at various echelons of a MAGTF to build and maintain a data base that contains force and equipment data reflecting how a MAGTF is configured for deployment.
MDT	Message Distribution Terminal
MEB	Marine Expeditionary Brigade. An assault echelon embarked aboard approximately 20 amphibious ships. CE commanded by a Brigadier General.

MEF	Marine Expeditionary Force. Active Marine forces are organized into three MEFs, one in the Atlantic Command and two in the Pacific Command. Largest and most powerful of MAGTFs, the CE is commanded by a Major General or Lieutenant General.
MEU	Marine Expeditionary Unit. Smallest air-ground task force, embarked aboard 3-5 amphibious ships, CE commanded by a Col.
MEU-SOC	Marine Expeditionary Unit - Special Operations Capable. The Marines do not have a unique Special Operations Command like the other Services, but use regular force Marines who are specially trained in special operations.
MIIDS IDB	Military Intelligence Integrated Data System/Intgrated Data Base mainframe computer.
MIPS	MAGTF Integrated Personnel System
MSE	Mobile Subscriber Equipment. The new ACUS equipment that will allow for circuit switch or packet switch subscribers. Provides means for communicating in both division and corps areas of operation.
MT WHITNEY	Second Fleet command ship
MTACCS	Marine Tactical Command and Control System
MTS	Man-Transportable SOCRATES
M W	MicroWave (Line of Sight LOS)
MWSG	Marine Wing Support Group
MWSS	Marine Wing Support Squadron
NAF	Numbered Air Forces
NAVMACS	Navy Modular Automated Communications System
NAVMACS II	Navy Modular Automated Communications System, II.
NAVSPACECOM	Naval Space Command
NAVSPECWARCOM	Naval Special Warfare Command; the Navy component of SOCOM.
NCA	National Command Authority
NCC	Network Control Center, for the STACCS WAN
NCTAMS	Naval Computer and Telecommunications Area Master Station
NDS	National Photographic Interpretation Center Data System
NEF	Naval Expeditionary Force

NET BUILDER	A router between networks
NIPS	NTCS-A Intelligence Processing Services
NMCC	National Military Command Center
NOPF	Naval Oceanographic Processing Facility
NSA	National Security Agency
NSWC	Naval Special Warfare Command
NSWG2	Naval Special Warfare Group, 2
NTCS-A	Navy Tactical Command System Afloat. Integrates contact and threat warning data from external sources with data from the afloat sources and sensors. Supports tactical planning and direction of a battle group electronic warfare assets and C3 countermeasures assets. Supports general battle management functions of senior commanders. Integrated into JMCIS.
NTCSS	Naval Tactical Command Support System
NWIS	(improper acronym; see NWSS)
NWOC	Naval Western Oceanographic Center. Located at Pearl Harbor. There is an Eastern Center located at Norfolk.
NWSS	Navy WWMCCS Standardization System. Navy used this system to interface to the Joint WWMCCS system; this functionality is being integrated into JMCIS.
OBU/OED	Ocean Surveillance Information System (OSIS) Baseline Upgrade/OSIS Evolutionary Development
OC	Operations Center
OCAC	Operations Control and Analysis Center
OPTEVFOR	Operations Test and Evaluation Force; Navy command that tests and evaluates readiness.
OSCC	Operational Systems Control Cemter
OSS	Operations Support System was the shore based command and control sytem used to support Fleet Command Centers; integrated into JMCIS.
OTCIXS	Officer in Tactical Command Information eXchange Subsystem
PACAF	US Air Forces, Pacific
PACOM	Pacific Command

PC	Personal Computer
PC LIMS	Personal Computer on LIMS
PLRS	Position Location Reporting System
PSYOP/CA	Psychological Operations and Civil Affairs
RAAP	Rapid Application of Air Power (Targeting)
RAOC	Rear Area Operations Center
RAWS	Relocatable Army Processors for Intelligence Data - Europe Analyst Workstation
RECON	Reconnaissance
Reuters	International news service
Rivet Joint	Reconnaissance aircraft designated E-135. Receives and processes long range SIGINT in support of ELINT and COMINT missions. Capability to display and analyze data, including identification, location, and parametric. Supports updating potential threat electronic order of battle (EOOB), analyses of theaters current electronic signatures, and provides indications and warnings of threat activity.
ROK PRES/MOD	Republic of Korea President or Minister of Defense; analagous to our NCA.
ROK-US MILCOM	Republic of Korea - United States Military Committee.
RRC	Regional Reporting Center
SACLANT	Supreme Allied Command, Atlantic
SARC	Surveillance & Reconnaissance Center
SATCOM	Satellite communications
SCAMPI	USSOCOM C3 transmission system (It is not an acronym.) A closed community of communications nodes for C3I between USSOCOM and its components and other government agencies. Uses leased fiber optic and T1 lines.
SCCIS	SOCEUR Command and Control Information System
SEALs	Sea Air Land units. Navy SOF operational element.
SHF	Super High Frequency
SIDS	Secondary Imagery Dissemination System

SINCGARS	Single Channel Ground and Airborne Radio System. A family of VHF combat net radios that provides the primary means of command and control for Infantry, Armor, and Artillery units.
SMRS	Special Mission Radio System. A global SOF network replacing the JASORS program that was cancelled. Initial development will be for HF radios, HF radio base stations, and hand held digital message entry/control devices.
SMTP Gateway	Simple Mail Transfer Protocol Gateway; computer that allows for receipt of e-mail from outside systems.
SOC-Korea	Special Operations Command-Korea is the only theater where U.S. and Host nation SOF are integrated. Located near Seoul, it is a standing joint task force controlled by the Commander, U.S. Forces Korea
SOCC	Submarine Operations Command Center
SOCCENT	Special Operations Command, Central Command is collocated with USSOCOM and USCENTCOM at MacDill AFB, FL.
SOCEUR	Special Operations Command Europe. SOCEUR is unique in that it is a component and a staff element. SOCEUR is larger than SOCPAC or SOCLANT.
SOCLANT	Special Operations Command, Atlantic Command; located at Norfolk Naval Air Station, Norfolk, VA, it is the smallest of the theater SOCs.
SOCOM	Special Operations Command is one of the DoD Unified Commands.
SOCPAC	Special Operations Command, Pacific Command; located at Camp Smith, HI and it has the largest area of responsibility.
SOCRATES	Special Operations Command Research, Analysis and Threat Evaluation System. Provides automated intelligence and imagery support to USSOCOM and USCENTCOM, and projected for other units.
SOCSOUTH	Special Operations Command, Southern Command is located at Albrook Air Force Station, Panama.
SOF	Special Operations Forces
SOF IV	Special Operations Forces Intelligence Vehicle
SOFPARS	Special Operations Forces Planning and Rehearsal System. Computer based planning and rehearsal system for air, ground, and maritime elements.
SOMS	Special Operations Media System. A series of multiband/multichannel radio and television transmitters arranged in modular configurations. Capable of broadcasting PSYOPS products to worldwide target audiences.
SORFMS	Special Operations Radio Frequency Management System. A small stand alone system for real-time, HF transmission, propagation, and forecasting.

SOTVS	Special Operations Tactical Video System. Imagery system (hand held still or camcorder).
SRIG	Surveillance, Reconnaissance & Intelligence Group
SSBN	Ballistic Missile Nuclear Powered Submarine
SSN	Attack Submarine (Nuclear Powered)
STACCS	Standard Theater Army Command Control System. The theater level data processing support system initially developed by the Army European Command. Being integrated into AGCCS.
STATE	US State Department
STOMPS	Standalone Operational Message Processing System (AUTODIN access)
STT	Special Tactics Team. Air Force SOF operational element.
STUIII + HNTELE	Secure Telephone Unit III working in conjunction with a Host Nation Telephone system. The STU-III is a low cost wide band, two-wire secure telephone with up to 9600-baud data-rate capabilities.
SUBLANT	Submarine Forces, Atlantic
SURFLANT	Surface Fleet, Atlantic
T1	High capacity telecommunication line
TAC	(1) Tactical Advanced Computer. Fourth version of this Navy workstation buy should be available by the end of FY94. (2) Tactical Command Post
TACC	Tactical Air Command Center. Provides the tactical air commander with communications, system processing, data correlation and displays needed to support planning and directing of overall air support. The systems and components that make up the TACC will be replaced by the Advanced TACC (ATACC) beginning in FY95.
TAC COMMS	Tactical Communications
TACP	Tactical Air Control Party. Mobile ground controller for air support for Army. Subordinate to ASOC.
TACS	Theater Air Control System
TADIL	Tactical Digital Information Links. Bit oriented real-time information distribution for real-time command and control. The USN has: Link 4A (air control, maps to TADIL C standard), Link 11 (track data and force orders, TADIL A standard), and Link 16 (jam resistant track data and

force orders, TADIL J standard). Both TADIL A and TADIL J provide for multiservice exchange of information.

TADIXS Tactical Data Information Exchange Systems. Character oriented messages system for command and control information, such as cruise missile mission updates. Two systems in use: TADIXS A, TADIXS B.

TAMPS Tactical Air Mission Planning System. Mission planning and route analyzer in support of power projection. Includes such capabilities as weapons loadout monitoring, radar prediction, etc.

TAOC Tactical Air Operations Center (Marines) is used for exercising command and control of air operations.

TAOM Tactical Air Operations Module; manages the air traffic control, providing real-time C2 of all MAGTF air and surface-to-air missile assets.

TARGET Theater-level Analysis, Replanning and Global Execution Toolbox

TBM Theater Battle Management; Air Force's unifying C4I concept

TCAC Technical Control and Analysis Center

TCCS Theater Command and Control System. The major C2 system supporting PACOM and staff, and in use at all the components. Network extended off of Hawaii.

TCO Tactical Combat Operations is the focal point of the MAGTF C2 network. Provides commander, staff, and subordinates automation to receive, fuse, display, and disseminate C2 information, for both planning and direction.

TEAMS Tactical EA-6B Mission Support System. Provides mission planning for airborne electronic countermeasures; accepts postmission information for correlation and display. Interfaces to TAMPS.

TENOC Theater Network Operations Center

TOC Tactical Operations Center (Army)

TPC Target Planning Center

TPCS Team Portable COMINT System

TRE Tactical Receive Equipment

TSC Tactical Support Center (The former AntiSubmarine Warfare Operations Center)

TWCS Tomahawk Weapon Control System. TWCS is part of the Tomahawk Weapon System. Provides processing and control of targeting, engagement planning and launch control of the Tomahawk missile. To accomplish this TWCS also must keep a theater ocean surveillance data base and correlates contact reports from several systems. Interfaces to C&D on Aegis Cruisers.

U2-R	Reconnaissance aircraft. Collects intelligence data processed by the CARS/JSIPS system.
UCCS	European Command and Control System. This is the major planning and analysis support system for the EUCOM staffs.
UHF	Ultra-High Frequency
USA	United States Army
USACOM	US Atlantic Command
USAF	United States Air Force
USAFE	US Air Forces Europe. Three Numbered Air Forces are stationed in Europe.
USAFSOF, USNSOF, USASOF	Special Operation Forces of the services
USAREUR	US Army Europe. The Army has extensive forces in Europe, and thus significant C2, which directly impacts the C2 of USECOM.
USASOC	U.S. Army Special Operations Command operates as both a USSOCOM service component command and as an Army Major Command.
USCENTCOM	US Central Command
USCINC	United States Commander in Chief
USEUCOM	US European Command
USFJ	US Forces, Japan
USFK	US Forces, Korea
USN	United States Navy
USPACOM	US Pacific Command
USSOCOM	US Special Operations Command. Located at MacDill Air Force Base in Tampa, Florida.
USSOUTHCOM	US Southern Command
VHF	Very High Frequency
VIX	Video Information Exchange System
VTC	Video Teleconferencing; there exists a video conferencing capablity between ACC and CINUSACOM; the capability is being expanded to the other components.

W/S	WorkStation
WARRIOR	An Army intelligence system (not an acronym)
WCCS	Wing Command and Control System provides decision support to Air Force wings at the unit level.
WIN	WWMCCS Interconnection Network
WOC	Wing Operations Center. The implementor of ATOs, Force readiness, detailed mission planning, execution of orders, and reporting of status.
WWMCCS	World Wide Military Command and Control System is the current joint command and control system to be replaced by the Global Command and Control System (GCCS).

REPORT DOCUMENTATION PAGE

Form Approved
OMB No. 0704-0188

Public reporting burden for this collection of information is estimated to average 1 hour per response, including the time for reviewing instructions, searching existing data sources, gathering and maintaining the data needed, and completing and reviewing the collection of information. Send comments regarding this burden estimate or any other aspect of this collection of information, including suggestions for reducing this burden, to Washington Headquarters Services, Directorate for Information Operations and Reports, 1215 Jefferson Davis Highway, Suite 1204, Arlington, VA 22202-4302, and to the Office of Management and Budget, Paperwork Reduction Project (0704-0188), Washington, DC 20503.

1. AGENCY USE ONLY *(Leave blank)*	2. REPORT DATE	3. REPORT TYPE AND DATES COVERED
	January 1995	Final

4. TITLE AND SUBTITLE

COMMAND, CONTROL, COMMUNICATIONS, COMPUTERS, AND INTELLIGENCE "SYSTEM OF SYSTEMS"
Overview of Army, Air Force, Marine, Navy, Special Operations Forces, and Selected Unified Commands

5. FUNDING NUMBERS

6. AUTHOR(S)

7. PERFORMING ORGANIZATION NAME(S) AND ADDRESS(ES)

Naval Command, Control and Ocean Surveillance Center (NCCOSC)
RDT&E Division
San Diego, California 92152–5001

8. PERFORMING ORGANIZATION REPORT NUMBER

NRaD TD 2936

9. SPONSORING/MONITORING AGENCY NAME(S) AND ADDRESS(ES)

Naval Command, Control and Ocean Surveillance Center (NCCOSC)
RDT&E Division
San Diego, California 92152–5001

10. SPONSORING/MONITORING AGENCY REPORT NUMBER

11. SUPPLEMENTARY NOTES

12a. DISTRIBUTION/AVAILABILITY STATEMENT

Approved for public release; distribution is unlimited.

12b. DISTRIBUTION CODE

13. ABSTRACT *(Maximum 200 words)*

This document provides a summary of C^4I architecture for people new to C^4I and for executives and others who need a ready reference of systems, architectures, and acronyms.

14. SUBJECT TERMS

Mission Area: Command, Control, Communications, Computers, and Intelligence

15. NUMBER OF PAGES

105

16. PRICE CODE

17. SECURITY CLASSIFICATION OF REPORT	18. SECURITY CLASSIFICATION OF THIS PAGE	19. SECURITY CLASSIFICATION OF ABSTRACT	20. LIMITATION OF ABSTRACT
UNCLASSIFIED	UNCLASSIFIED	UNCLASSIFIED	SAME AS REPORT