Technical Report 1721
June 1996

Synthetic Theater of War (STOW) Engineering Demonstration-1 (ED-1) Final Report

T. R. Tiernan

Approved for public release; distribution is unlimited.

ADS PROGRAM DIRECTOR

DEFENSE ADVANCED RESEARCH PROJECTS AGENCY
Robert Reddy, Colonel USA
Larry Budge, MGEN USA (R)

SYSTEMS ENGINEERING & INTEGRATION AGENT

NAVAL COMMAND, CONTROL AND OCEAN SURVEILLANCE CENTER
RDT&E DIVISION
Thomas R. Tiernan

SYSTEMS ENGINEERING TEAM

NAVAL COMMAND, CONTROL AND OCEAN SURVEILLANCE
CENTER RDT&E DIVISION
Chuck Peters
Susie Hartzog
Peter Wussow

STOW ANALYSIS

INSTITUTE FOR DEFENSE ANALYSES
Rae Dehncke
Joe Owen
Jamie Gardner

EXECUTIVE SUMMARY

This executive summary provides the essence of the results of Engineering Demonstration-1 (ED-1), which was conducted 17–20 October 1995. The report for Engineering Demonstration-1A (ED-1A), which was conducted 14–16 November 1995, will be published in a separate document. ED-1 was conducted on both the Advanced Communication Technology Satellite (ACTS) Asynchronous Transfer Mode (ATM) Internetwork (AAI)/Advanced Technology Demonstration Network (ATDNet) and the Defense Simulation Internet (DSI) over a period of 2 days. The Synthetic Environment (SE) portion was done on Day 1 over the AAI/ATDNet between the Naval Command, Control and Ocean Surveillance Center (NCCOSC) Research, Development, Test and Evaluation (RDT&E) Division (NRaD), the Institute for Defense Analyses (IDA), the Defense Advanced Research Projects Agency (DARPA), the Applied Research Laboratories:University of Texas (ARL:UT), and the Topographic Engineering Center (TEC). The ED-1 Scenario was run on Day 2 over the DSI between NRaD, IDA, What If Simulation System for Advanced Research and Development (WISSARD), and the United States Atlantic Command (USACOM) at the Joint Training and Analysis Simulation Center (JTASC). The ED-1 Scenario Synthetic Forces (SF) participants included Navy Synthetic Forces (NSF), Marine Corps Synthetic Forces (MCSF), Command Forces (CFOR), Intelligent Forces (IFOR), Air Force Synthetic Force (AFSF), and Army Synthetic Forces (ASF).

The Synthetic Environment demonstration portion of ED-1 successfully demonstrated the following environmental effects:

- Illumination flares, signal flares, and signal smoke;
- Dynamic time-of-day;
- Wind effects (velocity and direction);
- Concertina wire;
- Battlefield smoke and obscurants;
- Minefield breaching;
- Anti-tank ditch breaching;
- Dust storm, rain, fog, haze;
- Pre-emplaced survivability positions and obstacles;
- Multistate objects (bridges/buildings).

The Synthetic Forces demonstration portion of ED-1 successfully demonstrated the following:

- Five Ships—maneuvering and damage;
- Sensors and weapons functionality;
- 18 new Marine Corps entity types;
- Embark/Disembark functionality;
- Suppressive fire;
- Attachment;

- IFOR—Fixed Wing Aircraft (FWA) Defensive Air, Close Air Support (CAS) combined strike, Rotary Wing Aircraft (RWA)—armed reconnaissance, attack;
- IFOR FWA reacted correctly to unexpected interactions;
- Forward Air Controller (FAC);
- Bridges were destroyed, providing a barrier to ground vehicles;
- Tanks deployed smoke, changed speed/formation when entering, leaving smoke screen;
- Forward Observer (FO)—Detected, classified, and reported;
- Company team commander;
- Received/sent Command Control Software Interface Language (CCSIL) messages;
- Planned/replanned missions.

CONTENTS

EXECUTIVE SUMMARY . . . . . **i**

1. INTRODUCTION **1**

1.1 PURPOSE OF DOCUMENT 1

1.2 PROJECT BACKGROUND 1

1.3 PROBLEM DEFINITION 1

1.3.1 Evaluate System Performance 1

1.3.2 Assess Capabilities, Status, Maturity 1

1.3.3 Risks 2

2. DATA COLLECTION AND REDUCTION **3**

2.1 TOOLS 3

2.1.1 Army 4

2.1.2 Navy 4

2.1.3 Marine Corps 4

2.1.4 Air Force 4

2.1.5 Synthetic Environment 5

2.2 CONFIGURATIONS 5

2.2.1 Army Configurations 5

2.2.2 Navy Configurations 6

2.2.3 Marine Corps Configurations 7

2.2.4 Air Force Configurations 7

2.2.5 Synthetic Environments Configurations 9

2.3 DATA SUMMARY 10

2.3.1 Army Data Summary 10

2.3.2 Navy Data Summary 12

2.3.3 Marine Corps Data Summary 12

2.3.4 Air Force Data Summary 13

2.3.5 SE Data Summary 13

3. ANALYSIS **15**

3.1 METHODS 15

3.1.1 Army Analysis Methods 15

3.1.2 Navy Analysis Methods 15

3.1.3 Marine Corps Analysis Methods 20

3.1.4 Air Force Analysis Methods 21

3.2 RESULTS SUMMARY, DISCUSSION, AND CONCLUSIONS 22

3.2.1 Individual Technologies 22

3.2.2 Behaviors 31

3.2.3 Synthetic Forces Interoperability 39

4. RECOMMENDATIONS 45
4.1 ARMY 45
4.1.1 Command Forces Recommendations 45
4.1.2 Intelligent Forces Recommendations 45
4.1.3 STRICOM Recommendations 45
4.2 NAVY 46
4.3 MARINE CORPS 46
4.4 AIR FORCE 46
4.5 SYNTHETIC ENVIRONMENT 47

5. SUPPORTING DATA 49
5.1 SYNTHETIC FORCES 49
5.1.1 Army Supporting Data 49
5.1.2 Navy 49
5.1.3 Marine Corps 49
5.1.4 Air Force 49
5.2 SYNTHETIC ENVIRONMENT 49

6. REFERENCES 51
6.1 GOVERNMENT DOCUMENTS 51
6.2 NON-GOVERNMENT DOCUMENTS 51

7. ACRONYMS 53

Appendices

A: PROBLEM CHANGE REPORT (PCR) LIST A-1
A-1 INTRODUCTION A-1
A-2 NAVY SYNTHETIC FORCES A-1
A-3 MARINE CORPS SYNTHETIC FORCES A-2

B: ARMY SYNTHETIC FORCES SUPPORTING DATA B-1
B-1 IFOR CAPABILITIES B-1
B-1.1 RWA Capabilities B-1
B-1.2 FWA B-4
B-2 IFOR PCRS B-9
B-2.1 FWA B-9
B-2.2 RWA B-10

C: NAVY SYNTHETIC FORCES SUPPORTING DATA C-1
C-1. ENGINEERING – BASIC HULL C-1
C-2. ENGINEERING – POWERPLANT C-1
C-3. ENGINEERING – FUEL CONSUMPTION C-2
C-4. OPERATIONS – MANEUVERING C-2
C-5. OPERATIONS – GPS C-2

C-6. OPERATIONS – VOICE NETS C-3
C-7. WEAPONS SYSTEMS – Mk 45 5-INCH GUN C-3
C-8. WEAPONS SYSTEMS – Mk 34/86 GFCS C-4
C-9. WEAPONS SYSTEMS – Mk 15 CIWS C-4
C-10. WEAPONS SYSTEMS – Mk 7/8 AWS C-5
C-11. WEAPONS SYSTEMS – TWCS C-5
C-12. WEAPONS SYSTEMS – HWS C-6
C-13. WEAPONS SYSTEMS – Mk 57 NSSMS C-6
C-14. WEAPONS SYSTEMS – HARPOON MISSILE C-7
C-15. WEAPONS SYSTEMS – TOMAHAWK MISSILE C-7
C-16. WEAPONS SYSTEMS – SM2 MISSILE C-8
C-17. WEAPONS SYSTEMS – SEA SPARROW MISSILE C-8
C-18. SENSORS – AN/SPY–1B/D C-8
C-19. SENSORS – AN/SPS–49 . . . . . C-9
C-20. SENSORS – AN/SPS–55 . . . . . C-9
C-21. SENSORS – AN/SPS–67 . . . . . C-10
C-22. SENSORS – AN/SPS–40 . . . . . C-10
C-23. SENSORS – AN/SPS–48E C-10
C-24. SENSORS – AN/SPS–64 . . . . . C-11
C-25. SENSORS – SH–60 LAMPS Mk III C-11

D: MARINE CORPS SYNTHETIC FORCES SUPPORTING DATA D-1
VIGNETTE 1: CAMP PENDLETON: D-1
VIGNETTE 1: PHASE LINE BLACK, TO PHASE LINE RED D-5
VIGNETTE 2 & 3: DELTA CORRIDOR & R400 . . . . . D-7
VIGNETTE 2: PHASE LINE YELLOW, TO PHASE LINE ORANGE: D-11
VIGNETTE 3: PHASE LINE ORANGE, TO PHASE LINE GREEN D-12
VIGNETTE 3: PHASE LINE GREEN TO PHASE LINE RED. D-15
PHASE 5. PHASE LINE RED TO BATTALION OBJECTIVE H D-19

E: AIR FORCES SYNTHETIC FORCES SUPPORTING DATA E-1

F: CONFIGURATION DIAGRAMS F-1

Figures

F-1. Classified electrical and fiber-optic connectivity at NRaD during Day 4 for ED-1 . . . . . F-2
F-2. Classified hardware configuration at IDA during Day 4 for ED-1 . . . . . F-3
F-3. Configuration at USACOM during Day 4 for ED-1 . . . . . F-4
F-4. Configuration at WISSARD during Day 4 for ED-1 . . . . . F-5
F-5. Configuration at TEC during Day 4 for ED-1 . . . . . F-6
F-6. Classified site diagram F-7

F-7. Unclassified hardware configuration at NRaD for ED-1 . . . . . F-8
F-8. Unclassified hardware configuration at IDA for ED-1 . . . . . F-9
F-9. Unclassified hardware configuration at NRL for ED-1 . . . . . F-10
F-10. Unclassified hardware configuration at TEC for ED-1 . . . . . F-11
F-11. Unclassified hardware configuration at ARL:UT for ED-1 . . . . . F-12
F-12. Unclassified hardware configuration at DARPA for ED-1 . . . . . F-13
F-13. Unclassified site diagram F-14

Tables

1. Data collection tools and techniques 3
2. Data reduction tools and techniques 3
3. Analysis tools and techniques 4
4. WISSARD SMEs 16
5. Navy SF ED-1 analysis items 20
6. Army IFOR ED-1 analysis items 24
7. Marine Corps SF ED-1 analysis items 25
8. First scenario, first vignette 27
9. First scenario, second vignette 28
10. First scenario, third vignette 29
11. First scenario, fourth vignette 29
12. Second scenario, the Samarian Trench 30
A-1. Navy Synthetic Forces PCRs A-1
A-2. Marine Corps Synthetic Forces PCRs A-2

1. INTRODUCTION

Section 1 describes the purpose of this document, discusses the project's background, and offers a definition of the data collection and analysis problem.

1.1 PURPOSE OF DOCUMENT

This document reports the results of defining, measuring, and analyzing the performance factors and limitations of the interaction of Synthetic Forces, Synthetic Environment, and advanced technologies over the Advanced Communication Technology Satellite (ACTS) Asynchronous Transfer Mode (ATM) Internetwork (AAI/ATDNet) and the Defense Simulation Internet (DSI).

1.2 PROJECT BACKGROUND

The Synthetic Theater of War (STOW) is an Advanced Concept Technology Demonstration (ACTD) jointly sponsored by the Defense Advanced Research Projects Agency (DARPA) and the United States Atlantic Command (USACOM). The objective of STOW is to develop a synthetic theater of war combining virtual and constructive simulation in the areas of mission rehearsal and Joint Task Force (JTF) training. The STOW program is composed of a series of engineering demonstrations that will integrate Distributed Interactive Simulation (DIS) technologies in preparation for joint applications demonstrations. Engineering Demonstration-1 (ED-1) focused on the integration of the various technologies, with emphasis on engineering and analysis.

STOW will significantly increase the scope of distributed interactive simulation. Not only will the number of supported entities dramatically increase, but the richness of the synthetic environment will be enhanced through the addition of smoke, dynamic terrain, and weather. The introduction of command forces (CFOR) and Command, Control, Communications, and Intelligence (C^3I) simulation will also increase the complexity of interactions and behaviors. The net result will be large increases in complexity and interdependence. Information that must be exchanged will also increase.

1.3 PROBLEM DEFINITION

This report addresses analyzing test results and collected data to enable the project team to (1) learn how to best configure system components for acceptable network and simulation performance and interoperability, and (2) determine which performance factors are critical, how they are related to one another, what the performance limits are, and how the system behaves near its limits.

1.3.1 Evaluate System Performance

A thorough, objective analysis of collected data and test results enabled the project team to objectively evaluate system performance along the path to STOW 97.

1.3.2 Assess Capabilities, Status, Maturity

Analysis of collected data and test results provides a means of assessing the capabilities, status, and maturity of Synthetic Forces, Synthetic Environment, and advanced technologies.

1.3.3 Risks

A thorough, objective analysis of data collected during ED-1 will enable the project team to avoid the risk of repeating mistakes during ED-2 or pursuing technology alternatives that show little or no promise.

2. DATA COLLECTION AND REDUCTION

Section 2 describes data collection tools and network configurations used in STOW ED-1. It also provides a brief descriptive summary of the collected data.

2.1 TOOLS

The tools used in STOW ED-1 for data collection, reduction, and analysis are described below.

1. Collection. The ACUSOFT Version 3.0 data logger recorded broadcast LAN PDU traffic. NRaD modified the data logger to record multicast LAN PDU traffic. WAN packets were recorded with the UNIX utility, TCPDump. The Hewlett-Packard (HP) OpenView Network Node Manager, Version 3.31, was used to query, read, and record Management Information Base (MIB) variables once each minute. Table 1 lists and summarizes data collection tools and techniques.
2. Reduction. Data reduction separates “ground-truth” information from the raw data collected during the test. This section defines required data reduction tools and techniques. Table 2 lists and summarizes required data reduction tools and techniques.
3. Analysis. Analyses were performed during the actual progress of tests, and some were completed after the tests were over. Some analyses had to be performed during the test because the analysis results were needed in real time for network diagnostics and troubleshooting. Table 3 lists and summarizes analysis tools and techniques.

Table 1. Data collection tools and techniques.

Manufacturer	Name	Version	Description
	TCPDump		UNIX utility that reads and records WAN packet traffic in binary data files.
ACUSOFT	Modified (by NRaD) ACUSOFT Data Logger	3.0	Reads and records LAN DIS PDU traffic in binary data files.
NRaD	Test log forms		Records entity behaviors observed on Plan View Display (PVD) or “Stealth” (3-D) display in real time, for a qualitative analysis of simulation test results.

Table 2. Data reduction tools and techniques.

Manufacturer	Name	Version	Description
NRaD	(Computer program)		Converts space-delimited ASCII files written by HP OpenView into comma-delimited ASCII files that PV-Wave can read.

Table 3. Analysis tools and techniques.

Manufacturer	Name	Version	Description
LORAL Advanced Distributed Simulation (LADS)	ModStealth	1.0a	Provides real-time, “Stealth” (3-D) display of entity behaviors that facilitates qualitative analysis of simulation test results.

Analysis tools utilized by the different technology areas are provided in the following subparagraphs.

2.1.1 Army

The analysis tool used by CFOR was an ACUSOFT data logger located at IDA that was used to record the CFOR data for later replay, as required. Handwritten notes were also recorded by a Subject Matter Expert (SME), Scott Carey. Mr. Carey, a career Army Armor officer, retired, now working at Logicon RDA. The tools used by Intelligent Forces (IFOR) were the ModSAF Plan View Display (PVD), the Soar trace and interaction windows, and paper for taking notes. For Army SF tools, Simulation, Training and Instrumentation Command (STRICOM) reported monitoring tests, took notes, manually logged events and activities, held discussions with operators and support personnel, and filled out the assessment templates. Worksheets containing all the raw data are available upon request, but are not supplied in this report. Additional tools used were data logger output and Stealth video.

2.1.2 Navy

The Navy Air and Air Force tools are combined in paragraph 2.1.4. For Navy (Surface) Synthetic Forces, all data were collected at NRaD by K. Ferguson, R. Medved, W. Buchanan, and B. Leef of Advanced Telecommunications, Incorporated (ATI). All analyses were performed at NRaD and ATI by K. Ferguson and R. Medved. The collection method was to execute ED-1 vignettes and observe entity appearance, characteristics, and operational capabilities on the ModSAF PVD or ModStealth display. Entity appearance, characteristics, and operational capabilities observed were recorded on data collection logs.

2.1.3 Marine Corps

The analysis tools used by MCSF were the MCSF PVD, ModStealth, CommandTalk Interpreter Window, and paper for taking notes. MCSF personnel manually logged events and activities, and engaged in discussions with Graphical User Interface (GUI) operators and SMEs (including representatives from MITRE, BMH, and ATI), and filled out assessment templates. The SMEs were Mack Brewer, Terry Tucker, Tony Osterman, Dave Long, and Mike Olivier. SMEs are retired Marine Corps officers, ranging from Colonel to Major, with expertise in infantry, tank command, and amphibious track vehicles.

2.1.4 Air Force

The Air Force Synthetic Forces (AFSF) were operated from the What If Simulation System for Advanced Research and Development (WISSARD) lab in NAS Oceana, VA. During ED-1, the ModSAF PVD was used to monitor the tests. Electronic Systems Command (ESC)/AVMW and Loral Advanced Distributed Simulation (LADS) personnel took notes and manually logged events

and activities while observing the PVD. On several occasions, USAF/XOM also provided personnel, and their observations were also recorded. Problem Change Reports (PCRs) or other types of data collection formats were not used during ED-1. Ad hoc discussions were conducted to identify problems with entity behaviors and possible solutions to be worked for the next test period. The data logger was also used to record ED-1 activities.

2.1.5 Synthetic Environment

Use of ModStealth and the ModSAF PVD was paramount for determining at TEC, and at all other outlying sites, that the phenomenology, weather, terrain, and interactions between each of these elements appeared correct and that entity behaviors were correct. For example, all sites were responsible for visually inspecting the correct visualization of the colored signal smoke, signal flares, and colored illumination flares, as well as the types of weather simulated. Furthermore, an entity must behave and react properly to signal smoke and react appropriately with reduced visibilities. Use of ModStealth was essential to qualitatively measure the success of the various SE elements demonstrated for ED-1. In addition to using ModStealth to visually measure changes to the Synthetic Environment, all sites would confirm changes in environmental parameters through the use of ModSAF's Environmental Editor on the PVD. For example, when TEC issued a change in the wind speed and direction from the Environmental Master, all sites verified the exact values with the ModSAF Environmental Editor. If any anomalies had occurred, detailed situation notes and PCRs would have been filled out. No data loggers were utilized until after the unclassified ED-1, Day 1, activities.

2.2 CONFIGURATIONS

ED-1 used the DSI and the ATM WAN (a union of the Advanced Communication Technology Satellite AAI and the ATDNet). All LANs supported Silicon Graphics, Inc. (SGI) workstations connected by ethernet, and running ModSAF to generate DIS entities. SGI workstations were also data loggers at NRaD and IDA. WAN and LAN configurations are illustrated in Appendix F. The configurations used by the different technology areas are contained in the following paragraphs.

2.2.1 Army Configurations

The Army configurations were subdivided into CFOR, IFOR, and Army SF. The following paragraphs describe the configurations.

2.2.1.1 CFOR Configuration. The CFOR team, which consisted of members from Science Application International Corporation (SAIC) (Rob Calder and Rich Carreiro provided Company Team Commander software support), ARL:UT (Marty Howard, Alan Wolf, Farrell Rowe, and Mike Thompson provided Forward Observer software support), MITRE (Dave Seidel, Marnie Salisbury, Dr. Lashon Booker, Ben King, Kurt Louis, Jeff Pace, and James Hughes provided systems engineering and CFOR Infrastructure and CCSIL_SAF software support), Logicon RDA (Scott Carey provided SME support), and NRaD (Susie Hartzog provided overall test coordination support), was on-site at IDA during ED-1. ModStealth and an ACUSOFT data logger were run at IDA to support all participants at the IDA site. The following CFOR applications were each run on SGI platforms at IDA:

1. CFOR Commander of Company Team A/2-67;
2. CFOR Commander of Company Team C/1-12;
3. CCSIL_SAF GUI;

4. CCSIL_SAF SIM (back-end) for Company Teams A and C;
5. Forward Observer (which included its own CFOR Monitor for the display of CCSIL messages);
6. Battalion (Bn) Workstation;
7. CFOR Monitor.

2.2.1.2 IFOR Configuration. The IFOR fixed wing aircraft (FWA) and rotary wing aircraft (RWA) agents operated from WISSARD. The RWA agents ran on a single SGI Indigo2 R4400 workstation that was shipped to WISSARD from USC/ISI for ED-1. Once an RWA scenario started, the PVD on this workstation was frozen to free up as many cycles as possible for the RWA agents. A second SGI workstation (a WISSARD Indy) generated the OPFOR for the RWA agents, and provided a PVD for observing the behavior of the RWA scenarios. The FWA agents ran on two SGI Indigo2 R4400 workstations, one shipped to WISSARD from the University of Michigan and the other from WISSARD.

2.2.1.3 Army SF Configuration. Assessment templates were used as a data collection and analysis technique for use as an easy-to-use, structured approach. Each assessment template was tailored to the unique needs of each Service-specific user group—Army Land, Marine Ops, Navy, and Air Force.

2.2.2 Navy Configurations

The Navy Synthetic Forces (NSF) were provided by NRaD (surface ships) and WISSARD (Navy Air).

1. The Navy Air Synthetic Forces were operated from WISSARD and configurations were included with the Air Force SF.
2. Navy SF software development and testing were conducted on SGI UNIX-based computers provided by the project sponsor. While development took place on “pocket” systems, testing was usually conducted using a minimum of two machines, one “front-end” and one “back-end.” It was discovered during the Unit Verification Test (UVT) that successful pocket SF testing did not mean successful testing when running separate front- and back-ends, thus, all future testing will be conducted with separate front- and back-ends. Integrated Technologies (IT) testing was conducted in this manner during the Test Continuum with remote sites over the DSI. During the Test Continuum, Navy SF used 3 front-ends and 11 back-ends that included a back-end for the Ordnance Server (OS). System loading and load leveling became issues during the high-traffic times of ED-1; further work will need to be done in this area. Navy SF is being developed by extensions and modifications to the existing Modular Semi-Automated Forces (ModSAF) applications (based on 1.5.1 and Command and Control Simulation Interface Language (CCSIL) extensions 1.3.2), and by creating new code, where necessary, to support requirements not included in existing ModSAF applications. New versions were compiled almost daily during the Test Continuum until the code was frozen for ED-1. The ED-1 version was Navy SF 1.4.0.AC. The OS software, also classified, included a Tomahawk flyout requiring a DOS emulator to be run on an SGI. Input to the Tomahawk flyout included preplanned Tomahawk missions run through a validated mission planner at Dahlgren. The ACUSOFT data logger was run to record the DIS Protocol Data Units (PDUs) for later playback; the LADS ModStealth was run to view the three-dimensional world; and the NRaD

PVD was run to verify two-dimensional positioning. The Navy SF TDB used was Southwest U.S. Area 2.

2.2.3 Marine Corps Configurations

Marine Corps Synthetic Forces (MCSF) participated in six phases of MCSF testing that included stand-alone MCSF testing over DSI, and various interoperability testing with other synthetic forces, as well as synthetic environment.

1. System and Supporting Hardware. All the MCSF machines were running IRIX 5.3 and MCSF 1.5.1 that are based on ModSAF 1.5.1. A total of 10 machines were used, 2 running Semi-Automated Forces Stations (SAFSTAs) and 8 running Semi-Automated Forces Simulation (SAFSIMs). All machines are located at NRaD.

2.2.4 Air Force Configurations

The following information is divided into information provided by ESC and WISSARD.

1. ESC. ESC configurations were as follows:
   - Software: ModSAF version 2.0;
   - Equipment: One SPARC 20 and one Indy;
   - Location: Air Force was at WISSARD in NAS Oceana, VA, and Army was at IDA in Alexandria, VA;
   - Terrain: All testing was done in the Ground Maneuver Box (GMB) with the Army SF providing ground targets for the Close Air Support (CAS) missions. Dynamic bridges were targeted for Air Interdiction (AI) missions and were contained in the Terrain Data Base (TDB).
2. WISSARD configurations. The specific hardware configuration utilized at WISSARD for the AFSF and AirSAF consisted of:
   - Blue Air: SGI R4000 pocket system running WISSARD Air SF;
   - Red Air: SGI R4000 pocket system running WISSARD Air SF;
   - Ground Targets: SGI R4000 pocket system running MCSF;
   - Data Logger: SGI R4000 (*The Loral developed ModSAF data logger was used. See comments above concerning ACUSOFT.);
   - Plan View Display: SGI R4000 (NRaD 2d PVD version);
   - Ordnance Server: SGI R3000 switched to SGI R4400;
   - Application Gateway: SGI R4400;
   - IFOR FWA: 2 x SGI R4400;
   - IFOR RWA: 2 x SGI R4400;
   - AFSF: SGI R4400;
   - AFSF: SUN Sparc 20.

   a. WISSARD's hardware configuration was barely adequate for ED-1. This was due to a shortage of equipment that was further hampered by requirements to perform additional

tasking over that originally specified in June time-frame. The hardware limitations highlighted performance shortfalls in some LAN systems. Several specifics identified were as follows:

(1) The lack of equipment at WISSARD forced the utilization of SF pocket systems where both the SF Simulation (SIM) and the Graphic User Interface (GUI) were forced to run on the same machine as opposed to the normal "pairing of computers" for the same requirement. Coupled with the level of detail of the terrain for Area 2 and the GMB, WISSARD SGI R4000 systems were often "overloaded," resulting in numerous "out-of-cycle" messages and much slower than desired simulation.

(2) OS performance was unsatisfactory when utilizing an SGI R3000-based computer. In every case, this machine would stop performing the server function despite serving only one instance. When switched to an SGI R4000-based computer, it appeared one OS machine could adequately serve two instances with few problems.

b. BMH Associates and the NAS Oceana-based WISSARD Tactical Research Facility supplied all Navy, Marine Corps, and OPFOR fixed wing and rotary wing air asset SF requirements during ED-1 testing. This was accomplished through the use of scheduled events and cyclic operations as derived from an exercise Air Tasking Order and on-call events from Marine Corps and Navy Surface SF units operated from NRaD.

c. The WISSARD lab hosted its own SF activities (Navy and Marine Corps aviation plus CCSIL testing) as well as the AFSF team from Hanscom AFB and WISSARD's IFOR fixed and rotary wing team from the University of Michigan and the University of Southern California's Information Sciences Institute.

d. The majority of events for fixed wing operations were generated using AirSAF (ModSAF 1.5.1 optimized for Navy and Marine Corps fixed wing air operation requirements) supplemented by IFOR agents flying SF vehicles. RWA activity was generated mainly in support of Marine Corps objectives GMB terrain data base with the one significant exception being an Over-The-Horizon (OTH) targeting mission utilizing an SF SH-60 helicopter and SF Aegis passing CCSIL messages between themselves. Additionally, numerous IFOR RWA missions were flown from WISSARD in the GMB to support Marine Corps requirements.

e. As a central site, WISSARD performed the following:

(1) Carrier Battle Group (CVBG) air operations in support of an air tasking order similar to one that could be disseminated by a Joint Forces Air Component Commander (JFACC). These consisted of operations involving Air Warfare, Surface Warfare, Strike Warfare (STW), Airborne Early Warning (AEW), and Forward Air Control (FAC) FWA missions and Surface Warfare RWA missions.

(2) Marine Air Ground Task Force (MAGTF) air operations, both FWA and RWA, in support of amphibious operations. Performed pre-planned and on-call CAS and RWA troop transport missions, FW and RW Strike and RW escort.

(3) Ground entity simulation for target utilization.

(4) Adversary air missions in support of a JTF simulation exercise. Provided offensive and defensive air, surface, and strike warfare missions.

(5) IFOR FW and RW events that executed the missions of a strike, CAS, armed reconnaissance, anti-air warfare (AAW), AEW, and aerial refueling (AAR) at a much higher fidelity level than possible utilizing standard SF.

f. Additional observations. WISSARD simulations were employed in both the SW/U.S. Area 2 and GMB Terrain Data Bases according to a published Air Tasking Order and as on-call requests generated real time during the exercise. WISSARD used the Network Time Protocol (NTP), which received its timing information from a Global Positioning System (GPS) sensor permanently installed at the site. An OS was utilized to simulate valid flyouts of all weapons expended by AirSAF entities that are considered smart weapons, i.e., requiring guidance. Air Force Synthetic Forces also worked out of WISSARD on the equipment described above. Their missions were composed primarily of CAS and will be reported on by the AFSF team. WISSARD and NRaD performed an OTH targeting mission utilizing CCSIL to pass information between synthetic forces (SH-60 and Aegis) to minimize man-in-the-loop requirements.

2.2.5 Synthetic Environments Configurations

Two scenarios were demonstrated by Synthetic Environments (SE) from the Topographic Engineering Center (TEC) over the AAI/ATDNet in an unclassified status for Day 1 of Engineering Demonstration 1 (ED-1). There were four sites in addition to TEC that participated or viewed these scenarios:

1. Naval Command, Control and Ocean Surveillance Center (NCCOSC) Research, Development, Test and Evaluation (RDT&E) Division (NRaD);
2. Institute for Defense Analyses (IDA);
3. Applied Research Laboratories (ARL) at the University of Texas (UT);
4. Defense Advanced Research Projects Agency (DARPA).

All sites were using various versions, models, and configurations of SGI's Indigo2s for the ModSAF PVD, and various models and configurations of the Onyx for the ModStealth. Only ARL:UT used an SGI Indigo2 for their ModStealth display. To test the first scenario, SE utilized the following hardware configurations at the various sites:

1. NRaD - One SGI Indigo2 PVD and one Onyx ModStealth;
2. IDA - One SGI Indigo2 PVD and one Onyx ModStealth;
3. ARL:UT - One SGI Indigo2 PVD and one SGI Indigo2 ModStealth;
4. DARPA - One Onyx ModStealth;
5. TEC - Three SGI Indigo2 PVDs and one Onyx ModStealth.

The configurations of these machines follow. The first scenario's purpose was to showcase the many features introduced by SE to the STOW program. TEC served as the weather master for this scenario and initiated all the events that were observed by the other sites. One SGI Indigo2 controlled the scenario, and a second Indigo2 with a different persistent object (PO) database controlled the weather events. All other sites, except DARPA, used pocket systems, and all sites used ModStealth to view the event. The first scenario consisted of four vignettes:

1. Breaching exercises, examples of pre-emplaced dynamic terrain objects, flares and smoke, and visualization of weather events;
2. Weather impacts on entity behaviors;
3. Survivability positions;
4. Destruction of pre-emplaced dynamic terrain objects.

To test the second scenario, SE utilized the following hardware configurations at the various sites:

1. NRaD - Two SGI Indigo2 PVDs and one Onyx ModStealth;
2. IDA - Five SGI Indigo2 PVDs and one Onyx ModStealth;
3. ARL:UT - Four SGI Indigo2 PVDs and one SGI Indigo2 ModStealth;
4. DARPA - One Onyx ModStealth;
5. TEC - Four SGI Indigo2 PVDs and one Onyx ModStealth.

The configurations of these machines for the second scenario follows. The purpose of the second scenario, called the Samarian Trench, was to integrate many of the features that SE introduced to STOW, and to demonstrate that SE works in a distributed environment. The Samarian Trench scenario was divided into four segments:

1. Breaching force;
2. Assault force;
3. Overwatch force;
4. Opposing force.

TEC was the weather master for this scenario and controlled the breaching force. As before, the weather was controlled on an SGI Indigo2 using a unique PO data base number. The breaching force used a no-sim front-end to control the events and two back-ends to control the entities. A three-dimensional view of the scenario was accomplished with ModStealth on an Onyx. NRaD controlled the opposing forces. The opposing force used a no-sim front-end to control the events and a back-end to control their entities. A 3-D view of the scenario was accomplished with ModStealth on the Onyx. IDA controlled the overwatch forces. The overwatch force used a no-sim front-end to control the events and four back-ends to control the entities. A 3-D view of the scenario was also accomplished with ModStealth on an Onyx. Finally, ARL:UT controlled the assault forces. The assault force used a no-sim front-end to control the events and three back-ends to control the entities. A wire-frame 3-D view of the scenario was accomplished with ModStealth on an SGI Indigo 2.

2.3 DATA SUMMARY

The data collected included logging the exercises to tape using the data logger. The data included Simulation PDUs and Entity-State PDUs, as well as visual observations, and notetaking on performance, interactions, and modeling. The following paragraphs describe the individual technologies and SE data summaries.

2.3.1 Army Data Summary

The following paragraphs describe the data summary provided by the Army for CFOR, IFOR, and ASF.

1. CFOR. Overall, the participation of CFOR in ED-1 was a success. ED-1 was the first opportunity for the CFOR team to demonstrate CFOR development to the STOW community. During ED-1, the CFOR team successfully demonstrated two CFOR virtual company/team commanders (SAIC software) operating in a tactical environment alongside an operator-controlled ModSAF company in a virtual training exercise. The CFOR company commanders received a task force order, parsed the order to identify areas relevant to their respective company, conducted mission analysis to include Mission, Enemy, Terrain, Troops available, and Time (METT-T), and developed courses of action that they formatted into company-level CCSIL orders. These orders were then sent to the task force commander (simulating a briefback process) for approval. Once the task force commander approved the company orders, the CFOR companies executed these plans. From the fire support point-of-view, the FO's vignette, although not complex, was considered successful. ARL:UT demonstrated the ability to provide planned enhancements and a reimplemenation of rule sets from their existing Fire Support Automated Test System (FSATS) simulation to produce a working When Ready Fire for Effect mission thread. Prior to ED-1, the CFOR software developers were going through extensive Situational Test Exercises (STXs) and virtual Field Training Exercises (vFTXs). Results, including problems encountered in the STXs, vFTXs, and ED-1, were noted and are being addressed by the responsible organization. Seven problems were identified in ED-1. Two of these problems have been solved, and the remaining ones are still being addressed. A detailed description of the ED-1 results is listed in section 3.2.2.1. Detailed STX and vFTX results are provided in a separate document that can be obtained from NRaD.

2. IFOR. The Army IFOR data summary for ED-1 was as follows:

   a. FWA Capabilities. By the second day, all missions were flown correctly. A total of 121 capabilities were demonstrated to work effectively, with six of those being additions to what was originally planned for ED-1. (Capability refers to items listed in Appendix B.) An additional 11 capabilities were ready for ED-1 but were not demonstrated because they could not be fit into the scenarios. There were two capabilities (dropping trains of bombs and close control of aircraft by an E2) that were incorrectly or incompletely implemented could not be demonstrated at all.

   b. FWA PCRs. Although a capability was performed, in some cases, there were errors in the exact details of how the capability was performed. During ED-1, 24 problem change requests were identified. Three were removed (determined not to be real problems), two were deferred (determined to require fixes from other groups—OS), six were not fixed (low priority), and 12 were fixed.

   c. RWA Capabilities. By the second day, all missions were flown correctly. A total of 49.5 capabilities were demonstrated to work effectively, with six of those being additions to what was originally expected for ED-1. An additional five capabilities were ready for ED-1 but were not demonstrated because they could not be fit into the specific scenarios. There were 5.5 capabilities that we had planned on demonstrating but that were not completely ready for ED-1. A further four capabilities that we had planned on demonstrating were found out through further Knowledge Acquisition (KA) to actually be inappropriate and, thus, were not demonstrated in ED-1.

   d. RWA PCRs. Although a capability was performed, in some cases, there were errors in the exact details of how the capability was performed. Based on an analysis of our notes from ED-1, 24 problem change requests were identified relating to RWA. Of this total,

nine have been fixed or had substantial work done on them, five were deferred, and 10 are either just beginning or waiting to be worked on.

3. Army SF. All comments and data were collected and organized by vignette. There were three vignette scenarios played during ED-1, 19–20 October 1995.

2.3.2 Navy Data Summary

ED-1 was conducted from 17–20 Ocober 1995. On the first, third, and fourth day of ED-1, Army SF, CFOR, Navy SF, MCSF, and AFSF participated from geographically dispersed sites (NRaD, IDA, WISSARD, and JTASC). On the second day, only Navy SF, supported by Navy AirSAF at WISSARD, ran scenarios. The same version of Navy SF (version 1.4.0.AC) was run during all four days of ED-1. Three front-ends and 11 back-ends were used. The entity count on the first day was less than 300 entities, except during the last hour of the exercise, when there were 389 entities. On the second day, the entity load was much lower since only two sites participated. On the third and fourth day, there were 300 to 400 entities most of the time. During peak traffic load, there was a maximum of 457 entities. During ED-1, the CG-59, DDG-51, CVN-68, DD-963, and AOE-6 class engineering, operations, and weapons systems and sensors requirements were evaluated. Observations were recorded to determine the number of times that a requirement was demonstrated correctly (passed) and the number of times a requirement was demonstrated incorrectly (failed). In some cases, observation of a specific requirement was not recorded, even though it may have been exercised during ED-1. For maneuvering, the DDG-51 passed twice, while the DD-963 failed twice. For Voice Nets (CCSIL), there were 11 failed attempts with several different hulls. For the Mk 45 5-inch gun, the CG-59 passed four times; the DDG-51 passed 10 times and failed once; and the DD-963 passed six times and failed once. For the Mk 34/86 Gun Fire Control System (GFCS), the CG-59 passed once; the DDG-51 passed six times; and the DD-963 passed three times. For the Mk 15 Close-In Weapon System (CIWS), the CG-59 passed twice and failed once; the DDG-51 passed eight times; the CVN-68 passed once; the DD-963 passed three times; and the AOE-6 passed three times and failed once. For the Aegis Weapon System (AWS), the CG-59 passed 16 times, and the DDG-51 passed five times. For the Tomahawk Weapon Control System (TWCS), the CG-59 passed six times, and the DDG-51 passed three times. For the Harpoon Weapon System (HWS), the CG-59 passed five times; the DDG-51 passed nine times and failed once; and the DD-963 passed four times. For the Mk 57 NATO Sea Sparrow Missile System (NSSMS), the CVN-68 passed two times; the DD-963 passed five times and failed once; and the AOE-6 passed four times. For the Harpoon missile (launch, not flyout), the CG-59 passed four times, and the DDG-51 passed six times. For the Tomahawk Missile (launch, not flyout), the CG-59 passed six times, and the DDG-51 passed three times. For the SM2 Missile (launch, not flyout), the CG-59 passed 15 times, and the DDG-51 passed nine times. For the SS Missile (launch, not flyout), the DD-963 passed once, and the AOE-6 passed once. When problems were found, formal PCRs were generated and passed on to configuration management. During ED-1, 29 PCRs were generated; 14 were Navy SF problems, 10 were OS problems, and five were ModStealth problems. Appendix A contains a summary of all the Navy SF PCRs. Complete copies with more detailed descriptions are available from the Navy SF Configuration Manager.

2.3.3 Marine Corps Data Summary

The test results for MCSF are divided into four major categories. They are individual combatants (IC) that included a rifle squad, a 60-mm mortar squad, a M240 machine gun squad, and an assault team commanded by a platoon commander. Secondly, the M1A1 Tank platoon, Light Armored Reconnaissance (LAR) section, LAR-M (mortar) section, and LAR-AT (anti-tank) sections made up

the Armored element. Thirdly, an Amphibious Assault Vehicle (AAV) platoon, LVT-C7 with chase, TOW CAAT teams, TOW section, and LVT-R7, made up the Mechanized/Anti-mechanized element. Finally, the CH-53, CH-46, AH-1, and AV8B are the Air elements. All of these categories are tested within the context of the main ED-1 Test Continuum objective. The main ED-1 Test Continuum objectives were to constitute United States Marine Corps (USMC) military forces as a Marine Corps Company with attachments, and as a Marine Corps Infantry Platoon, and to conduct USMC Movement-to-Contact (at the company level) and Day Attack (at the platoon level). As a result of ED-1 testing, 51 PCRs were generated for MCSF. These PCRs were submitted to the MCSF Configuration Management Manager. As of 20 November 1995, 21 of these PCRs were fixed, tested, and closed; 10 PCRs were fixed and awaiting test; and 20 PCRs are being fixed or deferred to ED-2. Appendix A contains a summary of the MCSF PCRs.

2.3.4 Air Force Data Summary

As stated in paragraph 2.1, all data were collected, with the exception of the data logger, through personal observations of entity behaviors using the ModSAF PVD. Task Frames were used to control behaviors of the F-16C, A-10, and FAC entities in the CAS role and of the F-16C in the Air Interdiction (AI) role. The four major areas of behavior for the A-10 and F-16C evaluated were

1. Ingress;
2. Contact Point;
3. Attack Phase;
4. Egress along with the communications with the FAC.

Both the A-10 and F-16C Ingress and Egress had problems with formations, but airspeed, altitude, and route-following were good when ED-1 concluded. Contact Point and FAC communication were good but only Time-on-Station was tested to end the CAS task. BINGO fuel and weapons expenditure were not tested for ending the CAS task. For CAS, there were several major problems in the Attack Phase, mainly with target acquisition and target priority. Target damage was not as expected during the Attack Phase.

2.3.5 SE Data Summary

The first scenario's purpose was to showcase the many features introduced by SE to STOW. The first scenario was divided into four vignettes, each vignette with a number of events. Vignette 1 had 12 events, vignette 2 had four events, vignette 3 had three events, and vignette 4 had four events. ModStealth was used to correctly visualize these events. ModStealth is a RITN interface between ModSAF and a Computer Image Generator (CIG). For ED-1, the CIG used throughout was Vista-Works. Other CIGs are expected to be connected to ModStealth to compare and analyze the strengths and weakness of each platform. The matrix in section 3.2.1.2 lists the individual events and their results in each vignette for the first scenario. The second scenario, called the Samarian Trench, was to integrate many of the features that SE introduced to STOW and to demonstrate the SE work in a distributed environment. This scenario contained 11 events and was modeled after a previous live exercise at the National Training Center (NTC). The results of this scenario was highly successful, though there was one notable exception that was corrected. During the scenario, after the Armored Vehicle Launched Bridges (AVLB) bridges were successfully laid across the anti-tank ditch, there were a number of vehicles that tracked directly toward the anti-tank ditch and fell into the ditch, rather than correctly laying a route to the other side of the ditch via the AVLB bridges.

Several other vehicles did make the correct route across the bridges, and successfully crossed the anti-tank ditch. A patch for ModSAF to correct this routing problem was available the morning of the exercise, but a decision was made at TEC not to make the change. This last-minute patch was not tested over the net, and it was not known whether there would be any other ill effects on the program by making this change. This patch has since been tested, and the scenario now works properly. Overall, the first day of ED-1 was considered highly successful by demonstrating the work introduced by SE to the STOW community, and interfacing with all the outlying sites participating in the demonstration using the new Real-Time Information Transfer and Networking (RITN) code. Though the RITN code was not part of the SE work, there was considerable cooperation between the two programs to make the code work for this part of the demonstration of ED-1.

3. ANALYSIS

3.1 METHODS

The methods used for analysis varied for the different technology areas. The following paragraphs describe each technological area's methods of analysis.

3.1.1 Army Analysis Methods

1. CFOR. The CFOR Analysis methods called for a Subject Matter Expert (SME), Scott Carey, a retired career Army Armor officer from Logicon RDA, to witness the CFOR behavior via the ModSAF GUI and ModStealth, and record results subjectively. The CFOR monitor captured and displayed CCSIL messages. Additionally, the ACUSOFT data logger recorded results for later playback, as required.
2. IFOR. Analysis for FWA was performed in two phases. The first phase was on-site during ED-1 by technical personnel observing the behavior of the agents and checking for correct execution. The second phase was an analysis by Mark Checchio (former USN pilot) of BMH based on communication logs and repeats of the scenarios. Analysis for RWA was performed primarily on-site during ED-1 by Information Sciences Institute (ISI) technical personnel and Captain Don Lassiter of Fort Rucker observing the behavior of the agents. However, some post-analysis was done based on the notes taken during ED-1 (such as the extraction of a list of PCRs).
3. Army Synthetic Forces. A two-step data reduction and consolidation process was used from the data that were collected from the SMEs' assessment templates. First, comments were collected and organized by vignette. Second, a roll-up of the comment database was organized into nine categories that represent the Primary Tactical Assessment Results. These categories included the following:
   - Planning and coordination, mission preparation;
   - Synthetic environment; interoperability, and mission objectives;
   - Order of battle;
   - Red and Blue Forces;
   - Coordination with interoperating forces;
   - CFOR;
   - IFOR and ModSAF comparison;
   - Service contributions and mission completion;
   - Data collection and reporting.

These broad areas of concern also had several subcategories for additional detail. Note that some of the perceived weaknesses were there by design—known hardware limitations, stopping points in the scenario, lack of specific C^2 structure above the participating units, etc.

3.1.2 Navy Analysis Methods

The Navy analysis methods were divided into Navy Air (WISSARD) and Navy Surface.

1. Navy Air. WISSARD logged all PDU traffic received at WISSARD, utilizing the LORAL-developed ModSAF data logger. The primary purpose was for playback and reconstruction. Although a rudimentary look could be performed to determine the information contained within each PDU, a worthwhile analysis of this data would require additional hardware not presently available to WISSARD. The primary analysis method was through retired military SMEs viewing the entire series of events on SGI Indy R4000 series computers. The total analysis effort was a team effort in which the member with the most experience and expertise for the event observed the behaviors and performance, then reported the results for recording. All performance and behaviors cannot be fairly evaluated until valid models representing aircraft systems and performance are developed and implemented. Although behaviors and performance are all considered inadequate for valid representation, they are a quantum improvement over present systems. Table 4 lists the SME qualifications. The following analyses were conducted by WISSARD personnel:

   a. Navy AirSAF

      (1) Performance of Carrier Battle Group air operations in support of an air tasking order disseminated by a JFACC. Executed continuous operations involving all warfare areas presently represented in AirSAF. Basic representation of air capabilities was adequate to support large campaign-level exercises. Individual performance of entities to execute certain aspects of their missions range from adequate to unsatisfactory or nonexistent, dependent on which behavior was evaluated.

      (2) IFOR FWA performance in support of fulfilling air tasking order requirements with realistic behaviors in AAW, STW, CAS, AEW, FAC, Suppression of Enemy Air Defense (SEAD), and Air-to-Air Refueling (AAR). Behaviors exhibited by IFOR agents flying AirSAF vehicles simulated real-world performance to a degree of fidelity previously unavailable in modeling and simulation. Of key importance was the incorporation of the element of Command and Control from one SF entity to another in numerous mission areas utilizing plain English voice communications. IFOR agents demonstrated as close to human performance as is presently available anywhere in simulation. The greatest deficiency evident was the limitation placed on the agents' performance due to inadequacy of the models making up the physical vehicles utilized by each agent.

Table 4. WISSARD SMEs.

Service/Rank	Experience (years)	Area of Expertise
Navy Commander	20	Fighter/Command/Strike
Army Colonel	28	Helicopter/Command
Marine Lt. Colonel	26	Infantry/Reconnaissance
Marine Lt. Colonel	23	Artillery/Special Ops
Navy Lieutenant	22	Aegis Ninja/FAAWC
Navy LCDR	6	Deep Strike/CAS
Navy LCDR	16	Fighter
Marine CAPT	12	Infantry/Reconnaissance

b. Fixed Wing Aircraft (FWA)

(1) Tactical performance and behavior of AirSAF vehicles in performing air missions associated with all warfare areas executed by a Carrier Air Wing in fulfilling requirements of an air tasking order. With the goal of simulating real-world performance and behaviors using AirSAF, the present system is unsatisfactory. This is due primarily to the inadequacies of the models used to define systems or physical attributes needed to drive behaviors. Until the proper models are developed, a representation of behaviors and a fair evaluation of the SAF systems capabilities cannot be achieved. The following list is but a fraction of the known models that are either inadequate or nonexistent:

(a) Aerodynamics;

(b) Flight Performance;

(c) Thrust;

(d) All active sensors (radar, lasers, etc.);

(e) All passive sensors (IRST, NCTR, RHAW, Visual, etc.);

(f) Countermeasures (Electronic, Infrared, Mechanical, etc.);

(g) Fuel;

(h) Weapon Launch Acceptability Regions;

(i) Communications.

(2) Tactical aircraft performance in a defensive role when countering an attack. Unsatisfactory in all areas. AirSAF vehicles are incapable of performing any type of defensive maneuver to defeat an attack launched against them. This major deficiency can be attributed primarily to the following three areas:

(a) Lack of sensors to indicate an entity is under attack;

(b) Nonavailability of countermeasures;

(c) Nonexistent defensive behaviors required to defeat incoming attacks.

(3) Ordnance probability of hit and probability of kill for targets under attack. An apparent weakness exists in the damage model for all types of ordnance. The number of hits required to kill an entity or the number of hits that could be absorbed by an entity seemed unrealistically high based on real-world historical data. As an example, in the air-to-ground arena, an engagement between a Blue helicopter and Red tank, in which 10 hits appeared to be scored by Mavericks from the helicopter, no kill occurred. In the air-to-air arena, numerous tactically valid shots were taken with no defensive maneuvers taken by the targets, with no valid hits or kills scored. As a general observation, it appeared that for the number of weapons launched/expended in a tactically valid envelope, the probability of achieving a hit and/or kill was lower than what would be expected based on historical data. Further detailed analysis is required to determine the cause of this problem due to WISSARD's inability to perform an in-depth analysis of PDUs. These outcomes could be due to a variety of problems such as network loading, inadequate targeting systems, or inaccurate damage assessment/probability models. Due to its large effect on much of the battle

space and final outcomes, finding a solution to this problem should be given high priority.

c. Rotary Wing Aircraft (RWA)

(1) Tactical performance and behavior of RWA vehicles in performing air missions associated with fulfilling requirements from higher authority. With the goal of simulating real-world performance and behaviors using AirSAF, the present system is unsatisfactory. Excessive manual intervention is presently required to achieve what appears to be adequate performance. This is due primarily to the inadequacies of the models used to define systems, or the physical attributes needed to drive behaviors. Until the proper models are developed, a representation of behaviors and a fair evaluation of the SAF systems capabilities cannot be achieved. The following list is but a fraction of the known models that are either inadequate or nonexistent:

(a) Aerodynamics;

(b) Flight Performance;

(c) Thrust;

(d) All active sensors;

(e) All passive sensors;

(f) Countermeasures;

(g) Fuel;

(h) Weapon Launch Acceptability Regions;

(i) Communications.

(2) RWA performance in a low-altitude environment where contact with environmental and large groups of differing entities occurs. RWA are in much closer and in more frequent contact with various entities in the synthetic environment (friendly and OPFOR platforms, individual combatants, and environmental entities) than FWA. These large numbers of multiple types of entities that RWA are required to process result in excessive drops in performance capability that are unsatisfactory. RWA experienced excessive amounts of overloaded conditions (i.e., unexpected deviations from planned routes, flying into the ground, erratic performance) during high network traffic periods. Behaviors improved dramatically when operating on a pocket system when network traffic load was much lighter. This also held true for IFOR RWA behaviors.

d. Ordnance Server

(1) Compare the performance of ModSAF missiles flyouts vs. those provided through use of the OS. Although problems were encountered with the OS, the improvement in missile flyout performance and capability was impressive. The ability of aircraft to employ missiles in many more regions of the actual envelope was a marked improvement over the highly restrictive ModSAF missiles. In addition, the use of validated and realistic flyouts produced engagements that were more indicative of real-world outcomes. Current limitations and required enhancements for the OS are as follows:

(a) OS success can be dependent on hardware utilized to implement it. Utilizing an R3000-based machine to simulate missile flyouts and high network/system loading caused numerous irregularities and system crashes. This often resulted in no missile flyouts during engagements.

(b) Using an SGI R4000 series (preferably R4400) seemed to work adequately with some minor exceptions throughout ED-1 when tasked to serve a maximum of two instances in the air-to-air arena. The two instances appeared to be a maximum for R4400 machines. Placement of a third instance on the machine always precipitated a crash that required rebooting to reinitiate the OS function. Further investigation of this phenomena is required.

(c) The OS is unable to support missile flyouts if any maneuver is performed by the launching aircraft. Loss of the missiles occurs 100% of the time following even mild maneuvers. The message received is "radar illumination lost," which should not be the case, based on SME observation. Further investigation of this phenomenon is required.

(2) How well does the OS support IFOR in the employment of weapons during mission execution. IFOR agents enjoyed a much-improved capability to employ valid weapons during ED-1 using the OS. However, their behavior in performing valid tactics during air-to-air engagements created problems for the OS in supporting flyouts for reasons that were not valid (i.e., radar illumination lost) based on observations.

(3) OS ordnance libraries possess the required ordnance models to support present and future exercises. The existing OS library is severely lacking in the required ordnance models needed to support SF and their use during large-scale exercises, especially in the air-to-air arena, where the OS capabilities greatly improve existing SF weapons. As an example, the OS is unable to support the Advanced Medium Range Air-to-Air Missile (AMRAAM) missiles even though it is presently in wide use by U.S. air defenses. In addition, existing capabilities that exist in weapons are not available in some cases with OS missiles. One glaring example is the launch-and-leave capability of the Phoenix missile.

(4) Examine the OS capability to support smart air-to-ground weapons flyouts in large SF exercises with realistic performance and results. The ordnance server's library of air-to-ground smart weapons is almost nonexistent. A Maverick with very limited capability exists that is much better than the ModSAF Maverick, but it is still much less capable than the real weapon, which may actually be more a function of AirSAF deficiencies. BMH Associates has supplied a list of desired/required weapons to Patuxent River for incorporation into the OS for the Marine Corps and the Navy.

2. Navy Surface. For Navy Surface, analysis was performed by a Senior Test Engineer and a Senior Systems Analyst with Naval Surface Warfare experience. The ED-1 results, which are recorded observations of entity appearance, characteristics, and operational capabilities as viewed on the ModSAF PVD or ModStealth display, were compared with the expected entity appearance, characteristics, and operational capabilities in accordance with Navy SF software requirements. Table 5 lists the 25 Navy SF ED-1 items that were analyzed. All NSF ED-1 recorded results were categorized by analysis item and by specific hull. The results were then compared with the software requirements from the Navy SF Project Management Notebook for that specific hull. After determining the pass or fail status of the tested requirements, each

Table 5. Navy SF ED-1 analysis items.

Capability	Result
Engineering - Basic Hull	Satisfactory
Engineering - Powerplant	Satisfactory
Engineering - Fuel consumption	Not Observed
Operations - Maneuvering	Satisfactory
Operations - GPS	Satisfactory
Operations - Voice Nets	Unsatisfactory
Weapons Systems - Mk 45 5-inch GUN	Satisfactory
Weapons Systems - Mk 34 /86 GFCS	Satisfactory
Weapons Systems - Mk 15 CIWS	Unsatisfactory
Weapons Systems - Mk 7/8 AWS	Satisfactory
Weapons Systems	Satisfactory
Weapons Systems - HWS	Satisfactory
Weapons Systems - Mk 57 NSSMS	Satisfactory
Weapons Systems - Harpoon Missile	Satisfactory
Weapons Systems - Tomahawk Missile	Satisfactory
Weapons Systems - SM2 Missile	Satisfactory
Weapons Systems - Sea Sparrow Missile	Satisfactory
Weapons Systems	Satisfactory
Weapons Systems - AN/SPS-49	Satisfactory
Weapons Systems - AN/SPS-55	Satisfactory
Weapons Systems - AN/SPS-67	Satisfactory
Weapons Systems - AN/SPS-40	Satisfactory
Weapons Systems - AN/SPS-48E	Satisfactory
Weapons Systems - AN/SPS-64	Satisfactory
Weapons Systems - SH-60 LAMPS Mk III	Unsatisfactory

of the 25 items were evaluated, with consideration of UVT and IT results, and were given an overall rating of satisfactory or unsatisfactory.

3.1.3 Marine Corps Analysis Methods

Over 93 major testable items including creation of simulated entities, as well as their behaviors, were tested. Please refer to the MCSF Test Plan for the description of these items. The integration tests were repeated nine times to identify catastrophic software failures as well as future enhancements. The total number of the execution of testable items was over 837. During the 9 days of the Subsystem Integration Test (SSIT) #4/ED-1 test continuum, 51 software problems were identified (see Appendix A). For ED-1, MCSF exit criteria verified that the forces can be constituted as a

coherent grouping and be commanded by a human company commander and operate as if they were a company-level force. The measure of success is the reasonableness of overall company-level movement to contact behavior. Ratings of coordinated movement were performed by in-house SMEs (qualifications contained in paragraph 3.1) for company-level movement to contact. In addition, MCSF exit criteria also verified that the platoon could be commanded to operate as a militarily significant force. The platoon test issues center on the three phases of a platoon day attack: preparation, attack, and exploitation. The measure of success is the reasonableness of overall platoon attack behavior. Ratings were performed by in-house SMEs for platoon-level attack. The ratings were categorized as follows:

1. Fleet end-user acceptance;
2. STOW 97 acceptance;
3. ED-1 acceptance;
4. Marginal ED-1 acceptance;
5. Not acceptable.

For each of the testable items, in-house SMEs provided the ratings that were then normalized to derive overall ratings for ED-1 capabilities. Entity-level test objectives supported overall MCSF mission-based integrated test objectives for Light Armored Company and Rifle Platoons:

1. MCSF entity control using voice commands (CommandTalk);
2. MCSF Testing with IDA over DSI;
3. Major Test Vignettes of USMC Mission;
4. Testing of physical attributes;
5. Testing of entity behavior to support USMC mission;
6. Marine Corps Ground Vehicles;
7. Total Test Criteria = 93;
8. SSIT #4 Total # of Failed Test Criteria = 51*;
9. ED-1 Total # of Failed Test Criteria = 20;
10. ED-1: 78% Development Success.

*Includes duplication of PCRs and operator errors.

3.1.4 Air Force Analysis Methods

The Electronics System Command (ESC), utilizing an in-house retired military person with operational experience as the SME, worked with LADS and identified desired behaviors for a FAC, A-10, and F-16C in the CAS role and the F-16C in the AI role. USAF/XOM and Armstrong Laboratory also provided input. Four major areas of evaluation for the A-10 and F-16C were identified as follows:

1. Ingress;
2. Contact Point;

3. Attack Phase;
4. Egress, along with FAC communications.

Each area contained a specific evaluation of one or more of the following: platform performance, sensor performance, weapon performance, and pilot behaviors. Platform performance required that a specific parameter be met, such as an airspeed of 480 kn ($\pm$40 kn) on a low-level route. Sensor performance required that it reasonably simulated the real sensor and initiated a pilot behavior, such as visually acquiring and identifying a target leading to the pilot attacking the target. Weapons performance required that the employment, which is tied to pilot behaviors, weapon accuracy, and damage effect be realistic to the real weapon. An example would be that a AGM-65 Maverick would be employed in a standoff mode, and after firing the plane, would turn away from the target vs. overflying the target. Also, the accuracy and damage to the target would be reasonably similar to the real AGM-65. Pilot behavior required that a reasonable but simple behavior be initiated based on the situation and sensor input at the time, such as communicating with the FAC and acting on the information passed by the FAC. There were a total of five vignettes consisting of three CAS and two AI. CAS consisted of both A-10 and F-16C missions with a FAC and attacked OPFOR ground vehicles (mostly tanks). The AI vignettes consisted of F-16C only, but attacked two types of targets. One target set was dynamic bridges provided by Synthetic Environment, and the other set was OPFOR tanks. Nine test periods were conducted of the five ED-1 vignettes. During and after each testing period, ESC and LADS personnel reviewed their observations and identified discrepancies between the desired and actual entity behaviors. On several occasions, USAF/XOM provided personnel, and their observation were also recorded. LADS then reviewed the discrepancies at their Cambridge facility and made changes to AFSF that could be implemented before and reevaluated during the next test period.

3.2 RESULTS SUMMARY, DISCUSSION, AND CONCLUSIONS

ED-1 demonstrated the current maturity of the technologies resulting in integrated phenomenology, integrated dynamic terrain, and an improved CGF TDB within ModSAF. The SF capabilities successfully accomplished all of their major goals with some anomalies that need to be developed further. The SE effort was a major success, with the developers exceeding the expectations of the System Engineering & Integration (SE&I) Plan.

3.2.1 Individual Technologies

Synthetic Forces and Synthetic Environment results and conclusions are discussed in the following paragraphs.

3.2.1.1 Synthetic Forces. The following paragraphs describe the SF for each of the technology areas.

1. Army. The Army SF (ASF) are reported as CFOR, IFOR, and STRICOM's observations for ASF Red and Blue.
   a. CFOR. It is not the intent of the CFOR program to develop SF platforms, but behaviors of commanders who ride in SF platforms. In the Army Armor/Mechanized company, the commander's vehicle and platoons are modeled directly in Army SF (ModSAF). Anomalies in Army SF were noted, and forwarded to STRICOM for action.
   b. IFOR. During the STOW Engineering Demonstration #1 (ED-1) in October 1995, the goal of the Soar/IFOR demonstration was to demonstrate behaviors (see section 4.2.2),

not individual technologies such as airframes, weapons, or sensors. However, in order to demonstrate behaviors, the airframes, weapons, and sensors provided in ModSAF (some had to be enhanced) were relied upon. An extensive evaluation or testing of these technologies was not conducted; however, test personnel have extensive experience with them. Details of the evaluation of ModSAF support for FWA/RWA flight dynamics, weapons, and sensors are available in a document entitled *Required Extensions to ModSAF* (8 November 1995).

(1) FWA Summary. FWA demonstrated the following aircraft: F-14, F/A-18, A-10, KC-10, and E-2C. Table 6 summarizes the FWA platform and capabilities.

(2) RWA Summary. RWA demonstrated groups of Apache AH-64 attack helicopters. The platforms were configured to use only a subset of "real" AH-64 capabilities—they could fly, use a single "visual" sensor, aim lasers, and fire Hellfire missiles. These capabilities were not locally developed, although some of them (such as the Hellfire) had to be significantly adapted by local personnel for use by IFOR rather than task-based entities. Table 6 includes the RWA platform and capabilities.

c. Army (Red and Blue). These are provided as Strengths and Weaknesses, as shown below.

(1) Strengths included: In one vignette, Red and Blue Force exchange was one for one, showing a relatively level playing field. In most vignettes, Blue overwhelmed Red; CAS played a significant role "Look ahead" targeting was key. Once operators had a brief training opportunity, they performed engineering support functions satisfactorily. Fidelity of representation of Red entities was good.

(2) Weaknesses included: Some Blue attrition was caused by the operator not following doctrine, especially in minefields. Red should have wiped out Blue during breaching; operators took some liberties. (Operators required additional training.)

2. Navy. The Navy has results from IFOR, Navy Surface, and Navy Air. These are discussed below.

a. IFOR focused on integrated FWA missions that required coordination among a variety of different airframes. Although little attention was focused on the capabilities of individual entities, it was still clear that there remains many (known) problems with the ModSAF models of the airframe dynamics, weapons systems, and radar. IFOR (WISSARD) FWA performed a number of mission areas with the highest degree of fidelity presently available in mission simulation via computer generated forces. Of key importance was the IFOR ability to incorporate the element of command and control from another synthetic force entity in performing the Air Warfare and CAS missions. IFOR demonstrated as close to human performance in the CAS and AAW as is presently available in simulation. The following IFOR mission areas were demonstrated during ED-1:

(1) Air-to-Air Warfare (AAW);

(2) Strike Warfare (STW);

(3) Close Air Support (CAS);

(4) Airborne Early Warning (AEW);

(5) Forward Air Control of CAS assets;

(6) Suppression of Enemy Air Defense (SEAD).

Table 6. Army IFOR ED-1 analysis items.

Capability	Result
FWA (F-14, F/A-18)	
Operations - Flight Dynamics	Unsatisfactory
Sensor - Radar, RWR	Unsatisfactory
Sensor - Vision	Satisfactory
Weapons Systems	Unsatisfactory
Weapons Systems - PGM, Bombs	Unsatisfactory
Communication (via radio)	Satisfactory
RWA	
Operations - Flight Dynamics	Unsatisfactory
Sensor - Vision	Unsatisfactory
Weapons Systems - Laser/Hellfire	Unsatisfactory
Communication (via radio)	Satisfactory

b. Navy Surface. Table 5 provides a summary of the results. At the STOW Engineering Demonstration #1 (ED-1) in October 1995, Navy SF demonstrated the major platform systems performance (not behaviors) for a CVBG composed of an Aegis Cruiser, a Guided Missile Destroyer, a Destroyer, an Aircraft Carrier, and a Logistics Ship. The major platform systems included basic operations of sensor and weapon systems, basic maneuvering operations, and damage modeling for each ship platform. The weapons systems included a DIS-capable OS, being provided by Naval Aviation Warfare Center-Aircraft Division (NAWC-AD), for high fidelity flyout of the missiles launched by NSF. In conjunction with the CVBG, there was an Amphibious Task Force (ATF) composed of amphibious assault ships (LHD, LSD, and LPD) and landing craft (LCAC and LCU); a Mine Countermeasures Group (MCG) composed of mine hunting and sweeping platforms and entities (mine countermeasures (MCM), minehunder, coastal (MHC), floating mine, sweep gear); an Opposing Forces Surface Action Group (OPFOR SAG); and Navy Air assets flown by the Navy Air Synthetic Forces (AirSAF) developers. The ATF, MCG, and OPFOR SAG did not yet contain their own inherent systems, but were represented by the major systems already developed for the CVBG. There was an attempt to demonstrate the communications between an SH-60 on an OTH surface-to-surface engagement mission, flown by Air SF, and an NSF Aegis Cruiser. These actions were to be done automatically without operator intervention using the CFOR CCSIL, which packages its protocols into the DIS Signal PDU. This Navy CCSIL prototype is the beginning of the behavioral representation to be provided by CFOR efforts for the Navy.

c. Navy Air. Performed CVBG air operations in support of an air tasking order. Executed continuous operations involving all warfare areas with adequate levels of performance capable of supporting large campaign-level exercises. Present SF capabilities, although very basic and in some cases, marginal, provided a several orders of magnitude increase in validity of air interactions compared to present simulation systems.

3. Marine Corps. All 4 days of ED-1 were run as continuous scenarios. The MCSF integration tests were conducted using three vignettes in a procedural manner. Each procedure (see

Appendix D) consisted of setup, which included entity creation and execution of the test item (which included movement, engagement, reaction drill, and consolidation of MCSF entities). For each procedure, all observations were recorded throughout the exercise of the three vignettes. An analysis was performed from these observations. As a part of analysis, the deficiencies were identified and reported as a Problem/Enhancement Change Request. The results of analysis were rated as follows:

a. Fleet end-user acceptance;

b. STOW 97 acceptance;

c. ED-1 acceptance;

d. Marginal ED-1 acceptance;

e. Not acceptable.

A summary of the results is provided in table 7. The test procedures were performed by utilizing both the MCSF PVD graphical user interface as well as voice commands. The Command-Talk voice commands were about 90% reliable in performing the task. By utilizing MCSF physical models (AAVs, LAVs, etc.) and behavioral models (cover and conceal, embark/debark, direct/indirect suppressive fire, and indirect fire), MCSF performed movement to contact at company level as well as platoon daylight attack with reasonable fidelity that satisfied the MCSF ED-1 goals.

Table 7. Marine Corps SF ED-1 analysis items.

Capability	Result
Individual Combatants	
Rifle platoon	Marginal ED-1 acceptance
Rifle squad	ED-1 acceptance
60-mm mortar squad	ED-1 acceptance
M240 machine gun squad	Marginal ED-1 acceptance
Assault team commanded by a platoon commander	ED-1 acceptance
Armor	
M1A1 tank platoon	ED-1 acceptance
Light Armored Reconnaissance (LAR) section	ED-1 acceptance
LAR-M (mortar) section	ED-1 acceptance
LAR-AT (Anti-Tank) section	ED-1 acceptance
Mechanized	
AAV platoon	ED-1 acceptance
LVT-C7 with chase	ED-1 acceptance
TOW CAAT teams	ED-1 acceptance
TOW section	ED-1 acceptance
LVT-R7	ED-1 acceptance

Table 7. Marine Corps SF ED-1 analysis items. (Continued)

Capability	Result
Individual Combatants	
Air	
CH-53	Marginal ED-1 acceptance
CH-46	Marginal ED-1 acceptance
AH-1	ED-1 Acceptance
AV8B	Marginal ED-1 acceptance

4. Air Force. During the STOW Engineering Demonstration #1 (ED-1) in October 1995, AFSF demonstrated the A-10, F-16C, and FAC in the CAS role, and the F-16C in the AI role. The A-10 and F-16C flew the correct airspeed and altitude during ingress and egress, but airspeed changed to 292 kn during the attack phase. It was learned that a separate instruction was used for attack speed in the attack command, and this was changed to reflect the aircraft's route speed. Later evaluation showed that changes to the attack command corrected the airspeed problem. The F-16Cs tasked to fly low level at 500 ft and 480 Kn crashed into the ground on several occasions. A-10s flying at 500 ft and 250 Kn did not experience the same problem. When the F-16Cs were flown using "contour flying," the F-16Cs did not crash. LADS investigated the problem and found that "low-level" and "nap-of-the-earth" flying methods use the same algorithm that samples the terrain skin at intervals that are too far between for hilly terrain and the fast airspeed of the F-16C. Both aircraft had difficulty acquiring targets. Most of the Initial Point to target runs resulted in the aircraft overflying the target because it did not see the target prior to reaching it. This was mostly due to the low attack profile and the fact that the targets were dug in behind the terrain. Attack altitude was raised 250 ft but this was not enough to significantly increase target acquisition. LADS looked into the visual sensor parameters and increased the field-of-view. More targets were seen after this, but there were still problems in hilly terrain. The visual model is one of several sensor models to be reworked by the ModSAF community. Future evaluations will be deferred until the sensor models are reworked. The weapons sever was not used by AFSF. The AMG-65 Maverick employed by the A-10 and F-16C often hit short of the target. The cause could not be determined, and evaluation was not completed because we plan to transition to the weapons server for missile support, including the Maverick. However, when hits did occur, damage to tanks was low and no kills could be made against NRaD vehicles. The Maverick should have a higher probability of kill (Pk) when hits occur. Since the target determines the amount of damage, the target damage model for tanks and vehicles should be reviewed. The F-16 in the AI role successfully demonstrated that it could deliver bombs on a set of coordinates or be tasked to attack OPFOR tanks, 16 using their threat assessment and target acquisition process.

3.2.1.2 Synthetic Environment. The following paragraphs describe SE results from the SE perspective. IFOR reported the synthetic environment (smoke, etc.) had no effect on IFOR entities or behavior. Two scenarios were demonstrated by SE from TEC over the AAI/ATDNet in an unclassified status for Day 1 of ED-1. There were five sites in addition to TEC that participated or viewed these scenarios: NRaD, NRL, IDA, ARL:UT, and DARPA. This demonstration sequence was a deviation from the planned demonstrations in that the network required more work to prepare it for the high entity counts. The purpose of the first scenario was to showcase the many features

introduced by SE to the STOW program, and correctly visualize these events using ModStealth. ModStealth is a RITN interface between ModSAF and a CIG. For ED-1, the CIG used throughout was VistaWorks. Other CIGs are expected to be connected to ModStealth to compare and analyze the strengths and weakness of each platform. Overall, the first day of ED-1 was considered highly successful by demonstrating the work introduced by SE to the STOW community and interfacing with all the outlying sites participating in the demonstration using the new RITN code.

1. The first scenario consisted of four vignettes:

   a. Breaching exercises, examples of pre-emplaced dynamic terrain objects, flares, and smoke; visualization of weather events

   b. Weather impacts on entity behaviors;

   c. Survivability positions;

   d. Destruction of pre-emplaced dynamic terrain objects.

   TEC served as the weather master for this scenario and initiated all the events that were observed by the other sites. Tables 8 through 11 show the individual events and results during each vignette of the first scenario.

Table 8. First scenario, first vignette.

Event	Results
Time of day	Highly successful. The visual rendering of discrete time changes from pre-dawn to the afternoon was correct.
Signal flares	Highly successful. The three colors were visible: red, green, and white. The visual rendering in the pre-dawn hours was correct.
Illumination flares	Highly successful. The three colors were visible: red, green, and white. The visual rendering in the pre-dawn hours was correct.
Concealment smoke	Highly successful. A barrage of white phosphorus smoke was fired on the enemy side of the anti-tank ditch to conceal the location and movement of Blue Forces. The visual rendering in daylight was correct.
Signal smoke	Highly successful. The four colors were visible: red, green, yellow, and violet. The visual rendering in daylight was correct.
Minefield breaching, and battlefield smoke	Highly successful. A Bradley fighting vehicle was set on a track to show the existence of the minefield, and battlefield smoke was shown as a result of a catastrophic kill. The Grizzly was used to breach the minefield and mark the lane. The AVLB was used to transit the minefield via the marked lane.
Destruction of concertina wire	Highly successful. Pre-emplaced concertina wire was correctly visualized by all sites. The wire was blown in the vicinity where the AVLB was to lay its bridge.

Table 8. First scenario, first vignette. (Continued)

Event	Results
Anti-tank breaching	Highly successful. The anti-tank ditch was correctly visualized by all sites. An AVLB was used to breach the anti-tank ditch. After the bridge was detached from the AVLB, the AVLB successfully crossed the bridge.
Simulation of a dust storm	Highly successful. The weather condition was reset from rural condition with 60-km visibility, to a dust storm. The visual rendering was correct, showing the restricted visibility across the terrain.
Simulation of a rain storm	Highly successful. The weather condition was reset from a dust storm to several incremental changes in rain intensities. The visual rendering was correct, showing the restricted visibility across the terrain as the rain intensities increased, then decreased.
Simulation of a wind shift and change in wind speed	Highly successful. The wind direction was shifted and the wind speed increased. The visual rendering was correct, showing the plumes from the concealment smoke and battlefield smoke shifting direction and flattening out as the wind speed increased.
Simulation of haze	Highly successful. The weather condition was reset from rainy conditions with restricted visibility to a rural hazy condition with 5-km visibility. The visual rendering was correct, showing the restricted visibility across the terrain.

Table 9. First scenario, second vignette.

Event	Results
Time of day and weather state	Highly successful. The weather condition was set to a rural hazy condition with 5-km visibility in the afternoon hours. The visual rendering was correct, showing the restricted visibility across the terrain.
Platoon of T72s set 1 km from a platoon of M1s	Highly successful. The firing permission for each platoon was set to hold. TEC used the unit editor to confirm that each of the vehicles could see the opposing force. No firing took place.
Simulation of a fog affecting tank behaviors	Highly successful. The weather condition was reset to a foggy condition with 0.2-km visibility. The visual rendering was correct, showing the restricted visibility across the terrain. After about 30 sec, none of the vehicles could sense the location of the opposing force. The firing permission of both platoons was set to free and no battle engagement between them occurred.
Simulation of unrestricted visibility	Highly successful. The weather condition was reset to a rural condition with 60-km visibility. The visual rendering was correct, showing the unrestricted visibility across the terrain. After about 30 sec, the vehicles could sense the location of the opposing force, and they engaged in battle.

Table 10. First scenario, third vignette.

Event	Results
Time of Day and weather state	Highly successful. The weather condition was set to a rural condition with 60-km visibility in the afternoon hours. The visual rendering was correct, showing unrestricted visibility across the terrain.
Two T72s set near a survivability position	Highly successful. The survivability position is a pre-emplaced dynamic terrain object. One of the two T72s was given a move order along a path that led the tank into the correct position within the dugout. The other tank was ordered to move along side.
Battle engagement with M1s.	Highly Successful. A platoon of M1s were ordered to travel cross country to engage the T72s in battle. There were several catastrophic kills, and battlefield smoke ensued from the burning vehicles.

Table 11. First scenario, fourth vignette.

Event	Results
Time of Day and weather state	Highly successful. The weather condition was set to a rural condition with 60-km visibility in the afternoon hours, showing unrestricted visibility across the terrain.
Two M1s positioned on a road in the midst of the buildings	Highly successful. The buildings are pre-emplaced dynamic terrain objects that are destroyable. Two tanks were placed on a road in the midst of these multistate objects. The visual rendering was correct.
Detail of the buildings	Highly successful. Zooming in on the buildings revealed the detail of the buildings, including door knobs and drapes, and detailed siding and roofing. The visual rendering was correct.
Destruction of the buildings	Highly successful. The M1s were ordered to perform a road march through the town. As they moved from the buildings, each of the five buildings were destroyed using 500-pound bombs from the artillery editor. Each building that was destroyed exhibited a fire and detailed debris from the destruction. The visual rendering was correct.

2. The second scenario, called the Samarian Trench, was to integrate many of the features that SE introduced to STOW, and to demonstrate the SE work in a distributed environment. This scenario was also modeled after a previous live exercise at the National Training Center (NTC). The results of this scenario were highly successful, though there was one notable exception that has been corrected. During the scenario, after the AVLB bridges were successfully laid across the anti-tank ditch, there were a number of vehicles that tracked directly toward the anti-tank ditch and fell into the ditch, rather than correctly laying a route to the other side of the ditch via the AVLB bridges. Several other vehicles did make the correct route across the bridges and successfully crossed the anti-tank ditch. A patch for ModSAF to correct this routing problem was made available the morning of the exercise, but a decision was made at TEC not to make the change. This last-minute patch was not tested over the net, and it was not

known whether there would be any other ill effects on the program by making this change. This patch has since been tested, and the scenario now works properly.

3. The Samarian Trench scenario was divided into four segments:
   a. Breaching force;
   b. Assault force;
   c. Overwatch force;
   d. Opposing force.

   TEC was the weather master for this scenario, and controlled the breaching force. NRaD controlled the opposing forces, IDA controlled the overwatch forces, and ARL:UT controlled the assault forces. Table 12 shows the individual events during the course of the Samarian Trench Scenario.

Table 12. Second scenario, the Samarian Trench.

Event	Results
Time of day	Highly successful. The visual rendering of the afternoon was correct.
Signal smoke initiating behaviors	Highly successful. Red and green signal smoke was used to initiate the breaching force's missions. The visual rendering of the signal smoke in daylight was correct.
Concealment smoke	Highly successful. A barrage of white phosphorus smoke was fired on the enemy side of the anti-tank ditch to conceal the location and movement of Blue Forces. The visual rendering in daylight was correct.
Minefield breaching	Highly successful. Two Grizzlies were used to breach the minefield, and no lane markers were used. The Grizzlies were followed by AVLBs, and later by other Grizzlies and the assault forces. One of the AVLBs did encounter a mine and suffered a catastrophic kill. This illustrates, that despite the Grizzly clearing a lane through the mine field, there is a measure of failure that is taken into account within ModSAF.
Anti-tank breaching	Highly successful. The anti-tank ditch was correctly visualized by all sites. An AVLB that successfully crossed the minefield was used to breach the anti-tank ditch. After the bridge was detached from the AVLB, the AVLB moved to the side of the bridge to allow the follow-on Grizzlies and assault force to move over the bridge.
Simulation of an advancing squall line	Highly successful. The weather condition was reset from rural condition with 60-km visibility, to a dust storm, to simulate the approach of a squall line. The visual rendering was correct, showing the restricted visibility across the terrain.
Simulation of a squall line with rain	Highly successful. The weather condition was reset from a dust storm to several incremental changes in rain intensities, simulating the passage of the squall line. The visual rendering was correct, showing the restricted visibility across the terrain as the rain intensities increased, then decreased.

Table 12. Second scenario, the Samarian Trench. (Continued)

Event	Results
Simulation of a squall line passage with fog	Highly successful. The weather condition was reset from rainy conditions with restricted visibility, to fog with 0.2-km visibility, simulating restricted visibility behind the squall, and in advance of a front. The visual rendering was correct, showing the restricted visibility across the terrain.
Simulation of unrestricted visibility and a wind shift and change in wind speed after frontal passage	Highly successful. The weather condition was reset from foggy conditions with restricted visibility, to a rural condition with 60-km visibility. The visual rendering was correct, showing the unrestricted visibility across the terrain. The wind direction was shifted and the wind speed increased. The visual rendering was correct, showing the plumes from the concealment smoke and battlefield smoke shifting direction, and flattening out as the wind speed was increased.
Passage of the assault forces through adverse terrain objects	Successful. Some of the assault forces managed to correctly route their tracks over the AVLB bridges, and through the minefields, others fell into the anti-tank ditch and were disabled. As a result, the anti-tank ditch proved to be a formidable impediment to the Blue Force's advancement.
Battle engagement between Blue and Red Forces	Successful. The Blue Forces that managed to cross the anti-tank ditch did engage in battle with the Red Forces with some success. Both tanks and dismounted infantry on the opposing force were engaged with the Blue Forces. Because of the failure of several Blue Force tanks not routing around the anti-tank ditch properly, the number of tanks left to engage the Red Forces were drastically reduced.

3.2.2 Behaviors

The following subparagraphs are the behaviors observed for each of the technology areas.

3.2.2.1 Army. The behaviors for the Army are presented separately as CFOR, IFOR, and Army.

1. Command Forces (CFOR) are virtual military decision makers and are being developed to provide a Command and Control (C^2) capability within the DARPA Synthetic Forces Program to support the STOW 97. CFOR will interact (exchange information) hierarchically through a CCSIL that will represent the C^2 information exchange. The Command Entity (CE) demonstrated in ED-1 consisted of an Army Company Team Commander developed by Science Applications International Corporation (SAIC). Also demonstrated was the Army Forward Observer (FO) developed by Applied Research Laboratories at the University of Texas. Although the FO is not considered a CE, it is being developed under the CFOR Program to provide the underlying capabilities to support other fire support CEs (e.g., FIST, Bn FSE). Hughes Research Laboratories (HRL) was originally scheduled to participate in ED-1, but a decision was made before ED-1 to have them participate in a later demonstration in December due to their development efforts not being at the level required for ED-1 participation. The following paragraphs summarize the objectives and results of ED-1. A detailed description of the results and problems encountered is provided below.

   a. CFOR Objectives. The objectives of the CFOR Program during ED-1 were to demonstrate the following:

(1) Two Army Company Team Commanders conducting a virtual Field Training Exercise (vFTX) in Attack scenarios;

(2) An FO acquiring and evaluating targets that come into its field of regard;

(3) Reasonable behavior on the part of the Company Team Commander from both a planning and reactive standpoint as METT-T factors are varied;

(4) The ability to send and receive the proper CCSIL messages.

b. CFOR Measures of Success. The primary measure of success for the CFOR Program was for the Company Team Commander's and FO's behaviors to be deemed reasonable within the constraints of ModSAF by SMEs. Behavior for a vFTX Attack mission must be reasonable from both a planning and reactive standpoint. Mission, Enemy, Terrain, Troops available, and Time (METT-T) factors will influence and prompt the Commander to evaluate his situation and possibly initiate a state change. The scenario for the FO was designed to be more simplistic in nature and demonstrate only reactive behavior.

c. Company Team Commander Analysis. Overall, the participation of CFOR in ED-1 was a success. ED-1 was the first opportunity for the CFOR team to demonstrate CFOR development to the STOW community. During ED-1, the CFOR team successfully demonstrated two CFOR virtual company/team commanders (SAIC software) operating in a tactical environment alongside an operator-controlled ModSAF company in a virtual training exercise. The CFOR company commanders received a task force order, parsed the order to identify areas relevant to their respective company, conducted mission analysis (to include METT-T), and developed courses of action that they formatted into company-level CCSIL orders. They then sent these orders to the task force commander (simulating a briefback process) for approval. Once the task force commander approved the company orders, the CFOR companies executed these plans. During execution, the CFOR companies reacted to unexpected enemy contact. The SAIC CE code generates both company- and platoon-level reactions to unexpected enemy contact based upon the size, etc., of the enemy force (using a table in the "Actions On Contact" module of the CE code). During ED-1, the entire company would execute the new plan generated by the Company Commander when an unexpected enemy was contacted. After ED-1 it was determined that there was a problem in the CE code that decides which type of actions on contact to perform, thereby causing the entire company to be tasked to perform the actions on contact every time, rather than generating platoon-level reactions when required. Once this contact was completed, the company team went back to complete the original plan from the point the unexpected contact occurred. The two CFOR companies required little operator intervention once the battalion order was issued. There were incidents when the CCSIL_SAF vehicles ran into unexpected terrain (wadi) that caused movement problems for them. Operator intervention was required to move the vehicles to the other side of the terrain feature. This same problem was initially encountered by the ModSAF unit and was fixed after TEC provided a patch to the ModSAF software. However, the CFOR team was unable to incorporate the fix into CCSIL_SAF due to the difficulty of ftping files and compiling software in the IDA classified environment. The CFOR virtual commander was able to demonstrate reasonable behavior both in planning and execution during ED-1 as deemed by Scott Carey, the Logicon RDA SME witnessing the ED-1 demonstration. Refinement is needed to improve behavior; however, the plans generated were acceptable, given the METT-T encountered. The plans generated and actions taken were acceptable under the circumstances. Overall, the behavior of the CFOR-directed

companies would have looked better had it not been for some flawed behaviors inherent to ModSAF. The SAIC Company Team Commander was able to demonstrate the ability to send and receive various CCSIL messages. The following were demonstrated: the processing of a Bn OPORD, the creation of a subsequent Co OPORD, the entire briefback process, the request of a SITREP from platoons, the process of incoming SITREPs, and the processing of new Co OPORD/FRAGO when unexpected enemy contact or obstacles would result in a situation where a new plan was required.

d. Problem Areas Identified. The following items provide an overview of problems encountered and the status of actions taken.

(1) Some ModSAF task frames lack clearly defined end points, therefore, the CCSIL_SAF unit required prodding from the ModSAF GUI to move to the next task. This problem is currently being addressed by MITRE. However, these problems are also being provided to STRICOM for future fixes/enhancements in ModSAF.

(2) When the unit completed its reaction to unexpected contact, the company commander would do a replan from the "task" it was performing when it was interrupted. The commander does not do the replan from the geographic place where interrupted, but rather the ARTEP task where interrupted. This resulted in a situation where the company commander, after reacting to an enemy before in the attack position, tried to go back to the attack position. This problem is being addressed and will be further evaluated in future vFTX testing.

(3) The functionality that allows the platoons to develop the situation until they get to the point where company-level action is required was incorporated into the SAIC code. However, the bug mentioned above prevented it from being invoked.

(4) ModSAF vehicles were unable to traverse the wadis due to the steep slopes on their edges. Both companies were frequently getting stuck and had to be manually moved to another location before the remaining vehicles could continue with the mission provided to them by their commander. As there were several such problematic wadis in the third Attack vignette, a decision was made to demonstrate the first and second vignettes, and then return to the first vignette with the addition of more unexpected enemy vehicles. Just prior to Day 4 of ED-1, TEC provided a fix to the ED-1 version of ModSAF to help the vehicles traverse the wadis. However, as the CFOR Program uses CCSIL_SAF, and integration and development tools were not readily available at IDA, the CFOR team was unable to incorporate this fix before ED-1.

(5) Multiple CCSIL_SAF back-ends for the two CFOR companies would cause one of the back-ends to go down, in turn, causing the CE to go down. The ED-1 vignettes were eventually run with the companies running on only one CCSIL_SAF back-end. The CFOR team has been unable to duplicate this problem at MITRE, but will try to duplicate it again during the December demonstration of Hughes Research Laboratories' CEs at IDA.

(6) A memory overwrite problem in CCSIL_SAF was caused by allowing the CE to generate routes with more than 109 data points. This caused the Persistent Object (PO) packet size limit of 1599 bytes to be exceeded. A workaround was developed for ED-1. The real solution to this problem needs further investigation by the CFOR team.

(7) An additional memory overwrite problem in CCSIL_SAF was caused by libgenradio. Each Signal PDU contains an application-specific ID that serves as an identifier for the contents of the data portion of the PDU. ModSAF 1.5.1 had a bug in libgenradio that caused it to copy a fixed amount of data from each Signal PDU into memory before checking the ID to determine how much data needed copying. This caused problems when the Signal PDU contained a CCSIL message having less data than the fixed amount being copied by libgenradio. This bug has been fixed in ModSAF 2.0, but another problem was introduced. The application-specific ID reserved for CCSIL messages (= 1) is now apparently also used for other purposes in ModSAF. This problem was not resolved.

e. FO Analysis. From the Fire Support point-of-view, the FO's vignette, although not complex, was considered successful. ARL:UT demonstrated the ability to provide planned enhancements and a reimplemenation of rulesets from their existing FSATS simulation to produce a working When Ready Fire for Effect mission thread. The FO could identify enemy vehicle/forces entering its field-of-view, and generate a "when ready fire for effect: fire request message." The FO included in the exercise was able to use the visual library features of ModSAF to acquire the targets that came within its field of regard in the appropriate (expected) manner. Terrain masking was taken into account correctly. The FO also correctly evaluated each target presented for proper attackability criteria, and produced the routine fire requests anticipated (future options will eventually include immediate fire requests and intelligence messages). The CCSIL (When Ready Fire For Effect) Fire Request messages sent by the FO were generated properly. The messages were picked up not only by the monitor running on the local ModSAF session, but were also picked up by the CFOR monitor running on the network to support the Ground Maneuver vignettes. The FO's vignette took place in the NW corner of the GMB to avoid confusion with the ground maneuver, dismounted infantry, and RWA vignettes. Unfortunately, the ModStealth terrain in this area was not viable and, therefore, the realism of the target acquisition could not be viewed with the Stealth. Because it was undesirable to have any of the other entities unexpectedly engage the target that was generated for the FO vignette, and because the target acquisition capabilities could be viewed on the ModSAF PVD, the FO vignette was not moved to another location.

2. IFOR. At the multivehicle behavior level, the focus in ED-1 was on teams and companies of AH-64 Apache attack helicopters. The specific list of relevant behaviors can be found as part of the overall list of behavioral capabilities outlined in sections 5 and 6. The results of behavioral testing can be summarized as follows:

a. Successfully completed all five planned vignettes, while varying the mission (armed reconnaissance and attack), company and team structure, terrain, formation, and target prioritization. These vignettes were generally consistent with, but not in coordination with, the overall Army scenario.

b. Demonstrated some behaviors that were unexpected (such as an armed reconnaissance mission, variations in team and company sizes, robustness of formation flying under death of company members, and variations in target prioritization).

c. Additional KA is required to help determine better general criteria for such things as the height of a popup attack, when to terminate a popup before reaching the planned height, and when to leave a battle position and return to the FARP.

d. Successfully demonstrated the beginnings of an RWA scout capability that can perform reconnaissance and provide information to attack helicopters for use in performing their missions. One problem that showed up in scout behavior was that the scouts would never engage targets under any circumstances during attack missions. That they should actually do so was information missing from the pre-ED-1 KA.

e. Although it was explicitly not a focus of ED-1, most of the development was planned for after ED-1, it was clear that there were significant deficiencies in C^3. Some capabilities in this area were observed (for example, the scouting activity), but considerable behavioral and infrastructural work is still necessary here. One of the most significant problems exhibited in ED-1 was that the RWA companies could not adjust appropriately to the death of a key player (either the nominal commander or a key scout who was to provide critical information to the rest of the company), though they could adjust to the death of other less-critical group members. A related problem was that attack entities did not communicate about what they observed so as to fill in gaps in each other's understanding of the situation. This occasionally resulted in inappropriate behavior by RWA, unaware of things of that they should have been aware.

f. Also not planned for ED-1, the absence of a remote designation for Hellfires (missiles) and traveling bounding overwatch was definitely noticeable in the behavior. These behaviors were (and are) planned for later.

3. Army. The following items are presented for behaviors in terms of Strengths and Weaknesses. SE is also included here.

a. Strengths

(1) Generally good representation of the battlefield;

(2) Placement of forces adequate and realistic;

(3) New systems operated well after operator training (AVLB, Grizzley, minefield breaching);

(4) Desert/SW United States terrain and textures were generally adequate;

(5) SE was generally adequate for most applications in this scenario;

(6) Good depiction of smoke, fog, vehicle dust, darkness, and rain;

(7) Dust clouds from M1s were obvious;

(8) Formations of M1s reacted to smoke properly (slowed and closed formation) after smoke M1s resumed speed

(9) Smoke was observed and M1s reacted properly to an ATGM attack.

b. Weaknesses

(1) Red should have wiped out Blue;

(2) Some polygon problems (reverse slope hillsides, etc.), some coarseness in terrain;

(3) Two different Terrain Data Bases used and not verified prior;

(4) Stealth was incompatible with Data Bases; jitters, vertical blue lines in some views;

(5) Operators often selected inappropriate contour line resolution and got in trouble as a result;

(6) Wide variation in wire and ditch visualization;

(7) AVLB needed more work to eliminate its sensitivity during operator inputs;

(8) More nighttime scenarios need to be played, along with more rain.

3.2.2.2 Navy. This paragraph describes the Navy portion of behaviors. Navy behaviors were separated into IFOR, Navy Surface, and Navy AirSAF behaviors.

1. IFOR. The following behaviors were observed by IFOR.

   a. The planes successfully completed all three missions (Defensive Air, Close Air Support, and Combined Strike). Each of these missions included a variety of capabilities including: running and circling rendezvous; airborne retanking; communication and coordination between control entities (E-2C, FAC(A), TACC, TAD) and fighter and attack planes; section-level and division-level flying and attacks; use of PGMs, HARMs, and dumb bombs; and 2v2 BVR air-to-air. This was the IFOR primary goal for ED-1, and it was achieved.

   b. The planes could respond to many unexpected interactions in the scenarios without failure. For example, the IFOR CAS mission was disrupted by an unexpected attack from enemy fighters. This was not expected from the scenario. (Some unexpected interactions did result in nondoctrine behavior from the agents, such as when a division was attacked by 10 planes. However, tactics have not yet been encoded for 4vN engagements, so this was not a surprise.)

   c. The terminal targeting of many of the IFOR weapons was adversely affected by the increased CPU load (this was the only negative effect of the increased load on the CPU because of the network). Although the IFOR planes could deliver their ordnance, more than once they were unable to get a targeting solution on their first run at a target. Code has since been optimized to avoid this in the future.

   d. During air-to-air intercepts using the E-2C, the E-2C and the fighters need to switch to close-control for planes that have committed to an attack. It was discovered that the attacking planes would get distracted by broadcast control messages.

2. Navy Surface. During STOW ED-1, Navy SF demonstrated the major platform systems performance (not specific behaviors) for a CVBG composed of an Aegis Cruiser (CG-59), a Guided Missile Destroyer (DDG-51), a Destroyer (DD-963), an Aircraft Carrier (CVN-68), and a Logistics Ship (AOE-6). The major platform systems included basic operations of sensor and weapon systems, basic maneuvering operations, and damage modeling for each ship platform. The weapons systems included a DIS-capable OS, provided by NAWC-AD for high fidelity flyout of the missiles launched by Navy SF. In conjunction with the CVBG, there was an ATF composed of amphibious assault ships (LHD, LSD, and LPD) and landing craft (LCAC and LCU); a MCG composed of mine hunting and sweeping platforms and entities (MCM, MHC, floating mine, sweep gear); an OPFOR SAG; and Navy Air assets flown by the Air SF developers (WISSARD). The ATF, MCG, and OPFOR SAG did not yet contain their own inherent systems, but were represented by the major systems already developed for the CVBG. There was an attempt to demonstrate the communications between an SH-60 on an OTH surface-to-surface engagement mission, flown by Air SF, and a Navy SF Aegis Cruiser. These actions were to be done automatically without operator intervention, using the CFOR

CCSIL, which packages its protocols into the DIS Signal PDU. This Navy CCSIL prototype is the beginning of the behavioral representation to be provided by Navy CFOR efforts.

3. Navy AirSAF. The following behaviors pertain to WISSARD and the Navy AirSAF.

   a. Performed an OTH targeting mission utilizing an SH-60 from WISSARD and a USN Aegis cruiser from NRaD, communicating through CCSIL-generated messages. The result was partially sucessful. This event could only occur during very low network traffic periods and was successful primarily only one way. The WISSARD SH-60 successfully received the mission brief; however, the Surface Contact Report caused the Navy SF to crash at NRaD due to incorrect fields in the received PDU.

   b. Utilized a remote OS application located at a geographically distant site to support missile flyouts initiated by another site. The result was partially successful. A Maverick air-to-ground missile launched from a WISSARD F/A-18 was successfully flown out by an OS from NRaD. This missile scored a hit on the target it was employed against with apparent lethal damage. Further testing for different weapons was not performed due to time and hardware constraints at both sites.

   c. Numerous OPFOR aircraft from WISSARD attempted to attack Navy surface ships generated and under the control of NRaD. The result was unsuccessful. With the extremely high lethality of the missiles and Close in Weapons System (CIWS) on the ships, coupled with the very limited weapons suite and nonexistent defensive behavior of the OPFOR aircraft, very few attackers ever reached the Blue ships. During many of these engagements, it appeared weapons from the ships were fired at ranges greater than what would be possible with actual hardware. In the few instances where OPFOR aircraft actually reached Blue ships, the aircraft failed to employ weapons despite free permission and acquisition of the target by the attacker. The cause of this anomaly could not be determined.

   d. Embark Individual Combatants generated by NRaD onto helicopters generated by WISSARD and transport them via a route to a different geographic location then disembark. The result was partially successful. ICs embarked into the helicopters and were successfully disembarked at the prescribed location. Several problems that were observed were the parceling of ICs in a location other than the helo during transport and the erratic behavior of RWA when in the proximity of large numbers of entities such as ground vehicles and ICs. In the first case. the movement of the IC group to a different area of the TDB resulted in an unintended engagement between Red and Blue Forces. If this mechanism is used, a better method to hide and shield these “in-limbo” entities from other entities should be used. The inability of the RWA to process large numbers of entities when in the low-altitude environment caused highly erratic behavior, and crashes of entities when unable to quickly and accurately process all the information being presented to it. This also occurred during RWA operations with IFOR agents; however, the resulting outcomes did not appear to be quite as catastrophic.

   e. Fixed Wing and Rotary Wing aircraft (IFOR and ModSAF) generated at WISSARD executed air-to-surface attacks on ground entities generated by numerous sites with varying results. The result was that the interactions appeared to occur properly with detection and attack of targets executed, as expected. The one anomaly in these interactions that was very evident was the probability of hit and probability of kill percentages that were occurring. It appeared an inordinate number of hits would occur on a specific target

without incurring any damage. Also, several times during high network load periods, valid shots appeared to be taken that would not guide to target hits despite the lack of countermeasures or defensive maneuvering. In summary, from a historical perspective it appeared that with a valid launch, the probability of a hit or kill was much lower than expected.

3.2.2.3 Marine Corps. When performing Movement to Contact (MTC) at company level, the following MCSF behaviors were observed. These behaviors were embark/debark and general attachment. In addition to these behaviors, the general ModSAF behaviors such as move, attack, and react to fire were observed. The execution of these behaviors were acceptable, but because some of the implementation (in ModSAF) lacked robustness, they were rated as marginal ED-1 acceptance. These problems were identified and reported (see Appendix A PCRs). For example, embark and debark behavior worked well, but a PCR was written because embark/debark only worked when the task was performed in real time (hence embark/debark did not work in a saved scenario). When performing a Daylight Attack at platoon level, the following MCSF behaviors were observed. These behaviors were as follows:

1. IC basic formation;
2. IC basic movement;
3. IC coordinated movement;
4. IC terminal functions;
5. Tactical use of terrain;
6. Single envelopment attack;
7. Usage of signal flares;
8. Direct/indirect suppressive fire.

Similar problems existed for Daylight Attack for platoon level as with MTC. For example, single envelopment attack worked well under pocket SAF configuration, but under distributive environment, the station keeping and formation functionality were sometimes erratic. The analysis results were rated as in paragraph 3.2.1.1, and are described as follows:

1. IC Basic Formation - ED-1 acceptance;
2. IC Basic Movement - ED-1 acceptance;
3. IC Coordinated Movement - Marginal ED-1 acceptance;
4. IC Terminal Functions - Marginal ED-1 acceptance;
5. Tactical Use of Terrain - Marginal ED-1 acceptance;
6. Rifle Squad/Platoon Single Envelopment Attack - Marginal ED-1 acceptance;
7. Embark/Debark Capability - Marginal ED-1 acceptance;
8. General Attachment Capabilities - ED-1 acceptance;
9. Usage of Signal Flares - Marginal ED-1 acceptance;
10. Reaction to Suppressive Fire - Not acceptable (PCR generated);

11. Direct Suppressive Fire - Marginal ED-1 acceptance;
12. Indirect Suppressive Fire - Marginal ED-1 acceptance.

3.2.2.4 Air Force. The Forward Air Controller (FAC) worked very well. The FAC passed all target information properly to the CAS aircraft via radio transmission PDUs. The only problem noted was when an aircraft returned to the contact point and communicated with the FAC, the aircraft. The returning aircraft would take the tasking and then decide if it could fly the mission. If the aircraft decided it could not fly the mission due to lack of weapons, low fuel, or on-station time expired, the tasking was not returned to the FAC. The CAS aircraft must decide if they can fly the tasking before taking the FAC tasking. Also, the FAC must be reworked to allow more dynamic changes to the tasking after the aircraft have accepted the tasking, such as having the aircraft abort the mission anytime after the contact point up to weapons release. Aircraft correctly returned to home base upon reaching end of on-station time. However, aircraft decisions to return to home base (due to BINGO fuel or lack of weapons) could not be tested. CAS aircraft would attack the closest threat and not necessarily the target assigned by the FAC. When CAS targets are assigned by the FAC, CAS aircraft should not attack other targets unless in self defense or within the Rules Of Engagement (ROE) given by the FAC. Currently, there are no ROEs given by the FAC. Both the A-10 and the F-16 threat assessment needs work. However, no solution was implemented because behaviors will be done by SOAR, and not Task Frames, in the future. The same is true of the problems noted with formation flying by the A-10 and F-16C.

3.2.3 Synthetic Forces Interoperability

Synthetic Forces Interoperability (SFI) was conducted from the beginning of SSIT #4 through ED-1 as the Test Continuum.

3.2.3.1 Army. The Army SFI has been reported as CFOR, IFOR, and then as STRICOM's Army SF as shown below.

1. CFOR. Joint interaction between CFOR and other SF was achieved. However, planning was done at the human level only, resulting in interactions limited to the battalion commander (Scott Carey) requesting CAS missions from the Air Force. Additional enemy vehicles were added near the two Company Team Commander's objectives to avoid having the Air Force destroy all of the enemy that the CFOR-directed companies would encounter.
2. IFOR. This section details all of the interactions between IFOR FWA and RWA and other forces. It includes overviews of both FWA and RWA missions, the interactions, and summaries.
    a. FWA. FWA scenarios all involved Navy Air. The specific airframes demonstrated were F/A-18 (Hornet), F-14D (Tomcat), E-2C, A-10 (FAC(A)), and KC-10 (tanker). All Navy Air was provided by Soar/IFOR agents. OPFOR units (both ground and air) were controlled by ModSAF behaviors. OPFOR units were not evaluated by IFOR personnel. The entities for these scenarios (including the planned OPFOR entities) were all generated during ED-1 at the WISSARD laboratory. There were three distinct scenarios, which were then followed by an FWA summary.
        (1) Defensive Air. Defensive Air included two Blue Section BARCAP in depth with an E-2C controller and a tanker. The forward CAP was attacked by a Red sweep of MiG-29s, and the rear CAP moved forward.

(2) Close Air Support. The CAS division attacked tanks (T-72s) using PGMs. There was a division a rendezvous following take-off, then refueling with the tanker before proceeding with the attack.

(3) Combined Strike. The Combined Strike involved three sections of planes participating in a coordinated strike. The first section is a MiG-Sweep (against MiG-29s), followed by a SEAD mission (against SA-9s) and the final one a strategic attack against a bridge.

(4) FWA Summary of Interoperability. All IFOR missions were successfully completed. The damage models for entities need to be updated for the new weapons systems that are becoming available. Many of the entities attacked by IFOR do not react realistically to air-to-ground weapons (specific examples include T-72 and T-80 tanks and SA-9s). There also has to be a general process within the overall ModSAF development so that as new weapons become available, all ModSAF entities have appropriate damage models. The IFOR or E-2C did see other forces, and on the first day was overwhelmed with ground forces. This problem was fixed so that by the second day, the E-2C only saw air vehicles and was not overwhelmed. Unfortunately, there were many unexpected interactions that disrupted the IFOR missions. Red aircraft (SU-25s) attacking the fleet caused the IFOR CAS missions to abandon their missions and defend the fleet. These aircraft were generated at WISSARD. A Red ship shot down some of the IFOR fighters and an SA-2 site near one of the bombing targets distracting the IFOR SEAD mission from their original target (although they did attack the SA-2 site correctly). It is unknown if the source was the Red ship or the SA-2 site.

b. RWA. The overall RWA scenario for ED-1 involved Red ModSAF ground forces (T-72 tanks and ZSU23-4M vehicles) retreating southeast down the road, being attacked at various points by Blue IFOR RWA (AH-64 Apaches). There was no intent by IFOR to evaluate the behavior of OPFOR units. Five vignettes were scheduled varying in length from about 20 minutes to about 50 minutes. The entities for these scenarios (including the OPFOR entities) were all generated during ED-1 at the WISSARD laboratory. The scenario vignettes are provided below, followed by the RWA summary.

(1) Vignette 1. This included a Blue team of two RWA scouts and a Red platoon of tanks. The RWA scout team flies from the FARP to an observation point in combat spread formation. They spot the tanks, and after a brief first volley of missiles they fly back to the FARP.

(2) Vignette 2. This included a Blue company of two RWA teams (one of three attack, and one of two attack) and a Red platoon of three tanks and a platoon of ZSU23-4M. The RWA company flies to the battle position in staggered trail formation. The two teams take up firing positions on two sides of a hill. After a 5- to 10-minute engagement, the company flies back to the FARP.

(3) Vignette 3. Vignette 3 involved a Blue company of two RWA teams (one of one scout and two attack, and one of one attack) and a Red platoon of three tanks and a platoon of ZSU23-4M. The RWA company flies towards the battle position in trail formation. At the release point, the attack helicopters hold, while the scout pulls out ahead to the battle position. If the scout observes enemy vehicles, it retrieves the attack RWA and brings them forward to the battle position. It then relays their firing

positions and target priorities. After a 5- to 10-minute engagement, the company flies back to the FARP.

(4) Vignette 4. Vignette 4 involved a Blue team of three attack RWA and a Red platoon of three tanks and one ZSU23-4M. The team flies towards the battle position in trail formation. After a 5- to 10-minute engagement, the team flies back to the FARP.

(5) Vignette 5. The final vignette involved a Blue team of three RWA (two attack and one scout) and a Red platoon of three tanks and one ZSU23-4M. The team flies towards the battle position in trail formation. The scout breaks off at the release point and takes up a flank security position at one battle position. The attack helicopters take up their positions at a second battle position. After a 5-to 10-minute engagement by the attack helicopters, the team re-forms and flies back to the FARP.

(6) RWA summary of interoperability. Successfully completed all five vignettes, attacking the OPFOR that was available. Received some surprises from unexpected interactions with other forces. The most significant was discovering that the RWA vision "model" could be overwhelmed by a large ground force, which was discovered by flying near a Blue Marine Expeditionary Force (generated by MCSF). The helicopters got bogged down in "visual" processing, and failed to pay sufficient attention to their flying (and thus, would sometimes crash and burn). Short-term fixes were developed in time for the final day of ED-1; however, for the longer term, a better perceptual attention capability is needed. There was inadequate ModSAF weapon and behavior models that made interoperability less realistic than it might otherwise have been. For example, Hellfire hit and kill probabilities were generally way off from what would have been realistic, and did not vary appropriately as a function of the target vehicle. Hellfire missiles failed to track appropriately on their targets as the computational load got higher. Together these phenomena led the helicopters to use many more missiles than would have been realistic. Changes were made to the tables locally at various times during ED-1 to make them more realistic (based on SME and VV&A advice), but this left them still quite ad hoc. In addition, some OPFOR behavior models were unrealistic. For example, ModSAF ZSUs can acquire and fire almost immediately, rather than requiring the ~10 seconds they would if controlled by people in the real world. This changes the effectiveness of such Blue tactics as popup attacks. Also, behaviors did not exist to keep the OPFOR ZSUs and tanks together and coordinated, so, for example, the two groups often inappropriately split up with the ZSUs stopping and scrambling because they saw some Blue vehicle, while the tanks would blithely continue on their way. The RWA would sometimes fire at vehicles that already show up as dead on the PVD. This may be an issue of time lag in updating the entity-state model between the machines generating the OPFOR and the RWA, or may result from the inappropriate "gun-barrel-tracking" logic used in ModSAF hellfire missiles. It was unrealistic for the RWA to not be able to reposition themselves if the enemy was not where they were expected to be. However, this is a capability that was planned for post ED-1. Improved logic is required for dealing with situations in which enemy vehicles are perceived that are not a threat (and possibly other not yet observed vehicles that are a threat), for dealing with enemy that are out of range, and for deciding which entities within a single targeting-priority class should be targeted first. At one point, a pair of Air Force A-10s strayed into the IFOR area and were shot down by one of the OPFOR ZSUs. This altered the position of the OPFOR when it came time to engage with the IFOR

AH-64s. Other unexpected interactions generally involved the presence of Blue ground or RWA forces (from MCSF). They were successfully ignored by the IFOR RWA, but would frequently cause the OPFOR to slow down or to scramble prematurely, thus, altering the expected timing and location of the engagement.

c. Joint Scenario. In addition to these RWA and FWA results, on October 20, IFOR dynamically created a joint scenario combining both RWA and FWA (this was a synchronized rather than a coordinated joint mission). It used an existing RWA scenario, but required creation of a new FWA scenario from scratch. After approximately 90 minutes preparation, IFOR was able to successfully run the scenario. The scenario involved Blue RWA (AH-64s) and FWA (F-14s) on attack missions, Blue FWA (F-18s) on a SEAD mission, and Red ground forces (ZSUs and T-80s) that were fleeing. During the engagement, the F-18s took out one ZSU, with the AH-64s mopping up the rest of the column. The F-14s dropped dumb bombs that fell near, but did not damage the tanks.

3. Army SF. No problems noted with interoperating ModSAFs between services. There was good-to-excellent interaction, but not fully joint: Navy/USMC; Army/AF; and IFOR. Coordination with designated Air units for CAS was excellent.

3.2.3.2 Navy. There were no IT or ED-1 test objectives that specifically addressed SFI, but there were many successful Navy SF interactions as a result of DIS compatibility with other service synthetic forces observed during ED-1. NSF successfully interoperated with Army SF, CFOR, Navy SF, MCSF, and AFSF in a realistic battle scenario populated by geographically dispersed sites (NRaD, IDA, WISSARD, and JTASC). There were successful engagements between NSF ships and AFSF aircraft, and between NSF ships and MCSF tanks. There was an attempt to demonstrate a MCSF embark onto Navy SF landing craft and then debark onto shore, which was unsuccessful during ED-1. There was an unsuccessful attempt to demonstrate CCSIL message communications between an SH-60 flown by Navy AirSAF on an OTH surface-to-surface engagement mission, and a NSF Aegis Cruiser. Navy SF successfully interfaced with the OS provided by NAWC-AD, but there were problems with the OS flyout of some missiles.

3.2.3.3 Marine Corps. Navy SF required MCSF LAVs and HMMWVs to “debark” the Navy entities. Unfortunately, MCSF vignette #1 was almost completed when Navy SF LCACs and LCUs came ashore. MCSF accommodated Navy SF by “debarking” MCSF entities without any specific mission to perform. The CAS coordination was conducted via telephone, WISSARD provided AV8s as well as AH1s to help support the MCSF MTC mission. Both AV8s and AH1s provided CAS and Red Close Air Support (RCAS) effectively against the enemy Russian Armored Personnel Carrier (BMPs), but were not effective against dismounted infantry (Tube Launched, Optically Tracked, Wireguided Missile Weapon System, TOW, would destroy BMPs but would not destroy dismounted infantryman standing right next to the vehicle). In some instances, the AV8s would not fire on the BMPs when called to provide CAS. At NRaD, MCSF rifle platoon, 60-mm mortar squad, M240 machine gun squad embarked onto CH53s and CH46s that were generated from WISSARD. Once the embarked entities reached the debarking point, the rifle platoon, 60-mm mortar squad and M240 machine gun squad debarked successfully.

3.2.3.4 Air Force. There were only two interactions evaluated between SF and SE. The first was between the aircraft and OPFOR ground targets. As previously noted in paragraph 3.2.2.4, the aircraft observed and identified OPFOR entities as threats. Problems relating to acquisition, threat assessment, and target priority were due to AFSF behaviors and/or models. However, problems with

OPFOR damage as a result of hits by Mavericks is a problem with OPFOR damage assessment. The other interaction was with bombs blowing up dynamic bridges provided by the SE and causing a barrier to be placed on the bridge. Although the AFSF entity could not see the bridge, they were able to bomb a set of coordinates. If the detonation PDU was within the proper distance from the bridge, it was seen by the bridge, the bridge blew up, and the barrier was placed on the bridge.

4. RECOMMENDATIONS

Recommendations for each technology area are presented separately.

4.1 ARMY

The Army SF recommendations are presented for CFOR, then for IFOR.

4.1.1 Command Forces Recommendations

Recommendations for the CFOR program are for CFOR development to expand CFOR into other service areas and additional mission areas. Focus should be on providing interaction with other synthetic forces and combined arms operations. Additionally, more focus should be applied to the integration of CEs with the environment. This includes dynamic terrain, weather, and phenomenology effects.

4.1.2 Intelligent Forces Recommendations

For some of the scenarios, there should be more control of unexpected interactions between independent demonstrations. The interactions can disrupt the planned purpose of the demonstration (even if the interactions are realistic, that might not be the purpose of the demonstrations). This is not to argue against unplanned interactions in general (intelligent reaction to unplanned interactions is a critical capability), but in a testing environment where specific capabilities are to be demonstrated, the ability to avoid disruptive interactions is important. For example, IFOR experienced difficulty demonstrating the ability to perform CAS missions because enemy strikers were constantly attacking the fleet. IFOR ended up demonstrating the ability to break off a CAS mission, perform an intercept, and then have the surviving planes return to the CAS mission. This made it more difficult to demonstrate a complete division-level CAS mission. It might make sense to have some subpart of the demonstrations where the unplanned interactions are minimized, with later parts of the demonstrations allowing them. Having a large pool of machines available in an unclassified facility would greatly simplify our participation in future events such as ED-1.

4.1.3 STRICOM Recommendations

The following recommendations were received from STRICOM for the Army SF.

1. Aircraft need to be able to reconcile enemy (or UNKNOWN) vehicles that are not actual threats;
2. Stealth needs smoothing algorithms to better cope with high maneuver rates; aircraft, tanks, even ships jittered, especially in turns and rapidly changing states;
3. Need a better approach to tactical communication and more realistic configuration; this would supply time-tagged recorded message for analysis and will be required to evaluate the commander's behavior in various situations;
4. Need to synchronize time to all workstations and tie this into all recording and data logging. Each terminal had different time showing;
5. Need correlation between bandwidth/packet sizes and entity states and dynamics; look at improved tools to collect dynamic data;

6. Ensure that expanded force structure includes very detailed replication of fire support coordination, control, and planning function operators, systems, and channels;
7. ModSAF operators need special training as new entities and support/special purpose systems are introduced (Grizzley, AVLB, etc.).

4.2 NAVY

As previously stated, this was the first implementation of Navy Synthetic Forces in a major demonstration. While many problems were identified, the NSF project appears to be on a successful path towards STOW 97. This was demonstrated during ED-1, where Navy SF participation required integration with various other simulations at varying degrees of fidelity. NSF successfully interoperated with other service synthetic forces (with ASF, CFOR, NSF, MCSF, and AFSF) with specialized servers (Ordnance Server) using a core technology base (ModSAF) in a seamless battle space populated by geographically dispersed sites (NRaD, IDA, WISSARD, and JTASC) via intelligent communication networks.

After analyzing the data that were collected during IT and ED-1, it is clear that there are some Navy SF elements that need improvement. The CG-59 was the only hull that had all of the correct KA parameters. Where there were unavailable KA parameters for the other four hulls, the KA parameters for the CG-59 were used. The unavailable parameters for the four hulls include fuel consumption rates, acceleration and deceleration rates, cutout arcs, turning diameter distances, radar mast heights, and additional parameters for the AOE. After the unavailable KA parameters are supplied for these four hulls, UVT and IT will have to be repeated. NSF communications via CFOR CCSIL messages was unsuccessful between NRaD and WISSARD during ED-1. This will have to be fixed promptly, as it is an important step towards the integration of intelligent behavior processes through defined entity control interfaces (command entities) and will provide realistic behavioral representations of Navy command and control. The OS provided by NAWC-AD needs improvement in order to provide high-fidelity flyout of the missiles launched by NSF. During IT and ED-1 there were many recorded problems with missile flyouts from the OS. There were other problems, as previously noted, with the CIWS, NSF probability of hit tables, system loading, the ModSAF GUI, and ModStealth mapping/missing model. In order to collect radar detection range information in future exercises, it would be beneficial to have software test tools that allow collection of specific radar data. The problems discovered over the Test Continuum and ED-1 will provide much of the necessary input to improving the NSF system and help strengthen its capabilities as it progresses down the STOW 97 path.

4.3 MARINE CORPS

As the ED-1 testing was performed, it was clear that without Marine Corps CFOR, a significant amount of user interaction was required with the MCSF front-end. In addition, interoperability issues with the Navy must be worked out before testing begins, so that the interoperability test can be militarily and tactically significant.

4.4 AIR FORCE

A more detailed and formal approach to data collection and analysis should be established for future AFSF testing. Additionally, identification of testing criteria and coordination with other service SFs required for testing should be included in this planning. Scenario problems were noted when CAS aircraft overflew the corridor used by SOAR entities. AFSF entities saw SOAR OPFOR

as threats, and attacked them when they were acquired. This was corrected by changing the routes that the CAS aircraft flew, so as not to overfly the SOAR area of operations. This would have been identified earlier if the entire scenario had been run prior to 17 October. AFSF would like to run scenarios prior to demonstrations and look for unintended interactions well before the actual demonstrations. Also, AFSF would need to be aware that air entities travel over a large area and may need to overfly areas conducting other operations. This may mean unplanned interactions may occur and changes to the scenario may not be feasible. The Air Force needs to coordinate closer with the Army when planning on CAS. Since CAS is directly tied to Army operations, the Army needs to identify the times they expect CAS missions to either be on station or to be available. The scenario did not have CAS until well into the Army scenario, and it appeared the best time for CAS was earlier in the Army scenario rather than later. Coordination of the scenario was sometimes confusing when the direction was for everyone to run a specific vignette because everyone had a different number of vignettes set for different times. Network problems experienced by AFSF included freeze-up several times during the scenario. We believe this was due to the way version 2.0 handles other systems loading new scenarios. Under 2.0, when any network system loaded a new scenario, regardless if they were using the same PO data base, the AFSF system froze. Under 1.5.1, only those systems on the same PO data base would freeze. Since multiple PO data bases were used, system freeze when someone loads a new scenario was not experienced.

4.5 SYNTHETIC ENVIRONMENT

What was demonstrated was the initial thrust of introducing a synthetic environment into the synthetic battle space. SE provides a firm basis with which other weapon's models, system behaviors, and other major components introduced into the synthetic battle space can be used to measure and modify the impact of sensor platforms and performance to realistic simulated conditions. The synthetic battle space is no longer a flat-earth and blue-sky environment. It now simulates real-world conditions with real-world impacts on mission planning and the execution of orders. Much work remains ahead to further identify, build, and implement behaviors, and introduce sensor performance models that consider specific environmental conditions that can now, and will be simulated. Continued close coordination between SE and SF are required to ensure that all future work takes full advantage of the opportunities ahead to fully integrate the whole synthetic battle space into a manageable, realistic system that is useful for mission rehearsal, mission planning, and training.

5. SUPPORTING DATA

5.1 SYNTHETIC FORCES

5.1.1 Army Supporting Data

Supporting data for Army Synthetic Forces is provided in Appendix B. This appendix also includes the IFOR Problem Change Reports generated with the status of each.

5.1.2 Navy

Supporting data for Navy Synthetic Forces is provided in Appendix C.

5.1.3 Marine Corps

Supporting data for Marine Corps Synthetic Forces is provided in Appendix D.

5.1.4 Air Force

Supporting data for Air Force Synthetic Forces is provided in Appendix E.

5.2 SYNTHETIC ENVIRONMENT

N/A

6. REFERENCES

6.1 GOVERNMENT DOCUMENTS*

1. *STOW97 Advanced Concept Technology Demonstration (ACTD) Management Plan (Version 7.0).* Washington, DC: U.S. Atlantic Command, Advanced Research Projects Agency, January 13, 1995.
2. *Synthetic Theater of War (STOW) Engineering Demonstration #1, 1A Data Collection & Analysis Plan.* San Diego: Naval Command, Control, and Ocean Surveillance Center RDT&E Division (Code 441), November 15, 1995.
3. *Synthetic Theater of War (STOW) Engineering Demonstration #1 Test Continuum Test Plan.* San Diego: Naval Command, Control, and Ocean Surveillance Center RDT&E Division (Code 441), October 12, 1995.
4. *Synthetic Theater of War (STOW) System Engineering and Integration Plan for Engineering Demonstration #1.* San Diego: Naval Command, Control, and Ocean Surveillance Center RDT&E Division (Code 441), November 2, 1995.

6.2 NON-GOVERNMENT DOCUMENTS

None.

---

*For further information, contact:

Naval Command, Control and Ocean Surveillance Center RDT&E Division
Attn: T. R. Tiernan
Code 441
San Diego, CA 92152–5001
(619) 553–3562
tiernan@nosc.mil

7. ACRONYMS

AAI	Advanced Communication Technology Satellite Asynchronous Transfer Mode Internetwork
AAR	Aerial Refueling
AAR	Air-to-Air Refueling
AAV	Amphibious Assault Vehicle
AAW	Air-to-Air Warfare
AAW	Anti-air Warfare
ACTS	Advanced Communication Technology Satellite
ACTD	Advanced Concept Technology Demonstration
AEW	Airborne Early Warning
AFSF	Air Force Synthetic Force
AI	Air Interdiction
Air SF	Air Synthetic Forces
AirSAF	Air Semi-Automated Forces
AMRAAM	Advanced Medium Range Air-to-Air Missile
ARL	Applied Research Laboratories
ARL:UT	Applied Research Laboratories: University of Texas
ASF	Army SF
AT	Anti-tank
ATF	Amphibious Task Force
ATM	Asynchronous Transfer Mode
ATDNet	Advanced Technology Demonstration Network
ATI	Advanced Telecommunications, Incorporated
AVLB	Armored Vehicle Launched Bridge
AVMW	Amphibious Vehicle Multi-Wheeled
AWS	Aegis Weapon System
Bn	Battalion
BP	Battle Plan
C^2	Command and Control
C^3I	Command, Control, Communications, and Intelligence
CAP	Combat Air Patrol
CAS	Close Air Support
CCIP	Computer Calculated Impact Point
CCSIL	Command and Control Simulation Interface Language
CE	Command Entity
CFOR	Command Forces
CIG	Computer Image Generator
CIWS	Close-In Weapon System
CVBG	Carrier Battle Group

DARPA	Defense Advanced Research Projects Agency
DSI	Defense Simulation Internet
DIS	Distributed Interactive Simulation
ESC	Electronics System Command
ED-1	Engineering Demonstration #1
ED-1A	Engineering Demonstration-1A
FAC	Forward Air Controller
FARP	Forward Air Refueling Point
FLIR	Forward-looking Infrared Radar
FLOT	Forward Line of Own Troops
FO	Forward Observer
FSATS	Fire Support Automated Test System
FWA	Fixed Wing Aircraft
GFCS	Gun Fire Control System
GMB	Ground Maneuver Box
GPS	Global Positioning System
GUI	Graphic User Interface
HARM	High-Speed Anti-Radiation Missile
HP	Hewlett-Packard
HRL	Hughes Research Laboratories
HWS	Harpoon Weapon System
IC	Individual Combatants
IDA	Institute for Defense Analyses
IFOR	Intelligent Forces
IT	Integrated Technologies
JFACC	Joint Forces Air Component Commander
JTASC	Joint Training and Analysis Simulation Center
JTF	Joint Task Force
KA	Knowledge Acquisition
LADS	LORAL Advanced Distributed Simulation
LAR	Light Armored Reconnaissance
LAR-AT	Light Armored Reconnaissance-Anti-tank
LAR-M	Light Armored Reconnaissance-Mortar
MAGTF	Marine Air Ground Task Force
MCG	Mine Countermeasures Group
MCSF	Marine Corps Synthetic Forces
METT-T	Mission, Enemy, Terrain, Troops available, and Time

MIB	Management Information Base
ModSAF	Modular Semi-Automated Forces
MTC	Movement to Contact
NAWC-AD	Naval Aviation Warfare Center-Aircraft Division
NCCOSC	Naval Command, Control and Ocean Surveillance Center
NOE	Nap of the Earth
NRaD	NCCOSC RDT&E Division
NSF	Navy Synthetic Forces
NSSMS	NATO Sea Sparrow Missile System
NTC	National Training Center
NTP	Network Time Protocol
OPFOR SAG	Opposing Forces Surface Action Group
OS	Ordnance Server
OTH	Over-the-horizon
PCRs	Problem Change Reports
PDU	Protocol Data Unit
Pk	Probability of Kill
PO	Persistent Object
PVD	Plan View Display
RCAS	Red Close Air Support
RDT&E	Research, Development, Test and Evaluation
RITN	Real-Time Information Transfer and Networking
ROE	Rules of Engagement
RTB	Return to Base
RWA	Rotary Wing Aircraft
SAFSIMs	Semi-Automated Forces Simulation
SAFSTAs	Semi-Automated Forces Station
SAIC	Science Application International Corporation
SE	Synthetic Environment
SEAD	Suppression of Enemy Air Defense
SE&I	System Engineering & Integration
SF	Synthetic Forces
SFI	Synthetic Forces Interoperability
SGI	Silicon Graphics, Inc.
SIM	Simulation
SME	Subject Matter Expert
SSIT	Subsystem Integration Test
STOW	Synthetic Theater of War
STOW 97	Synthetic Theater of War 97
STRICOM	Simulation, Training and Instrumentation Command
STW	Strike Warfare

STXs	Situational Test Exercises
TDB	Terrain Data Base
TEC	Topographic Engineering Center
TOW	Tube Launched, Optically Tracked, Wireguided Missile Weapon System
TWCS	Tomahawk Weapon Control System
USACOM	United States Atlantic Command
USMC	United States Marine Corps
UT	University of Texas
UVT	Unit Verification Test
vFTX	virtual Field Training Exercise
WISSARD	What If Simulation System for Advanced Research and Development

APPENDIX A
PROBLEM CHANGE REPORT (PCR) LIST

A-1 INTRODUCTION

The following Problem Change Reports (PCRs) were received at NRaD during the SSITs and EDs. The Navy Synthetic Forces PCRs are followed by the Marine Corps Synthetic Forces. Requests for additional information should be addressed to the Navy/Marine Corps SF Configuration Manager, Bernie Higgins (higgins@nosc.mil), 619-553-3566. Although there were problems experienced, there were no PCRs entered into the NRaD data base relating to the following synthetic forces:

1. Army Synthetic Forces;
2. Air Force Synthetic Forces;
3. CFOR/IFOR;
4. Synthetic Environment (SE).

A-2 NAVY SYNTHETIC FORCES

Table A-1 lists the Problem Reports for Navy Synthetic Forces (NSF).

Table A-1. Navy Synthetic Forces PCRs.

Number	PRI.	Title	Status	Action
NSF-001	2	No CCSIL Between NSF & Navy Air	Open	B. Edmonds, J. Hines
NSF-002	5	5-Inch Not Hitting Targets	Closed	
NSF-003	2	CIWS Not Engaging Fast Missiles	Open	J. Hines
NSF-004	2	CIWS Engaging Crossing A/C Out of Range	Open	J. Hines
NSF-005	5	Ships Run Aground	Closed	
NSF-006	5	Link-11 36 Contacts	Closed	
NSF-007	3	No Comms CVBG-to-ATF	Open	J. Hines
NSF-008	2	SM-2 No Flyout	Open	A. Wachter
NSF-009	5	Movement Anomalies	Open	K. Ferguson
NSF-010	5	Harpoon Self Launches	Open	K. Ferguson
NSF-011	3	GUI-Amphibious Operational Overlay	Open	SF CCB
NSF-012	3	GUI-Entities Disappearing & Reappearing	Open	SF CCB
NSF-013	3	SQQ-89 Is Not Radar	Open	J. Hines

Table A-1. Navy Synthetic Forces PCRs. (Continued)

Number	PRI.	Title	Status	Action
NSF-014	3	AOE CIWS Won't Stop Shooting	Open	J. Hines
NSF-015	2	Need Larger Smoke Plume	Open	SF CCB
NSF-016	2	Sweep Gear Appears as Second Ship	Open	SF CCB
NSF-017	2	Weapon Detonations Too Small	Open	SF CCB
NSF-018	2	LCU Appears as LCAC	Open	SF CCB
NSF-019	2	AOE, LSD, LPD, & Fishing Boats Appear as LHDs	Open	SF CCB
NSF-020	3	CIWS Rounds Incorrect & They Miss	Open	J. Hines
NSF-021	2	Fire PDU Error Messages	Open	A. Wachter
NSF-022	2	Sea Sparrow No Flyout	Open	A. Wachter
NSF-023	5	SM-2 No Flyout	Closed	
NSF-024	2	Harpoon No Flyout	Open	A. Wachter
NSF-025	2	Tomahawk No Flyout	Open	A. Wachter
NSF-026	2	Tomahawk Lost Enroute	Open	A. Wachter
NSF-027	2	Tomahawk Misses Target	Open	A. Wachter
NSF-028	2	Only One Tomahawk in Flight	Open	A. Wachter
NSF-029	2	Limited Tomahawk Target Missions	Open	A. Wachter

A-3 MARINE CORPS SYNTHETIC FORCES

Table A-2 lists the PCRs Marine Corps Synthetic Forces (MCSF).

Table A-2. Marine Corps Synthetic Forces PCRs.

Number	PRI.	Title	Status	Action
MCSF-001	5	USMC DI entities embark but do not debark	Closed	
MCSF-002	5	Some .rdr files cannot be found at load time	Closed	
MCSF-003	1	Core dump, On follow a vehicle by LAV-AT, On follow a vehicle by HMMWV-TOW	Open	J. Yi
MCSF-004	5	Constant message "MOVEMAP ERROR= MOVEMAP_MAX_VERTICES exceeded libgeometry'geo-cut-polygon ()+MAX-VERTS exceeded"	Closed	
MCSF-005	4	Placed AAV Plt. in column or stagger column. In both cases, created "On Line"	Open	C. Hale
MCSF-006	1	Core Dump, Assigned Move w/follow leader, task to CAAT team; I was replacing a move task	Open	C. Hale
MCSF-007	5	Receiving error message "route map rules not specified" after map database load	Closed	
MCSF-008	5	USMC AT TOW should be HMMWV TOW	Closed	

Table A-2. Marine Corps Synthetic Forces PCRs. (Continued)

Number	PRI.	Title	Status	Action
MCSF-009	1	Core dump, moved Red units and caused core dump running on Private and Sergeant	Open	C. Hale
MCSF-010	1	Embark/Debark in conjunction w/NAVSAF tows on LCAC	Open	C. Hale
MCSF-011	1	Core Dump caused by entity count/or creation of “Rifle Platoon”	Open	B. Hoff
MCSF-012	2	Embark/Debark in helo point to point on shore	Open	C. Hale
MCSF-013	3	PVD displays for LAV show incorrect vehicle markings, and LAV turret is in wrong position	Open	C. Hale
MCSF-014	5	Embark/Debark in ship to shore movement	Closed	
MCSF-015	5	Emark/Debark in conjunction w/NAVSAF TWS on LCAC	Closed	
MCSF-016	4	Harrier doesn’t kill DI	Open	C. Hale
MCSF-017	2	“Mobility Killed” M1 still moves	Open	J. Yi
MCSF-018	3	TOW Team moves unexpectedly	Closed	
MCSF-019	5	HMMWV TOW doesn’t kill red DI	Open	C. Hale
MCSF-020	5	AAVs do not move in the water	Closed	
MCSF-021	4	AAVs do not move when triggered by a control measure	Open	J. Yi
MCSF-022	3	M1 Tank platoon reactions to enemy fire when enemy not detected (UREACTIF)	Open	C. Hale
MCSF-023	4	M1 moves to assault position even though fire killed	Open	C. Hale
MCSF-024	5	Administrative Error	Closed	
MCSF-025	5	M1 moves to assault position even though fire killed	Closed	
MCSF-026	2	HMMWV TOW rules of engagement (ROE) incorrect	Open	J. Yi
MCSF-027	2	Default values are incorrect	Closed	
MCSF-028	5	CAAT Team Rules of Engagement (ROE) incorrect	Closed	
MCSF-029	2	Tank platoon has Erratic movement	Closed	
MCSF-030	3	“Next” button in text editor does not work	Open	C. Hale
MCSF-031	3	CAAT Team gets stuck in the water	Open	C. Hale
MCSF-032	4	CAAT Team assault not realistic	Open	J. Yi
MCSF-033	4	Vehicles do not react correctly when fired upon	Open	J. Yi
MCSF-034	5	60-mm Mortar squad has movement problem (ED-1 software)	Closed	
MCSF-035	2	Movement of maneuver element to assault position	Open	B. Hoff

Table A-2. Marine Corps Synthetic Forces PCRs. (Continued)

Number	PRI.	Title	Status	Action
MCSF-036	5	Company embark does not work	Closed	
MCSF-037	2	Debark causes strange behavior	Open	C. Hale
MCSF-038	5	Embark does not function correctly	Closed	
MCSF-039	2	AAV cannot swim using a tracked wheel hull	Open	C. Hale
MCSF-040	2	Tasker does not include all munitions & LAV-25 does not swim	Open	C. Hale
MCSF-041	5	General-purpose attach function does not work.	Closed	
MCSF-042	1	USMC attack causes core dump or hangs the system	Open	B. Hoff
MCSF-043	5	Core dump caused by entity count/or creation of “Rifle Platoon”	Closed	
MCSF-044	1	Option Allow—env causes MCSF core dump	Closed	
MCSF-045	2	M1 Platoon does not kill Red DI	Open	J. Yi
MCSF-046	1	Core Dump, ModSAF BMP DI platoon causes core dump	Open	J. Yi
MCSF-047	4	“Move Route” incorrect displayed for AAVs	Open	C. Hale
MCSF-048	5	Need to integrate SRI mods to MCSF	Closed	
MCSF-049	5	Need to integrate SRI mods to MCSF	Closed	
MCSF-050	5	Suppressive Fire ROE permissions when SPAWNED by USMC Assault	Closed	
MCSF-051	2	Both 40 mm and 50 cal firing incorrectly.	Open	C. Hale

APPENDIX B
ARMY SYNTHETIC FORCES SUPPORTING DATA

The following information is provided as supporting data for the Army Synthetic Forces. There was no supporting data for CFOR. STRICOM's Army SF input is contained in the draft Tactical Assessment for Engineering Demonstration No. 1 Report, dated 8 December 1995.

B-1 IFOR CAPABILITIES

The following supporting data relate to IFOR. The following list of behavioral capabilities was—as of 23 August 1995 for RWA and as of 1 July 1995 for FWA—expected to be demonstrated in ED-1. Each line has been annotated with one of four symbols, signifying whether:

1. The behavioral capability was successfully demonstrated in ED-1 [+].
2. The behavioral capability was ready for ED-1, but did not make it into the scenarios that were actually demonstrated [x].
3. The behavioral capability was found, through further KA, to actually be inappropriate, and was thus omitted [^].
4. The behavioral capability was appropriate but not completely implemented by ED-1, and therefore not demonstrated [-].

There is no annotation for a capability that was demonstrated but that did not work, because by the final day of ED-1, all of the demonstrated capabilities did work (modulo had some continued problems with a very specific RWA situation in which pop-ups would be terminated when an out-of-range OPFOR is seen rather than continuing to pop up higher to look for in-range OPFOR). The one remaining annotation, [!], used in the list below, designates behavioral capabilities that we did not expect to be able to demonstrate in ED-1, but we were able to successfully demonstrate.

B-1.1 RWA Capabilities

+ 1. Flying

+ 1.1 Take off and landing from/to FARP

+ 1.2 Team (pair) formations

x 1.2.1 Combat cruise

+ 1.2.2 Combat spread

! Also demonstrated teams of three in addition to two

+ 1.3 Higher formations (up to company)

x 1.3.1 Wedge

x 1.3.2 Line

+ 1.3.3 Trail

+ 1.3.4 Staggered left/right

x 1.3. Echelon left/right

! Companies of varying sizes

! Robustness under members of the company dying

+ 1.4 Route following

+ 1.4.1 Flying to waypoints

+ 1.4.2 Holding at waypoints

+ 1.4.2.1 Hovering

+ 1.4.2.2 Landing

+ 1.5 Terrain following

+ 1.5.1 Low Level

+ 1.5.2 Contour

+ 1.5.3 Nap of the Earth (NOE)

+ 1.6 Movement techniques

+ 1.6.1 Traveling

+ 2. Communication (within company) [must be included to perform mission, but not yet really for testing (or in CCSIL).]

+ 3. Use of battle positions

+ 3.1 Individual aircraft maneuvering

+ 3.1.1 Masking

+ 3.1.2 Unmasking

+ 3.1.3 Remasking

+ 3.1.4 Shifting position

^ 3.2 Attack section maneuvering

- 3.2.1 Changing battle positions

+ 3.3 Breaking contact

^ 3.3.1 By section

+ 3.3.2 Simultaneously

+ 4. Move from a battle position [just basic return to FARP. Not really for testing.]

+ 5. Attrit Mission

! Armed Reconnaissance Mission

+ 5.1 Attack Helicopter (AH-64)

+ 5.1.1 Target Prioritization

+ 5.1.1.1 Giving preference to ADA

! Giving preference to tanks

+ 5.1.2 Laser Designation

+ 5.1.2.1 Self designation

- 5.1.2.2 Remote designation

- 5.1.2.3 Offset lasering

+ 5.1.3 Hellfire Missile Employment

+ 5.1.3.1 Lock on before launch

- 5.1.3.2 Lock on after launch

+ 5.1.4 Attack techniques

+ 5.1.4.1 By individual aircraft

^ 5.1.4.2 By section

^ 5.1.4.3 By section using remote and autonomous fires

- 5.1.4.4 Simultaneous

+ 5.2 Scout Helicopter (AH-64)

+/- 5.2.1 Detecting enemy position and scope (within realm of what is expected) <In particular, demonstrate detection of enemy position but had not completely implemented detection of scope>

+ 5.2.2 Scouting battle positions

+ 5.2.3 Guiding attack helicopters to battle positions

+ 5.2.3.1. In person

x 5.2.3.2 Via radio

+ 5.2.4 Detecting unexpected enemy presence [partial]

! Ignoring irrelevant enemy and friendly presence

B-1.2 FWA

FWA is separated by types of actions, as shown below.

1. Section Flying

+ 1.1 Flying in a variety of formations: combat spread, trail, fighting wing

+ 1.2 Formation maneuvering:

+ 1.3 Changing formations during a mission.

+ 1.4 Changing lead during a mission.

+ 1.5 Fly coordinated air-to-air tactics.

+ 1.6 Radar contracts

+ 1.7 Find partner

+ 1.8 Get into formation: catch up, shackle turn

+ 1.9 Strip and join

+ 1.10 Communication cadence

+ 1.11 Wingman track progress of mission

+ 1.12 Wingman take shots of opportunity

+ 1.13 Wingman request refueling

+ 1.14 Section ground-attack maneuvers: 90 to 10, split, trail.

x 1.15 Abort mission and return home if lose lead

2. Division Flying

+ 2.1 Flying in a variety of formations: box, trail, offset box, line abreast

+ 2.2 Formation maneuvering: turns, trail turns

x 2.3 Changing formations during a mission.

x 2.4 Changing lead during a mission.

+ 2.5 Find partner

+ 2.6 Get into formation: catch up, shackle turn

+ 2.7 Strip and join

+ 2.8 Wingmen track progress of mission

+ 2.9 Wingmen take shots of opportunity

+ 2.10 Wingmen request refueling

3. Air-to-air intercepts

+ 3.1 Appropriate maneuvering for BVR

+ 3.1.1 Achieve TA and LS

+ 3.1.2 Counter turns

+ 3.1.3 Pursue from behind

+ 3.2 Appropriate use of radar

+ 3.3 Employment of appropriate missiles

+ 3.3.1 Radar-guided - not fire and forget

+ 3.3.2 Radar-guided - fire and forget

+ 3.3.3 Infrared

! 3.3.4 Used Ordnance Server

+ 3.4 Support radar-guided when necessary - fpole

+ 3.5 Pick target (and sort)

+ 3.6 Situational awareness from controller

+ 3.6.1 Receive brash in broadcast control

- 3.6.2 Receive brash in close control

+ 3.6.2 Request when necessary (bogey-dope)

+ 3.6.3 Discontinue when not necessary (judy)

+ 3.7 Command and control from controller

+ 3.8 Determine if achieve commit criteria

+ 3.9 Maintain memory of bandit out of sensor envelope

+ 3.9.1 Can use prior visual, radar, or comm. information.

+ 3.10 Search for lost bandit

+ 3.10.1 Look at most recent position

+ 3.10.2 Adjust radar elevation and azimuth to search

x 3.11 Blow through

+ 3.12 Take evasive action

+ 3.12.1 Beam

+ 3.12.2 Change-piece-of-sky when bogey in beam

+ 3.13 Identify contacts

+ 3.14 Interpret bogey behavior

4. Combat Air Patrol

+ 4.1 Fly racetrack

+ 4.1.1 Fly to racetrack

+ 4.1.2 Fly legs of racetrack

+ 4.2 Command and control from E-2C controller

+ 4.2.1 Receive bogey information (3.6)

+ 4.3 Redirection to new CAP stations

+ 4.3.1 Based on CAP station priority

+ 4.4 Control of multiple CAP stations by controller

+ 4.5 Inflight refueling as needed

+ 4.6 Air-to-air intercepts (3.)

5. Close Air Support

+ 5.1 Plan mission

+ 5.1.1 Compute times to achieve waypoints

+ 5.1.2 Compute bingo and joker fuel levels for waypoints

+ 5.1.3 Plan target attack tactics (altitude, geometry, entry, delivery)

x 5.1.4 Replan during flight if mission changes

+ 5.2 Route flying

+ 5.2.1 Fly to control points

+ 5.2.2 Contact appropriate controllers on appropriate radios

+ 5.2.3 Request permission, circle if none given

+ 5.2.4 Fly at appropriate speeds and altitude

+ 5.3 Attack maneuvering

+ 5.3.1 Communicate with FAC (cleared hot, tally ho)

+ 5.3.2 Fly attack profiles (geometry, entry, delivery)

+ 5.3.3 Return attack if necessary

+ 5.4 Communication and coordination between planes and controllers

+ 5.4.1 Accept changes to controllers, radios, route, mission, target

+ 5.4.2 Authenticate

x 5.6 Timed attacks on targets ($\pm$10 seconds)

x 5.6.1 Adjusts speed during transit

x 5.6.2 Delays at contact point if necessary

+ 5.6.3 Fly ASAP missions

+ 5.7 Bombing

+ 5.7.1 Conventional munitions using CCIP

+ 5.7.2 Precision guided munitions (self lasing)

+ 5.7.3 Visual acquisition of targets (tanks)

x 5.7.4 Track moving targets

- 5.7.5 Drop “trains’’ of bombs

+ 5.8 On-call missions

+ 5.9 Inflight refueling

+ 5.9.1 Refuel at prescribed waypoints

+ 5.11 Controllers:

+ 5.11.1 Support all necessary communication with planes

+ 5.11.1.1 authentication

+ 5.11.1.2 permission to enter

+ 5.11.1.3 deconfliction

+ 5.11.1.4 bda

x 5.11.2 Relay change of mission requests between controllers

+ 5.11.3 FAC(A)

+ 5.11.3.1 Fly grid search

+ 5.11.3.2 Circle target

! 5.11.3.3 Mark target with smoke

+6. MiG-Sweep

+ 6.1 Plan mission (see 5.1)

+ 6.2 Route flying (see 5.2)

+ 6.3 Air-to-air intercepts (see 3)

x 6.4 Blow-through (see 3.11)

+7. Take off and landing

+ 7.1 Land at homebase at end of mission

+ 7.2 Takeoff at beginning of mission

+ 7.3 Wait for scramble

! 7.4 Section or division take off with coordinated form up at rendezvous point

! 7.5 Section or division take off with running rendezvous

+8. Strategic Attack (see 8)

+ 8.1 Plan mission (see 5.1)

+ 8.2 Route flying (see 5.2)

+ 8.3 Attack maneuvering (see 5.3)

+ 8.4 Communication and coordination between planes and controllers (see 5.4)

+ 8.5 Timed attacks on targets (±10 seconds) (see 5.6)

+ 8.6 Bombing (see 5.7)

+ 8.7 Inflight refueling (see 5.9)

+ 8.8 Controllers (see 5.11)

!9. SEAD (see 8)

! 9.1 Firing High-Speed Anti-Radiation Missile (HARM) Missiles

B-2 IFOR PCRS

B-2.1 FWA

This is a detailed list of the bugs/weaknesses/needed-enhancements found in the IFOR FWA code as a result of ED-1. A description of the problem is followed by the status of the problem.

1. There were several core dumps. We did not know the causes of these at the time. FIXED.
2. The E-2C sees ground vehicles and all Blue vehicles. Temporary fix was to make it so that the radar sensor did not pass these in. FIXED.
3. The E-2C needs to switch to close-control for committed fighters so that they do not get all of the broadcast messages. Maybe need to increase time (currently 60 sec) between control reports. Added close-control. FIXED.
4. We need to fix the interface for missiles handled by the OS. Waiting for new version of OS. DEFERRED.
5. Terminal targeting needs to be improved so that we get off bomb drops better. One bug was found and fixed the night before ED-1. A new method for terminal targeting was implemented. FIXED.
6. Targeting of moving targets is a problem. Need to make it possible for Computer Calculated Impact Point (CCIP) to be set to a target. FIXED.
7. Should not use waypoint computer once CCIP is enabled. FIXED.
8. IFOR need to return to base (RTB) when a Combat Air Patrol (CAP) mission runs out of missiles (or just gets low). FIXED.
9. Problem targeting the SA-9s when there was an SA-2 (we didn't see the SA-9s, or at least didn't target them). Could not duplicate because an SA-2 could not be created. Still a mystery where it originated. REMOVED.
10. The HARMs missed when there was a heavy load on the machine. Still a potential problem. Need to use OS in the long run. DEFERRED.
11. Continuous calls for partner and continual selections of the disregard-bogey-comm info. This was one of two to three bad bugs. FIXED.

12. FPole should be 20 degrees, not 40 degrees (according to Mark C.). Misinterpreted comments by SME. Not a problem. It was changed to 20 degrees to help debug the OS, but should stay at 40 degrees. REMOVED.
13. Sometimes an intercept was committed very late. Does the commit operator compete with fly-flight-plan (or something like this), so if we don't terminate one of those operators, we don't get the intercept? Could not duplicate. Not confirmed as a bug. REMOVED.
14. Skywalk-1 once refueled twice. FIXED.
15. Need E-2C and other missions to call ''SCRAM north/south/090/...'' if one section is firing near another. NOT FIXED.
16. Also need ''winchester'' for meaning out of missiles (well, probably don't need it, but it sounds so cool). FIXED.
17. Need to check the code for when section/division members are lost. Leia-1 SNCed once. FIXED.
18. Got a loop between identify-by-call-sign and forget-bogey. FIXED.
19. Wingman incorrectly calls joker after takeoff when headed for tanker. Should either say nothing, or ''requires texaco.'' NOT FIXED YET.
20. Fighter sections say clean even when they are not expected to see bogey (such as during refueling). Should not respond then. NOT FIXED YET.
21. When bogey is headed toward plane, plane should call "nose hot.'' NOT FIXED YET.
22. Once fighters have bogeys, they will take over the cadence of communication with the E-2. NOT FIXED YET.
23. Everything heard on the Fleet Air Defense (FAD) radio should be heard by the wingman. NOT FIXED YET.

B-2.2 RWA

1. Improve RWA flight dynamics, particularly under heavy computational load. To be taken care of by ESC and LADS?
2. Make turns smoother and more computationally efficient. Slow down as a function of sharpness of turn and size of group turning. Look at adjusting rate of turn. Work on clean and coordinated takeoffs. Work on smooth (non-swiveling) slow down. Smooth and made turns more computationally efficient. Improved takeoffs.
3. Look into flying at higher speed (120 or even 140 kn) in low-level. See if accelerating more slowly (either through intermediate waypoints or altering ModSAF's rate of change in acceleration) will help. Can now fly up to 110 kn by more carefully controlling acceleration.
4. Get more realistic OPFOR, for example ZSUs that require ~10s to fire from time of first visibility, rather than ~0s (and that will stay with the tanks they are accompanying rather than abandoning them). To be taken care of by OPFOR community?
5. Implement remote designation.
6. Figure out general criteria for height of popup, when to terminate popup before reach planned height (based on general threat and opportunity criteria?), and when to leave battle position. Some analysis performed.

7. While flying, set terrain lookahead as a function of speed, and set speed (and possibly altitude) as a function of visibility.
8. Work out a solution for RWA visual overload problems. In early stages of working on this.
9. Work on robustness of groups when entities are killed. In particular, need to be able to assume important positions such as commander or scout when such die. Part of planned work on team behavior.
10. Work on general criteria for returning to FARP, including when damage to the unit necessitates this. Performed KA on criteria for returning to FARP.
11. Work on overall efficiency, but particularly when turning and engaging. Solved one major RWA efficiency problem.
12. Work on appropriate response to reaching Battle Plan (BP) and finding enemy to be out of range. This may include moving to a new BP, or sending a scout out to act as remote designator. Significant progress was made in the context of CFOR terrain reasoning work.
13. Add remaining company and team formations, including some more flexible and less predictable real-world formations (as described by Captain Don Lassiter). Added significant flexibility to formation flying.
14. Add (or get someone else to add) RWA countermeasures; in particular, RWR and IR jamming. RWR should provide 360-degree information about direction, distance, and identity of entities illuminating. Needs to be deferred to others.
15. Determine why RWA are firing missiles at dead vehicles. Is it because of a communication delay when Red and Blue are on different machines? Is it because of waiting for the “barrel” to track the target between when a fire missile comm is given by the agent, and when the missile is actually fired? Whatever the reason, this needs to be fixed.
16. Can we eliminate (or get eliminated) this whole issue of “barrel tracking” for missiles such as hellfires, and get hellfire tracking fixed in general? Needs to be deferred to others.
17. Terrain understanding/reasoning for RWA while flying (to enable selecting new battle, firing, and lasing positions; determine waypoints in getting to newly selected positions; and allow flying Nap of the Earth (NOE) around obstacles rather than over them). Significant progress in the context of CFOR development.
18. Change BP when appropriate. Part of planned CFOR work.
19. Crossing Forward Line of Own Troops (FLOT).
20. Communicate among RWA to share information, as appropriate, with other vehicles about what has been determined about enemy forces, damage to friendlies, etc. General reasoning and models of other RWA could be used here to determine when others are likely to have information, but likely to need it. More explicit knowledge-based strategies are also conceivable. Progress in the context of a significantly improved model of team behavior.
21. Make sure all requisite damage tables are realistic. Needs to be deferred to others.
22. Work on target prioritization within vehicle class. This may include targeting the biggest current threat within a class and/or further partitioning of targets (e.g., left-to-right) across RWA. Part of planned work on perception and attention.

23. Ferretting out vehicles hidden (in terrain, trees, etc.) and attacking them. Part of planned work on perception and attention.
24. Alter RWA vision to correspond to appropriate angular and distance limitations. If necessary, take into consideration availability of TV at two levels of magnification. At night, will need to take forward-looking infrared radar (FLIR) and goggles into consideration as well. Needs to be deferred to others.

APPENDIX C
NAVY SYNTHETIC FORCES SUPPORTING DATA

The following information is provided as supporting data for the Navy Synthetic Forces, provided as analysis items.

C-1. ENGINEERING – BASIC HULL

DATA REQUIRED: Appearance and stability of testable ship icon on two-dimensional display, and verification of hull width, length, height, and mass. Battle damage assessment is also included under Basic Hull with number, type, size, and location of weapons and status of engineering, operations, and weapons systems and sensors after weapons impact, including whether impact caused catastrophic or noncatastrophic damage.

APPLICABLE SHIP CLASSES: CG–59, DDG–51, DD–963, CVN–68, and AOE–6

ANALYSIS: At the start of each day of ED-1, a full-force laydown, consisting of approximately 19 Navy SF Build 2 ships, was created. Approximately 12 additional hulls were also created to enhance the scenario and to populate the Amphibious Task Force (ATF) and the Mine Countermeasures Group (MCG). These additional hulls were not testable since they were not part of Build 2. The DD–963 and DDG-51 hulls were subjected to hits from underwater mines, SM2 missiles, harpoon missiles, and 5-inch shells. Both hulls displayed the correct catastrophic damage level, 50%, when hit with one large weapon (mine or SM–2), and 100% when hit by two large weapons. Hulls with 50% catastrophic damage changed to 100% when hit by one or more 5-inch shells. Note that this is the current implementation of damage to show capability, not a validated damage model.

EVALUATION: SATISFACTORY. The observed entity appearance and characteristics of all testable hulls were consistent with the appearance and characteristics contained in Navy SF software requirements.

C-2. ENGINEERING – POWERPLANT

DATA REQUIRED: Appearance and stability of testable ship icon on a two-dimensional display while ship is underway at various ordered forward speeds.

APPLICABLE SHIP CLASSES: CG–59, DDG–51, DD–963, CVN–68, and AOE–6

ANALYSIS: Because of time constraints imposed by a continuous ED-1 scenario and the large size of the demonstration, each individual testable ship icon could not be observed at all times. Most all of the testable ships moved as ordered throughout the four days of ED-1, but there were a few observed anomalies. On 19 October, a DDG–51 would not accept a modify task order to decrease speed, then it jumped 10 nm south of its original location. On 20 October, a DD–963 moving north as part of the CVBG jumped on top of a DDG–51, also in the formation. On 20 October, a DDG–51 with the ATF jumped out of its assigned area, FSA–5, but jumped back within seconds. There were several movement anomalies recorded for the nontestable ships (MCMs, LCACs and LCUs) throughout ED-1.

EVALUATION: SATISFACTORY. Based on the collective visual observations, overall appearance and stability of testable ship icons while underway at various ordered forward speeds were

consistent with the appearance and characteristics contained in Navy SF software requirements, with investigation of noted anomalies.

C-3. ENGINEERING – FUEL CONSUMPTION

DATA REQUIRED: Amount (default) of fuel carried by testable ship (in gallons) when ship is newly created. Amount of fuel carried by testable ship at start of event, at end of event, and amount of fuel used. Ordered speed and duration of fuel consumption test.

APPLICABLE SHIP CLASSES: CG–59, DDG–51, DD–963, and AOE–6

ANALYSIS: Because of time constraints imposed by a continuous ED-1 scenario, default fuel loads were not checked when the testable hulls were created, and fuel consumption rates of all testable hulls were not observed during ED-1. Fuel consumption tests were performed during UVT and IT.

EVALUATION: NOT OBSERVED

C-4. OPERATIONS – MANEUVERING

DATA REQUIRED: Appearance and stability of testable ship icon on a two-dimensional display while ship is underway at various ordered forward speeds, when ordered to accelerate or decelerate to a new ordered forward speed, when ordered to a course and speed that provides a specific relative wind (FOXCORPEN), and when maneuvering to avoid collision. Appearance, stability, and turn radius of testable ship icon on two-dimensional display for given speed and rudder combinations.

APPLICABLE SHIP CLASSES: CG–59, DDG-51, DD–963, CVN–68, and AOE–6

ANALYSIS: Because of time constraints imposed by a continuous ED-1 scenario and the large size of the demonstration, each testable ship maneuver could not be observed at all times. Most of the testable ships moved as ordered throughout the four days of ED-1 but there were a few observed anomalies that were discussed above in “Engineering – Powerplant.” From earlier testing it is known that the acceleration/deceleration and turning characteristics are correct only for the CG–59. The DDG–51, DD–963, CVN–68, and AOE–6 models all use CG–59 values due to unavailable KA. Turning radius tests were performed during UVT and IT, and FOXCORPEN, acceleration/deceleration, and collision avoidance tests were performed during UVT.

EVALUATION: SATISFACTORY. Based on the collective visual observations, the characteristics and capabilities of testable ship maneuvers were consistent with the characteristics and capabilities contained in Navy SF software requirements, with the exception that acceleration/deceleration and turning rates for all hulls were the same as the CG–59.

C-5. OPERATIONS – GPS

DATA REQUIRED: Position (latitude and longitude) of testable hulls.

APPLICABLE SHIP CLASSES: CG–59, DDG–51, DD–963, CVN–68, and AOE–6

ANALYSIS: At the start of each day of ED-1, a full-force laydown consisting of approximately 19 Navy SF Build 2 ships, was created. Approximately 12 additional hulls were also created to enhance the scenario and to populate the Amphibious Task Force (ATF) and Mine Countermeasures

Group (MCG). These additional hulls were not testable since they were not part of Build 2. Each ship was positioned in accordance with a predesigned template giving latitude and longitude for each one. Throughout the four days of ED-1 the testable ship locations on the map were accurate to the level of fidelity of the map display.

EVALUATION: SATISFACTORY. The observed entity appearance and characteristics of all testable hulls' GPS were consistent with the appearance and characteristics contained in Navy SF software requirements.

C-6. OPERATIONS – VOICE NETS

DATA REQUIRED: Text of CCSIL messages transmitted. Verification that CCSIL messages were received. Changes in course and/or speed of testable ships, and LAMPS helicopter, as a result of CCSIL messages.

APPLICABLE SHIP CLASSES: CG–59, DDG–51, DD–963, CVN–68, and AOE–6

ANALYSIS: Transmission of CCSIL messages from NRaD to WISSARD was attempted 11 times during ED-1. All attempts failed. On 17 October, six attempts were made to attach the Test Actor to testable ships, three times to CG–59, twice to DDG–51, and once to CVN–68. On 18 October, a CCSIL message was transmitted from DDG–51 at NRaD, but the back-end at WISSARD receiving the message crashed. On 19 October, three attempts to send CCSIL messages from the CG–59 at NRaD were made. WISSARD did not receive any of them. On 20 October, no attempt to transmit a CCSIL message from NRaD to WISSARD was reported. On 20 October, LINK–11 was tested between the CVBG and the ATF, but did not work. Note that on 19 October, just prior to start of the exercise with no network traffic, CCSIL messages were successfully passed between Navy SF and Air SF.

EVALUATION: UNSATISFACTORY. Based on the collective visual observations, the characteristics and capabilities of testable ship Voice Nets were inconsistent with the characteristics and capabilities contained in Navy SF software requirements.

C-7. WEAPONS SYSTEMS – Mk 45 5-INCH GUN

DATA REQUIRED: Magazine inventory by type of projectile of each Mk 45 5-inch gun carried by testable ship, if ship is newly created. Magazine inventory by type of projectile at start of event and at end of event. Number of rounds selected to be fired in each salvo. Projectile type, rate of fire ordered, gun selection (fwd, aft), and target fired at (direct fire), or location fired at (indirect fire) for each engagement. Time to fire the ordered number of rounds (rapid fire, slow fire). Cutout arcs and range-to-target when first round is fired. Visual representation of hits or misses on two-dimensional display. Results of impacts on target.

APPLICABLE SHIP CLASSES: CG–59, DDG–51, and DD–963

ANALYSIS: Mk 45 gun engagements were conducted every day during ED-1, firing several hundred rounds. When fired at a stationary land target such as a tank (with both direct and indirect fire), there was only one recorded hit during all of ED-1. Analysis shows that the Navy SF use of ModSAF probability of hit tables needs improvement. Blue versus Red ship engagements were conducted on 17 October and 19 October, with hits scored in both engagements. From UVT and IT results, it is known that default ammunition inventory and magazine decrementation work properly

in the CG–59, DDG–51, and DD–963 hulls. Earlier testing also showed that the number of rounds selected, projectile type, rate of fire ordered (rapid or slow), and which gun selected, work properly. Cutout arcs, and range-to-target when first round is fired were tested during UVT. Note that during ED-1, all hulls used the CG–59 cutout arcs.

EVALUATION: SATISFACTORY. Based on the collective visual observations, the characteristics and capabilities of testable ship Mk 45 5–inch guns were consistent with the characteristics and capabilities contained in Navy SF software requirements, with the noted probability of a hit problem.

C-8. WEAPONS SYSTEMS – Mk 34/86 GUN FIRE CONTROL SYSTEM (GFCS)

DATA REQUIRED: Firing order (engage, cease fire), projectile type, rate of fire, number of rounds used, which gun (fwd, aft) used, and target fired at (direct fire) or location fired at (indirect fire) for each engagement. Time to fire the ordered number of rounds (rapid fire, slow fire). Visual representation of shell impacts on two-dimensional displays. Results of shell impacts on target.

APPLICABLE SHIP CLASSES: DDG–51, CG–59 and DD–963

ANALYSIS: Because of time constraints imposed by a continuous ED-1 scenario, not all of the detailed data as described above were recorded. Visual representation of hits or misses and results of impacts on targets were recorded in logs, along with any anomalies. The Mk 34/86 GFCS was used every day of ED-1 to control Mk 45 gun engagements. Several hundred rounds were fired. When fired at a stationary land target such as a tank (with both direct and indirect fire), there was only one recorded hit during all of ED-1. Analysis shows that the Navy SF use of ModSAF probability of hit tables needs improvement. Blue versus Red ship engagements were conducted on 17 October and 19 October, with hits scored in both engagements. From UVT and IT results, it is known that the firing order, number of rounds selected, projectile type, rate of fire ordered (rapid or slow), and gun selection, work properly in the DDG–51, CG–59, and DD–963 hulls. The one exception is that the Cease Fire order had not been implemented prior to ED-1.

EVALUATION: SATISFACTORY. Based on the collective visual observations, the characteristics and capabilities of testable ship Mk 34/86 GFCS were consistent with the characteristics and capabilities contained in Navy SF software requirements, with the noted Cease Fire exception.

C-9. WEAPONS SYSTEMS – Mk 15 CIWS

DATA REQUIRED: Status of system (auto or manual) and gun selection (fwd, aft or starboard, port). Magazine inventory of each Mk 15 CIWS gun carried by testable ship, if ship is newly created. Magazine inventory at start of event, at end of event, and number of rounds used during event. Number of rounds selected to be fired in each salvo or default selection. Time delay between target detection and when first round is fired. Cutout arcs and range-to-target when first round is fired. Visual representation of hits or misses on two-dimensional displays. Results of impacts on target.

APPLICABLE SHIP CLASSES: CG–59, DDG–51, DD–963, CVN–68, and AOE–6

ANALYSIS: Because of time constraints imposed by a continuous ED-1 scenario, not all of the detailed data as described above were recorded. Visual representation of hits or misses and results of impacts on targets was recorded in logs, along with any anomalies. Mk 15 CIWS engagements were conducted every day during ED-1, firing several hundred rounds. On 17 October and 20 October,

four ships (CG–59, DDG–52, DD–963 and AOE–6) each destroyed hostile aircraft with their Mk 15 CIWS in automatic. On 18 October, the DD–963 and AOE–6 both destroyed a hostile aircraft with their Mk 15 CIWS in automatic. On 19 October, CVN–68 destroyed two hostile aircraft with the Mk 15 CIWS in automatic. However, on 17 October, the AOE–6 Mk 15 CIWS continued to fire after shooting down two hostile aircraft. Also, on 17 October, the CG–59 Mk 15 CIWS fired six rounds at a hostile aircraft, all missing, vice the default of 100 rounds that should have been used if the system continued to miss. On 18 October, the CG–59 Mk 15 CIWS fired at a crossing target when it should not have. This occurred because there is no range rate input programmed into the Mk 15 CIWS model. It was also observed during ED-1 that the Mk 15 CIWS would not always engage high-speed targets. This was probably due to the software contact sample rate being too low, allowing high-speed missiles to slip past the CIWS. From UVT and IT results, it is known that default ammunition inventory and magazine decrementation work properly in all hulls. Cutout arcs and range-to-target when first round is fired were tested during UVT. Note that during ED-1, all hulls used the CG–59 cutout arcs

EVALUATION: UNSATISFACTORY. Based on the collective visual observations, the characteristics and capabilities of testable ship Mk 15 CIWS were inconsistent with the characteristics and capabilities contained in Navy SF software requirements.

C-10. WEAPONS SYSTEMS – Mk 7/8 AEGIS WEAPON SYSTEM (AWS)

DATA REQUIRED: Magazine inventory of SM2 and SM2 BLK4 missiles carried by testable ship, if ship is newly created. Magazine inventory of SM2 and SM2 BLK4 missiles carried by testable ship at start of event, at end of event, and number of missiles used during event. Number of SM2 or SM2 BLK4 missiles selected to be launched in each event. Time delay between launch order, actual launch of first missile, and between missile salvos for multiple launches.

APPLICABLE SHIP CLASSES: CG–59 and DDG–51

ANALYSIS: Because of time constraints imposed by a continuous ED-1 scenario, not all of the detailed data as described above, were recorded. There were some 66 SM2 missile launches observed and recorded during ED-1. All launches were successful in that there were no anomalies observed with regard to magazine inventory decrementation. When a CG–59 or DDG–51 was ordered to launch an SM2, it did. From UVT and IT results, it is known that the default missile inventory and decrementation work properly in the CG–59 and DDG–51 hulls. Earlier testing also showed that the number of missiles selected and the time delays work properly.

EVALUATION: SATISFACTORY. Based on the collective visual observations, the characteristics and capabilities of testable ship Mk 7/8 AWS were consistent with the characteristics and capabilities contained in Navy SF software requirements.

C-11. WEAPONS SYSTEMS – TWCS

DATA REQUIRED: Magazine inventory of Tomahawk missiles carried by testable ship, if ship is newly created. Magazine inventory of Tomahawk missiles carried by testable ship at start of event, at end of event, and number of missiles used during event. Number of Tomahawk missiles selected to be launched in each event. Time delay between launch order, actual launch of first missile, and between missile salvos for multiple launches.

APPLICABLE SHIP CLASSES: CG–59, DDG–51, and DD–963

ANALYSIS: Because of time constraints imposed by a continuous ED-1 scenario, not all of the detailed data as described above was recorded. There were 13 Tomahawk missile launches observed and recorded during ED-1. All launches were successful in that there were no anomalies observed with regard to magazine inventory decrementation. When a CG–59, DDG–51, or DD–963 was ordered to launch a TLAM, it did. From UVT and IT results it is known that default missile inventory, and decrementation work properly in the CG–59, DDG–51, and DD–963 hulls. Earlier testing also showed that the number of missiles selected and the time delays work properly.

EVALUATION: SATISFACTORY. Based on the collective visual observations, the characteristics and capabilities of testable ship TWCS were consistent with the characteristics and capabilities contained in Navy SF software requirements.

C-12. WEAPONS SYSTEMS – HWS

DATA REQUIRED: Magazine inventory of Harpoon missiles carried by testable ship, if ship is newly created. Magazine inventory of Harpoon missiles carried by testable ship at start of event, at end of event, and number of missiles used during event. Number of Harpoon missiles selected to be launched in each event. Time delay between launch order, actual launch of first missile, and between missile salvos for multiple launches.

APPLICABLE SHIP CLASSES: CG–59, DDG–51, and DD–963

ANALYSIS: Because of time constraints imposed by a continuous ED-1 scenario, not all of the detailed data as described above were recorded. There were some 47 Harpoon missile launches observed and recorded during ED-1. All launches were successful in that there were no anomalies observed with regard to magazine inventory decrementation. When a CG–59, DDG–51, or DD–963 was ordered to launch a Harpoon, it did. From UVT and IT results, it is known that default missile inventory and decrementation work properly in the CG–59, DDG–51, and DD–963 hulls. Earlier testing also showed that the number of missiles selected and the time delays work properly.

EVALUATION: SATISFACTORY. Based on the collective visual observations, the characteristics and capabilities of testable ship HWS were consistent with the characteristics and capabilities contained in Navy SF software requirements.

C-13. WEAPONS SYSTEMS – Mk 57 NSSMS

DATA REQUIRED: Status of system (auto or manual) and gun selection (fwd, starboard aft, port aft). Magazine inventory of Sea Sparrow missiles carried by testable ship, if ship is newly created. Magazine inventory of Sea Sparrow missiles carried by testable ship at start of event, at end of event, and number of missiles used during event. Number of Sea Sparrow missiles selected to be launched in each event, or default selection. Time delay between launch order, actual launch of first missile, and between missile salvos for multiple launches. Cutout arcs and range-to-target when first missile is fired.

APPLICABLE SHIP CLASSES: DD–963, CVN–68, and AOE–6

ANALYSIS: Because of time constraints imposed by a continuous ED-1 scenario, not all of the detailed data as described above were recorded. There were some 104 Sea Sparrow missile launches observed and recorded during ED-1. All launches were successful in that there were no anomalies

observed with regard to magazine inventory decrementation. When a DD–963, CVN–68, or AOE–6 was ordered to launch a Sea Sparrow, it did. From UVT and IT results, it is known that default missile inventory and decrementation work properly in the DD–963, CVN–68, and AOE–6 hulls. Earlier testing also showed that the automatic launch, number of missiles selected, and time delays work properly. Cutout arcs and range-to-target when first round is fired were tested during UVT. Note that during ED-1, all hulls used the CG–59 cutout arcs.

EVALUATION: SATISFACTORY. Based on the collective visual observations, the characteristics and capabilities of testable ship Mk 57 NSSMS were consistent with the characteristics and capabilities contained in Navy SF software requirements.

C-14. WEAPONS SYSTEMS – HARPOON MISSILE

DATA REQUIRED: Selection of OS for each launch, using the Entity Control Interface.

APPLICABLE SHIP CLASSES: CG–59, DDG–51, and DD–963

ANALYSIS: A total of 47 Harpoon missile launches were observed and recorded during ED-1. Of those 47, the OS was successfully selected 19 times to launch Harpoon missiles at targets. Using the OS, 8 out of 19 flyouts were successful, and 7 of the 8 hit targets. There were nine launches using the OS that resulted in no flyouts, and two launches that flew out in the opposite direction from what was ordered. There was one anomaly where it was believed that two Harpoon missiles were launched without the operator manually ordering them. This has never been repeated.

EVALUATION: SATISFACTORY. Based on the collective visual observations, the characteristics and capabilities of the testable ship Harpoon Missile were consistent with the characteristics and capabilities contained in Navy SF software requirements. The evaluation of the Harpoon Missile as SATISFACTORY does not include the performance of the OS. The only Navy SF requirement here is the capability to use the Entity Control Interface to launch a Harpoon missile at a designated target using the OS.

C-15. WEAPONS SYSTEMS – TOMAHAWK MISSILE

DATA REQUIRED: Selection of OS for each launch, using the Entity Control Interface.

APPLICABLE SHIP CLASSES: CG–59, DDG–51, and DD–963

ANALYSIS: A total of 13 Tomahawk missile launches were observed and recorded during ED-1. The OS was successfully selected all 13 times. Of these, five flyouts were evaluated as successful, with no direct hits on the target. There were eight launches using the OS that resulted in no flyouts. During one event on 17 October, two Tomahawk missiles were launched from a DDG–51, but only one flyout was observed, which stopped short of the target. While the flyout was in progress, two more Tomahawk missiles were launched, but no flyouts were observed. Analysis indicates that the OS could only support one missile at a time. All successful flyouts ended with missile impact between 70 ft and 7 nm away from the target. There was one anomaly where it was believed a Tomahawk missile was launched without the operator manually ordering it. This was never repeated.

EVALUATION: SATISFACTORY. Based on the collective visual observations, the characteristics and capabilities of the testable ship Tomahawk Missile were consistent with the characteristics and capabilities contained in Navy SF software requirements. The evaluation of the Tomahawk missile as SATISFACTORY does not include the performance of the OS. The only Navy SF

requirement here is the capability to use the Entity Control Interface to launch a Tomahawk missile at a designated target using the OS.

C-16. WEAPONS SYSTEMS – SM2 MISSILE

DATA REQUIRED: Selection of OS for each launch, using the Entity Control Interface.

APPLICABLE SHIP CLASSES: CG–59 and DDG–51

ANALYSIS: A total of 66 SM2 missile launches were observed and recorded during ED-1. Of those 66, the OS was successfully selected 56 times to launch SM2 missiles at targets. With using the OS, 38 flyouts were successful and 35 of the 38 hit targets. There were 18 launches using the OS that resulted in no flyouts.

EVALUATION: SATISFACTORY. Based on the collective visual observations, the characteristics and capabilities of the testable ship SM2 Missile were consistent with the characteristics and capabilities contained in Navy SF software requirements. The evaluation of the SM2 missile as SATISFACTORY does not include the performance of the OS. The only Navy SF requirement here is the capability to use the Entity Control Interface to launch an SM2 missile at a designated target using the OS.

C-17. WEAPONS SYSTEMS – SEA SPARROW MISSILE

DATA REQUIRED: Selection of OS for each launch, using the Entity Control Interface.

APPLICABLE SHIP CLASSES: DD–963, CVN–68, and AOE–6

ANALYSIS: A total of 104 Sea Sparrow missile launches were observed and recorded during ED-1. Of those 104, the OS was successfully selected 24 times to launch Sea Sparrow missiles at targets. Using the OS, no flyouts were observed. Analysis indicates that the OS was not integrated to the point that it could support Sea Sparrow missile launches. In nearly every case without the OS, where a Sea Sparrow missile did not hit an air target, it circled the launching ship until running out of fuel, or it was destroyed by additional Sea Sparrow missiles automatically launched against it.

EVALUATION: SATISFACTORY. Based on the collective visual observations, the characteristics and capabilities of the testable ship Sea Sparrow Missile were consistent with the characteristics and capabilities contained in Navy SF software requirements. The evaluation of the Sea Sparrow missile as SATISFACTORY does not include the performance of the OS. The only Navy SF requirement here is the capability to use the Entity Control Interface to launch a Sea Sparrow missile at a designated target using the OS.

C-18. SENSORS – AN/SPY–1B/D

DATA REQUIRED: Radar ranges and delay between when the contact is first detected and when the contact track data are fully known. Radar status (on or off), off, if it is damaged. Radar model output including: target entity ID, entity type, bearing, range, speed, course, and aspect, for all targets, and altitude for air targets.

APPLICABLE SHIP CLASSES: CG–59 and DDG–51

ANALYSIS: Because of time constraints imposed by a continuous ED-1 scenario and the large size of the demonstration, the detailed data as described above was not recorded, but the AN/SPY–1B/D radar was turned on during most of ED-1 in order to detect and engage hostiles with the CG–59 and the DDG–51. The AN/SPY–1B/D radar was tested extensively during UVT and IT. All 16 AN/SPY–1B/D requirements that were tested during UVT passed for the CG–59 and DDG–51, though "best-guess" radar mast heights were used for the DDG–51 until exact heights are available.

EVALUATION: SATISFACTORY. Based on the collective visual observations, the characteristics and capabilities of the AN/SPY–1B/D were consistent with the characteristics and capabilities contained in Navy SF software requirements.

C-19. SENSORS – AN/SPS–49

DATA REQUIRED: Radar ranges and delay between when the contact is first detected and when the contact track data are fully known. Radar status (on or off), off, if it is damaged. Radar model output including: target entity ID, entity type, bearing, range, speed, course, aspect, and altitude for air targets. Bearing and range of any surface targets detected.

APPLICABLE SHIP CLASSES: CG–59 and CVN–68

ANALYSIS: Because of time constraints imposed by a continuous ED-1 scenario and the large size of the demonstration, the detailed data as described above were not recorded, but the AN/SPS–49 radar was turned on during most of ED-1 in order to detect and engage hostiles with the CG–59 and the CVN–68. The AN/SPS–49 radar was tested extensively during UVT and IT. All 15 AN/SPS–49 requirements that were tested during UVT passed for the CG–59. It was not tested again for the CVN–68 since the same parameters were used.

EVALUATION: SATISFACTORY. Based on the collective visual observations, the characteristics and capabilities of the AN/SPS–49 were consistent with the characteristics and capabilities contained in Navy SF software requirements.

C-20. SENSORS – AN/SPS–55

DATA REQUIRED: Radar ranges and delay between when the contact is first detected and when the contact track data are fully known. Radar status (on or off), off, if it is damaged. Radar model output including: target entity ID, entity type, bearing, range, speed, course, and aspect for surface targets. Bearing and range of any air targets detected.

APPLICABLE SHIP CLASSES: CG–59 and DD–963

ANALYSIS: Because of time constraints imposed by a continuous ED-1 scenario and the large size of the demonstration, the detailed data as described above were not recorded, but the AN/SPS–55 radar was turned on during most of ED-1 in order to detect and engage hostiles with the CG–59 and the DD–963. The AN/SPS–55 radar was tested extensively during UVT and IT. All 16 AN/SPS–55 requirements that were tested during UVT passed for the CG–59 and DD–963 though "best-guess" radar mast heights were used for the DD–963 until exact heights are available.

EVALUATION: SATISFACTORY. Based on the collective visual observations, the characteristics and capabilities of the AN/SPS–55 were consistent with the characteristics and capabilities contained in Navy SF software requirements.

C-21. SENSORS – AN/SPS–67

DATA REQUIRED: Radar ranges and delay between when the contact is first detected and when the contact track data are fully known. Radar status (on or off), off, if it is damaged. Radar model output including: target entity ID, entity type, bearing, range, speed, course, and aspect for surface targets. Bearing and range of any air targets detected.

APPLICABLE SHIP CLASSES: DDG–51, CVN–68, and AOE–6

ANALYSIS: Because of time constraints imposed by a continuous ED-1 scenario and the large size of the demonstration, the detailed data as described above were not recorded, but the AN/SPS–67 radar was turned on during most of ED-1 in order to detect and engage hostiles with the DDG–51, CVN–68, and AOE–6. The AN/SPS–67 radar was tested extensively during UVT and IT. All 11 AN/SPS–67 requirements that were tested during UVT passed for the DDG–51, though "best-guess" radar mast heights were used until exact heights are available. It was not tested again for the CVN–68 or AOE–6 since the same parameters were used.

EVALUATION: SATISFACTORY. Based on the collective visual observations, the characteristics and capabilities of the AN/SPS–67 were consistent with the characteristics and capabilities contained in Navy SF software requirements.

C-22. SENSORS – AN/SPS–40

DATA REQUIRED: Radar ranges and delay between when the contact is first detected and when the contact track data are fully known. Radar status (on or off), off, if it is damaged. Radar model output including: target entity ID, entity type, bearing, range, speed, course, aspect, and altitude for air targets. Bearing and range of any surface targets detected.

APPLICABLE SHIP CLASSES: DD–963

ANALYSIS: Because of time constraints imposed by a continuous ED-1 scenario and the large size of the demonstration, the detailed data as described above were not recorded, but the AN/SPS–40 radar was turned on during most of ED-1 in order to detect and engage hostiles with the DD–963. The AN/SPS–40 radar was tested extensively during UVT and IT. All 12 AN/SPS–40 requirements that were tested during UVT passed for the DD–963, though "best-guess" radar mast heights were used until exact heights are available.

EVALUATION: SATISFACTORY. Based on the collective visual observations, the characteristics and capabilities of the AN/SPS–40 were consistent with the characteristics and capabilities contained in Navy SF software requirements.

C-23. SENSORS – AN/SPS–48E

DATA REQUIRED: Radar ranges and delay between when the contact is first detected and when the contact track data are fully known. Radar status (on or off), off, if it is damaged. Radar model output including: target entity ID, entity type, bearing, range, speed, course, aspect, and altitude for air targets. Bearing and range of any surface targets detected.

APPLICABLE SHIP CLASSES: CVN–68

ANALYSIS: Because of time constraints imposed by a continuous ED-1 scenario and the large size of the demonstration, the detailed data as described above were not recorded, but the AN/SPS–48E radar was turned on during most of ED-1 in order to detect and engage hostiles with CVN–68. The AN/SPS–48E radar was tested extensively during UVT and IT. All but one of the 10 AN/SPS–48E requirements that were tested during UVT passed for the CVN–68, though "best-guess" radar mast heights were used until exact heights are available. The one failure (TR 025) had to do with a missing requirement. There was no requirement to ignore surface contacts even though the SPS–48E is an air-search radar.

EVALUATION: SATISFACTORY. Based on the collective visual observations, the characteristics and capabilities of the AN/SPS–48E were consistent with the characteristics and capabilities contained in Navy SF software requirements.

C-24. SENSORS – AN/SPS–64

DATA REQUIRED: Radar ranges and delay between when the contact is first detected and when the contact track data are fully known. Radar status (on or off), off, if it is damaged. Radar model output including: target entity ID, entity type, bearing, range, speed, course, and aspect for surface targets. Bearing and range of any air targets detected.

APPLICABLE SHIP CLASSES: AOE–6

ANALYSIS: Because of time constraints imposed by a continuous ED-1 scenario and the large size of the demonstration, the detailed data as described above were not recorded, but the AN/SPS–64 radar was turned on during most of ED-1 in order to detect and engage hostiles with AOE–6. The AN/SPS–64 radar was tested extensively during UVT and IT. All 11 AN/SPS–64 requirements that were tested during UVT passed for the AOE–6, though "best-guess" radar mast heights were used until exact heights are available.

EVALUATION: SATISFACTORY. Based on the collective visual observations, the characteristics and capabilities of the AN/SPS–64 were consistent with the characteristics and capabilities contained in Navy SF software requirements.

C-25. SENSORS – SH–60 LAMPS Mk III

DATA REQUIRED: Appearance and stability of SH–60 icon on two-dimensional display during launch and recovery from testable ship. Initial course and speed of LAMPS helicopter as a result of CCSIL messages, and changes as a results of additional CCSIL messages.

APPLICABLE SHIP CLASSES: CG–59, DDG–51, and DD–963

ANALYSIS: CCSIL messages needed to initiate this event were not successfully transmitted from NRaD to WISSARD during ED-1.

EVALUATION: UNSATISFACTORY.

APPENDIX D
MARINE CORPS SYNTHETIC FORCES SUPPORTING DATA

The following information is provided as supporting data for the Navy Synthetic Forces, provided as Analysis Items.

VIGNETTE 1: CAMP PENDLETON

SET UP						
Item	Unit	Intell.	Size:	Location	Activity	Type of Unit
V1.1	Red Force	Enemy	Plt. BMP DI	593807	Holding	BMP/DI
		Red Force Location 593807				
Expected Result		Entity created?				

SET UP						
Item	Unit	Intell.	Size:	Location	Activity	Type of Unit
V1.2	Red Force	Enemy	Plt. BMP DI	603815	Holding	BMP/DI
		Red Force Location 603815				
Expected Result		Entity created?				

SET UP						
Item	Unit	Intell.	Size:	Location	Activity	Type of Unit
V1.3	Red Force	Enemy	Plt. BMP DI	584856	Hold	BMP/DI
		Red Force Location 584856				
Expected Result		Entity created?				

SET UP						
Item	Unit	Intell.	Size:	Location	Activity	Type of Unit
V1.4	Red Force	Enemy	Plt. of Tanks	561865	Hold	Tank Plt.
		Red Force Location 561856 o/o move to 578846				
Expected Result		Result of movement:				

SET UP						
Item	Unit	Intell.	Size:	Location	Activity	Type of Unit
V1.5	Blue Force	Friendly	Co Task Force	Shipboard	Hold	MAGTF
		Movement from ship, to Bn CP @ 610780; movement from ship to shore, to 610780 movement from ship to LZ, to 610780				
Expected Result		Result of movement:				
		Result of embark/debark:				

SET UP						
Item	Unit	Intell.	Size:	Location	Activity	Type of Unit
V1.6	Blue Force	Friendly	Co Task Force	610780	Hold	MAGTF
		Blue Force MAGTF				
Expected Result						

Item	Unit	Location	Mission	Objective	Tasks
V1.7	V21	610780	Move to Contact	591813	Perform Route Recon.
		V21 – H59: move to the LOD			
Expected Result		Result of movement:			

Item	Unit	Location	Mission	Objective	Tasks
V1.8	All Units	610780	Move to Contact	593813	Move Tactically
		All Units – H59: Move to PL Black			
Expected Result		Result to movement:			

On Order: SET UP						
Item	Unit	Intell.	Size:	Location	Activity	Type of Unit
V1.9	Red Force	Enemy	Platoon	593807	Holding	BMP / DI
		Weapons Free to Engage				
Expected Result						

Item	Unit	Location	Mission	Objective	Tasks
V1.10	All Units	605788	Move to Contact	593807	Move Tactically
		All other Units – H59: Hold Fire & Halt			
Expected Result		Result of Hold Fire & Halt:			

Item	Unit	Location	Mission	Objective	Tasks
V1.11	W46	605788	Move to Contact	593807	Perform attack by fire
		W46 – H59: ACTION: ( ): (Engage Enemy at 593807)			
Expected Result		Result of engagement:			

Item	Unit	Location	Mission	Objective	Tasks
V1.12	X72	605788	Move to Contact	602798	Occupy TOW Fire Position
		X72 – H59: ACTION ( ): (set up a firing position at 602798 & Engage)			
Expected Result		Result of occupy position:			

Item	Unit	Location	Mission	Objective	Tasks
V1.13	X72	605788	Move to Contact	602798	Occupy TOW Fire Position
		X72 – H59: hold your fire			
Expected Result					

Item	Unit	Location	Mission	Objective	Tasks
V1.14	W46	605788	Move to Contact	593808	Conduct Fire and Movement
		W46 – H59: Secure Enemy Firing Position			
Expected Result		Result of Fire and Movement:			

Item	Unit	Location	Mission	Objective	Tasks
V1.15	V21	602790	Move to Contact	591811	Move Tactically
		V21 – H59: move to Check Point Xray			
Expected Result		Result of Movement to Contact:			

Item	Unit	Location	Mission	Objective	Tasks
V1.16	All Units	605788	Move to Contact	591811	Move Tactically
		All Units – H59: move to Check Point Xray			
Expected Result		Result of Movement to Contact:			

Item	Unit	Location	Mission	Objective	Tasks
V1.17	W46	591811	Move to Contact	601813	Exe. Travel Overwatch
		w46 – H59: Move to Obj. Delta			
Expected Result		Result of Travel Overwatch:			

On Order: SET UP						
Item	Unit	Intell. Message	Size:	Location	Activity	Type of Unit
V1.18		Enemy Movement	Plt. BMP /DI	603815	Holding	BMP / DI
		Weapons Free to Engage				
Expected Result						

Item	Unit	Location	Mission	Objective	Tasks
V1.19	All Units	605788	Move to Contact	603815	Move Tactically
		All Units – H59: Hold Fire and Halt			
Expected Result		Result of Movement to Contact:			

Item	Unit	Location	Mission	Objective	Tasks
V1.20	W46	599814	Move to Contact	599814	Perform attack by fire
		W46 – H59: ACTION( ): (Engage Enemy at 603815)			
Expected Result		Result of engagement:			

Item	Unit	Location	Mission	Objective	Tasks
V1.21	X72	596813	Move to Contact	603815	Occupy TOW Fire Position
		X72 – H59: ACTION ( ): (set up a firing position at 603816 ?)			
Expected Result		Result of occupy position:			

Item	Unit	Location	Mission	Objective	Tasks
V1.22	W46	599814	Move to Contact	603815	Conduct Fire and Movement
		W46 – H59: Assault Enemy Position			
Expected Result		Result of Fire and Movement:			

Item	Unit	Location	Mission	Objective	Tasks
V1.23	All Units	605788	Move to Contact	596824	Move Tactically
		All Units – H59: Move to Check Point Yankee			
Expected Result		Result of Movement to Contact:			

VIGNETTE 1: PHASE LINE BLACK, TO PHASE LINE RED

Item	Unit	Location	Mission	Objective	Tasks
V1.24	V21	595825	Move to Contact	582838	Move Tactically
		V21 – H59; Move to Obj. Alpha			
Expected Result		Result of Movement to Contact:			

Item	Unit	Location	Mission	Objective	Tasks
V1.25	V21	595825	Move to Contact	582838	Move Tactically
		V21 – H59; Move to Phase line RED			
Expected Result					

On Order: SET UP						
Item	Unit	Intell.	Size:	Location	Activity	Type of Unit
V1.26	Red Force	Enemy	Plt. of Tanks	561865	Hold	Tank Plt.
		Weapons Free; Red Force Tanks Location 561856 move to 578846				
Expected Result						

On Order: SET UP						
Item	Unit	Intell.	Size:	Location	Activity	Type of Unit
V1.27	Red Force	Enemy	Plt. BMP/DI	576846	Hold	Tank Plt.
		Weapons Free to Fire on Blue Force at 583837				
Expected Result						

Item	Unit	Location	Mission	Objective	Tasks
V1.28	V21 & W46	585635	Movement to Contact	567844	Move Tactically
		V21 & W46 – H59: Move to Objective Bravo			
Expected Result		Result of Movement to Contact:			

Item	Unit	Location	Mission	Objective	Tasks
V1.29	V21 & W46	579840	Movement to Contact	588837	Withdraw under enemy pressure
		Move from 579840 to 582837			
Expected Result		Result of Movement to Contact			

On Order: SET UP					
Item	Unit	Location	Mission	Objective	Tasks
V1.30	RCAS/CAS	Shipboard	RCAS & CAS		RCAS & CAS
		Shipboard CAS CAS at 584856 Inf. RCAS at 576846 Tanks			
Expected Result					

Item	Unit	Location	Mission	Objective	Tasks
V1.31	W46	582836	Movement to Contact	567844	Occupy Fire Pos.
		W46 – H59: Clear in zone and move to Bn Obj Bravo.			
Expected Result					

Item	Unit	Location	Mission	Objective	Tasks
V1.32	X72	583838	Move to Contact	573849	Occupy Fire. Position
		X72 – H59: Clear in Zone and move to Bn Obj. Charlie			
Expected Result		Result of Movement to Contact:			

Item	Unit	Location	Mission	Objective	Tasks
V1.33	C45	583838	Move to Contact	588863	Occupy Fire Pos.
		C45 – H59: Clear in Zone and move to LF Obj. Golf			
Expected Result		Result of Movement to Contact:			

VIGNETTE 2 & 3: DELTA CORRIDOR & R400

SET UP						
Item	Unit	Intell.	Size:	Location	Activity	Type of Unit
V2.1	Red Force	Enemy	Plt. BMP/DI	862048	Hold	BMP/DI
		Red Force Location 862048, BMP/DI				
Expected Result						

SET UP						
Item	Unit	Intell.	Size:	Location	Activity	Type of Unit
V2.2	Red Force	Enemy	Plt. BMP/DI	867055	Hold	BMP/DI
		Red Force Location 867065, BMP/DI				
Expected Result						

SET UP						
Item	Unit	Intell.	Size:	Location	Activity	Type of Unit
V2.3	Red Force	Enemy	Plt. Tanks	875995	moving	BMP/DI
		Red Force at 895995 to Ambush Blue at 875990				
Expected Result						

SET UP						
Item	Unit	Intell.	Size:	Location	Activity	Type of Unit
V2.4	Red Force	Enemy	Plt. Tanks	902918	Moving	Tanks Plt.
		Red Force Tanks at 902918				
Expected Result						

SET UP						
Item	Unit	Intell.	Size:	Location	Activity	Type of Unit
V2.5	Red Force	Enemy	Plt. BMP/DI	935965	Moving	BMP/DI
		Red Force Mech Inf. @ 935965				
Expected Result						

SET UP						
Item	Unit	Intell.	Size:	Location	Activity	Type of Unit
V2.6	Red Force	Enemy	Squad	939975	Defend	Inf. Squad
		Red Force Inf. @ 939975 w/ Bunker				
Expected Result						

SET UP						
Item	Unit	Intell.	Size:	Location	Activity	Type of Unit
V2.7	Red Force	Enemy	Plt. BMP/DI	815106	Ambush	BMP/DI
		Red Force Location 815106: Inf. & BMP				
Expected Result						

SET UP						
Item	Unit	Intell.	Size:	Location	Activity	Type of Unit
V2.8	Red Force	Enemy	Plt. BMP/DI	895995	Ambush	BMP/DI
		Red Force Location 895995 Inf. & BMP				
Expected Result						

SET UP						
Item	Unit	Intell. Msg.	Size:	Location	Activity	Type of Unit
V2.9	AAD		1ea. ZSU 23–4	907966		
		1ea. ZSU 23–4, AAD System				
Expected Result						

SET UP						
Item	Unit	Intell.	Size:	Location	Activity	Type of Unit
V2.10	Blue Force	MAGTF	Co. (+)	781159	Hold	Mech Co.
		USMC MAGTF @ 781159				
Expected Result						

Item	Unit	Location	Mission	Objective	Tasks
V2.11	V21	781159	Move to Contact	787164	Perform Route Recon.
		V21 – H59 move to the LOD			
Expected Result					

Item	Unit	Location	Mission	Objective	Tasks
V2.12	All Units	781159	Move to Contact	799115	Move Tactically
		All Units – H59 Move to PL Yellow			
Expected Result		Result of Movement to Contact			

On Order: SET UP						
Item	Unit	Intell. Msg.	Size:	Location	Activity	Type of Unit
V2.13				815106		
		Weapons Free for Red Force @ 815106				
Expected Result						

Item	Unit	Location	Mission	Objective	Tasks
V2.14	All Units	800115	Move to Contact	799115	Move Tactically
		All Units – H59 Hold & Halt			
Expected Result		Result of Movement to Contact			

Item	Unit	Location	Mission	Objective	Tasks
V2.15	W46	802110	Move to Contact	812114	Perform attack by fire
		W46 – H59 Move. to 812114 Engage Suspected Enemy at 815106			
Expected Result		Result of Movement to Contact & Engagement:			

Item	Unit	Location	Mission	Objective	Tasks
V2.16	X72	802109	Move to Contact	805115	Occupy TOW Fire Position
		X72 – H59 set up a firing position at 805115, & Engage the Enemy			
Expected Result					

Item	Unit	Location	Mission	Objective	Tasks
V2.17	W46	812114	Move to Contact	815105	Conduct Fire and Movement
		W46 – H59 Destroy Enemy Position			
Expected Result					

VIGNETTE 2: PHASE LINE YELLOW, TO PHASE LINE ORANGE

Item	Unit	Location	Mission	Objective	Tasks
V2.18	V21	787164	Move to Contact	Pl. Orange	Move Tactically
		V21 – H59 move to Phase Line Orange			
Expected Result					

Item	Unit	Location	Mission	Objective	Tasks
V2.19	V21	850085	Move to Contact	878090	Move Tactically
		V21 – H59 Establish Blocking Position at 878090			
Expected Result					

Item	Unit	Location	Mission	Objective	Tasks
V2.20	W46	813	Move to Contact	866084	Execute Travel Overwatch
		w46 – H59 Move to Obj. Victor			
Expected Result					

Item	Unit	Location	Mission	Objective	Tasks
V2.21	X72	813	Move to Contact	858078	Move Tactically
		X72 – H59 Occupy Firing Position at Hill 2508			
Expected Result					

Item	Unit	Location	Mission	Objective	Tasks
V2.22	C45	813	Move to Contact	847075	Move Tactically
		C45 – H59 move to Phase Line Orange & SET UP Firing Pos.			
Expected Result					

VIGNETTE 3: PHASE LINE ORANGE, TO PHASE LINE GREEN

On Order: SET UP					
Item	Unit	Location	Mission	Objective	Tasks
V3.1	Tm Taurus	835087	Helo Assault	LZ Hawk	disembark Fr. AAV
		Team. Taurus disembark from the AAV @ LZ Penguin: 835087			
Expected Result		Result of Debark:			

Item	Unit	Location	Mission	Objective	Tasks
V3.4	V21	878090	Move to Contact	878001	Move Tactically
		V21 – H59; Move to Obj. Zulu			
Expected Result					

Item	Unit	Location	Mission	Objective	Tasks
V3.5	All Units	853085	Move to Contact	870004	Move Tactically
		All units – H59; follow in trace of V21 to Phase Line Green			
Expected Result					

On Order: SET UP						
Item	Unit	Intell. Msg.	Size:	Location	Activity	Type of Unit
V3.6				862048		
		Weapons Free for Red Force @ 862048				
Expected Result						

Item	Unit	Location	Mission	Objective	Tasks
V3.7	V21	867055	Movement to Contact	867064	Withdraw under enemy pressure
		Move from 867055 to 874064			
Expected Result					

Item	Unit	Location	Mission	Objective	Tasks
V3.8	All Units	860085	Move to Contact	860085	Screen Operations
		All Units – H59 Hold Fire and Halt			
Expected Result					

Item	Unit	Location	Mission	Objective	Tasks
V3.9	W46	865070	Movement to Contact	877	Perform Attack by Fire
		W46 – H59 move to hill 2419 and Suppress Enemy Ambush			
Expected Result					

Item	Unit	Location	Mission	Objective	Tasks
V3.10	X72	863073	Movement to Contact	871063	Occupy Fire Pos.
		X72 – H59 move to hill 2432, Suppress Enemy Ambush,			
Expected Result					

Item	Unit	Location	Mission	Objective	Tasks
V3.11	X72	871063	Move to Contact	871063	Occupy Fire Pos.
		X72 – H59 Cease Fire			
Expected Result					

Item	Unit	Location	Mission	Objective	Tasks
V3.12	W46	877	Move to Contact	862048	Conduct Fire and Movement
		W46 – H59 Assault Enemy Position			
Expected Result					

On Order: SET UP						
Item	Unit	Intell.	Size:	Location	Activity	Type of Unit
V3.13	Red Force	Enemy	BMP/DI	875995	moving	BMP/DI
		Weapons Free; Red Force at 895995 to Ambush Blue at 875990				
Expected Result						

On Order: SET UP						
Item	Unit	Intell.	Size:	Location	Activity	Type of Unit
V3.14	Red Force	Enemy	BMP/DI	902918	Moving	Tanks Plt.
		Weapons Free; Red Force Tanks at 902918 move to 882965				
Expected Result						

On Order: SET UP						
Item	Unit	Intell.	Size:	Location	Activity	Type of Unit
V3.15	Red Force	Enemy	BMP/DI	935965	Moving	BMP/DI
		Weapons Free; Red Force Mech Inf. moves from 935965 to 893969				
Expected Result						

On Order: SET UP						
Item	Unit	Intell.	Size:	Location	Activity	Type of Unit
V3.16	Red Force	Enemy	Squad	939975	Defend	Inf. Squad
		Weapons Free; Red Force Inf. remains at 939975 w/ Bunker				
Expected Result						

Item	Unit	Location	Mission	Objective	Tasks
V3.17	V21	878001	Move to Contact	895950	Move Tactically
		V21 – H59 move to Obj. Zulu			
Expected Result					

Item	Unit	Location	Mission	Objective	Tasks
V3.18	All Units	865063	Move to Contact	Pl. Green	Move Tactically
		All Units move to Phase Line Green			
Expected Result					

VIGNETTE 3: PHASE LINE GREEN TO PHASE LINE RED

On Order: SET UP						
Item	Unit	Intell. Msg.	Size:	Location	Activity	Type of Unit
V3.19	AAD			907966		
		Weapons Free for Air Targets				
Expected Result						

Item	Unit	Location	Mission	Objective	Tasks
V3.20	V21	878003	Move to Contact	895950	Move Tactically
		V21 – H59 move from 870003 to 895950			
Expected Result					

Item	Unit	Location	Mission	Objective	Tasks
V3.21	All Units	873020	Move to Contact	Pl. Red	Move Tactically
		All Units move to Phase Line Red			
Expected Result					

On Order: SET UP					
Item	Unit	Location	Mission	Objective	Tasks
V3.22	Tm. Taurus	835087	Helo Assault	955965	Perform Helo. Movement
		Helo Assault from LZ Penguin 835087, to LZ Hawk 955965 Via the following Way Points 1. LZ Penguin @ 835087 2. 949089 3. 967039 4. 987960 5. LZ Hawk @ 955965			
Expected Result					

On Order: SET UP						
Item	Unit	Intell.	Size:	Location	Activity	Type of Unit
V3.23	Red Force	Enemy	Plt. BMP/DI	892969	Hold	BMP/DI
		Weapons Free; for Red Force @ 892969				
Expected Result						

Item	Unit	Location	Mission	Objective	Tasks
V3.24	V21	877980	Movement to Contact	868982	Withdraw under enemy pressure
		Move from 877980 to 868982			
Expected Result					

Item	Unit	Location	Mission	Objective	Tasks
V3.25	All Units	874994	Move to Contact	874994	Screen Operations
		All Units – H59 Hold Fire, Halt			
Expected Result					

Item	Unit	Location	Mission	Objective	Tasks
V3.26	W46	874988	Movement to Contact	874988	Perform Attack by Fire
		W46 – H59 Suppress Enemy Ambush In Place			
Expected Result					

On Order: SET UP					
Item	Unit	Location	Mission	Objective	Tasks
V3.27	Tm Taurus	LZ Hawk 955965	Seize Obj C @ 939977	Obj C 939977	USMC Attack
		Move fr. LZ Hawk to CP ÒRÓ @ 949962 Mortar SET UP @ CP ÒRÓ Plt. via USMC Attack/Single Envelopment Obj C Move to CP ÒEÓ @ 936966 Move to CP ÒFÓ @ 932962			
Expected Result					

Item	Unit	Location	Mission	Objective	Tasks
V3.28	X72	873992	Movement to Contact	873992	Occupy Fire Pos.
		X72 – H59 Engage Enemy @ 892969			
Expected Result					

On Order: SET UP					
Item	Unit	Location	Mission	Objective	Tasks
V3.29	RCAS/CAS		RCAS & CAS		RCAS & CAS
		IP Gypsum Ridge RCAS at 895995 Inf. CAS at 882965 Tanks			
Expected Result					

Item	Unit	Location	Mission	Objective	Tasks
V3.30	C45	872996	Move to Contact	888982	Assault an Enemy Pos.
		C45 – H59 Destroy Enemy Infantry Firing Position, @ 892969			
Expected Result					

Item	Unit	Location	Mission	Objective	Tasks
V3.31	W46	892969	Move to Contact	882965	Assault an Enemy Pos.
		W46 – H59 Assault Enemy Position @ 892969, and Secure 882968			
Expected Result					

Item	Unit	Location	Mission	Objective	Tasks
V3.32	V21	868982	Move to Contact	885946	Move Tactically
		V21 – H59 move to PL Red			
Expected Result					

Item	Unit	Location	Mission	Objective	Tasks
V3.33	All Units	870990	Move to Contact	Pl. Red	Move Tactically
		All Units move to Phase Line Red			
Expected Result					

Item	Unit	Location	Mission	Objective	Tasks
V3.34	X72 & G14	874980	Move to Contact	932962	Move Tactically
		X72 & G14 – H59 move to Obj Foxtrot			
Expected Result					

Item	Unit	Location	Mission	Objective	Tasks
V3.35	All Units	885946	Move to Contact	Pl. Red	Move Tactically
		All units halt north of Phase Line Red			
Expected Result					

PHASE 5. PHASE LINE RED TO BATTALION OBJECTIVE H

Item	Unit	Location	Mission	Objective	Tasks
V3.36	V21	895950	Movement to contact	891914	Move Tactically
		V21 – H59 move to Obj Quebec			
Expected Result					

Item	Unit	Location	Mission	Objective	Tasks
V3.37	W46 & C45	874990	Movement to contact	887923	Move Tactically
		W46 & C45 – H59 move to 887923			
Expected Result					

Item	Unit	Location	Mission	Objective	Tasks
V3.38	G14	874990	Movement to contact	880928	Move Tactically
		G14 – H59 Seize Obj Hotel			
Expected Result					

APPENDIX E
AIR FORCES SYNTHETIC FORCES SUPPORTING DATA

WISSARD CONFIGURATIONS

The specific hardware configuration utilized at WISSARD for the AFSF and AirSAF consisted of:

1. Blue Air: SGI R4000 pocket system running WISSARD Air SF;
2. Red Air: SGI R4000 pocket system running WISSARD Air SF;
3. Ground Targets: SGI R4000 pocket system running MCSF;
4. Data Logger: SGI R4000;
5. Plan View Display: SGI R3000 (NRaD 2-D PVD version);
6. Ordnance Server: SGI R3000 switched to SGI R4400;
7. IFOR FWA: 2 x SGI R4400;
8. IFOR RWA: 2 x SGI R4400;
9. AFSF: SGI R4400;
10. AFSF: SUN Sparc 20.

APPENDIX F
CONFIGURATION DIAGRAMS

The configuration diagrams are provided in the file called: DCA_AppendixF, which is located in the STOW_REPORTS directory on froggie. There are thirteen diagrams in this file with page numbers 115 through 127.

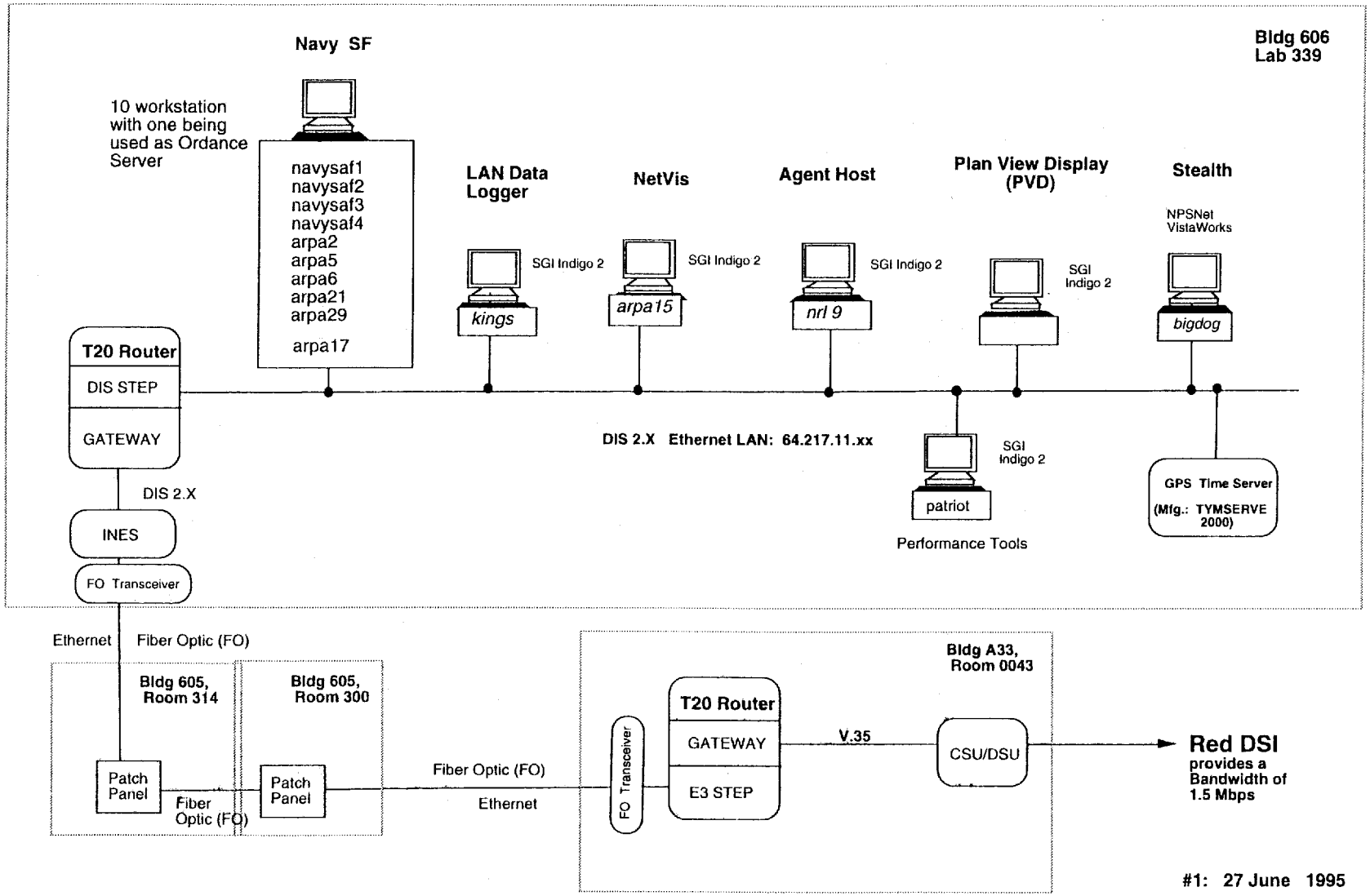

Figure F-1. Classified electrical and fiber-optic connectivity at NRaD during Day 4 for ED-1.

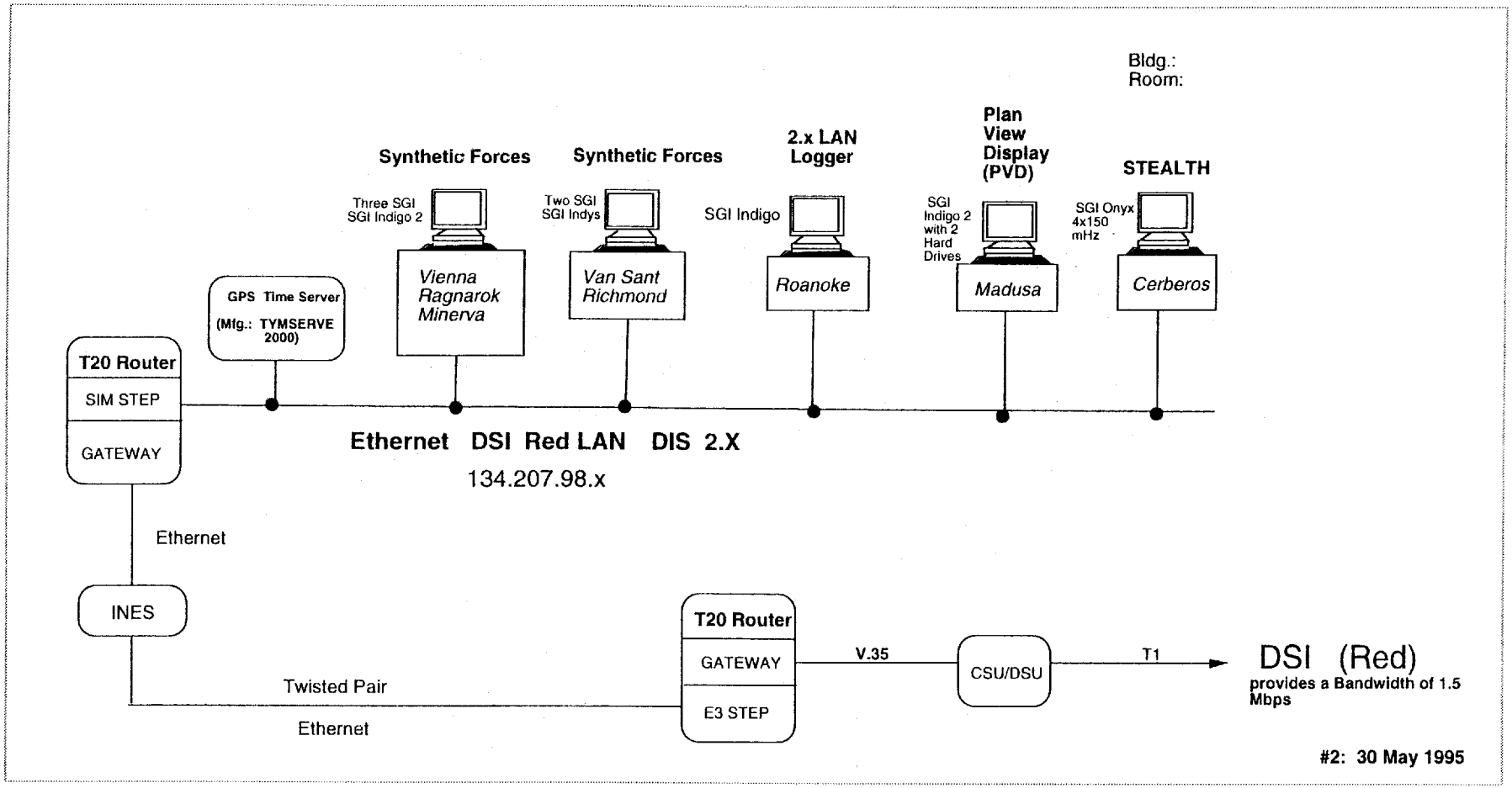

Figure F-2. Classified hardware configuration at IDA during Day 4 for ED–1.

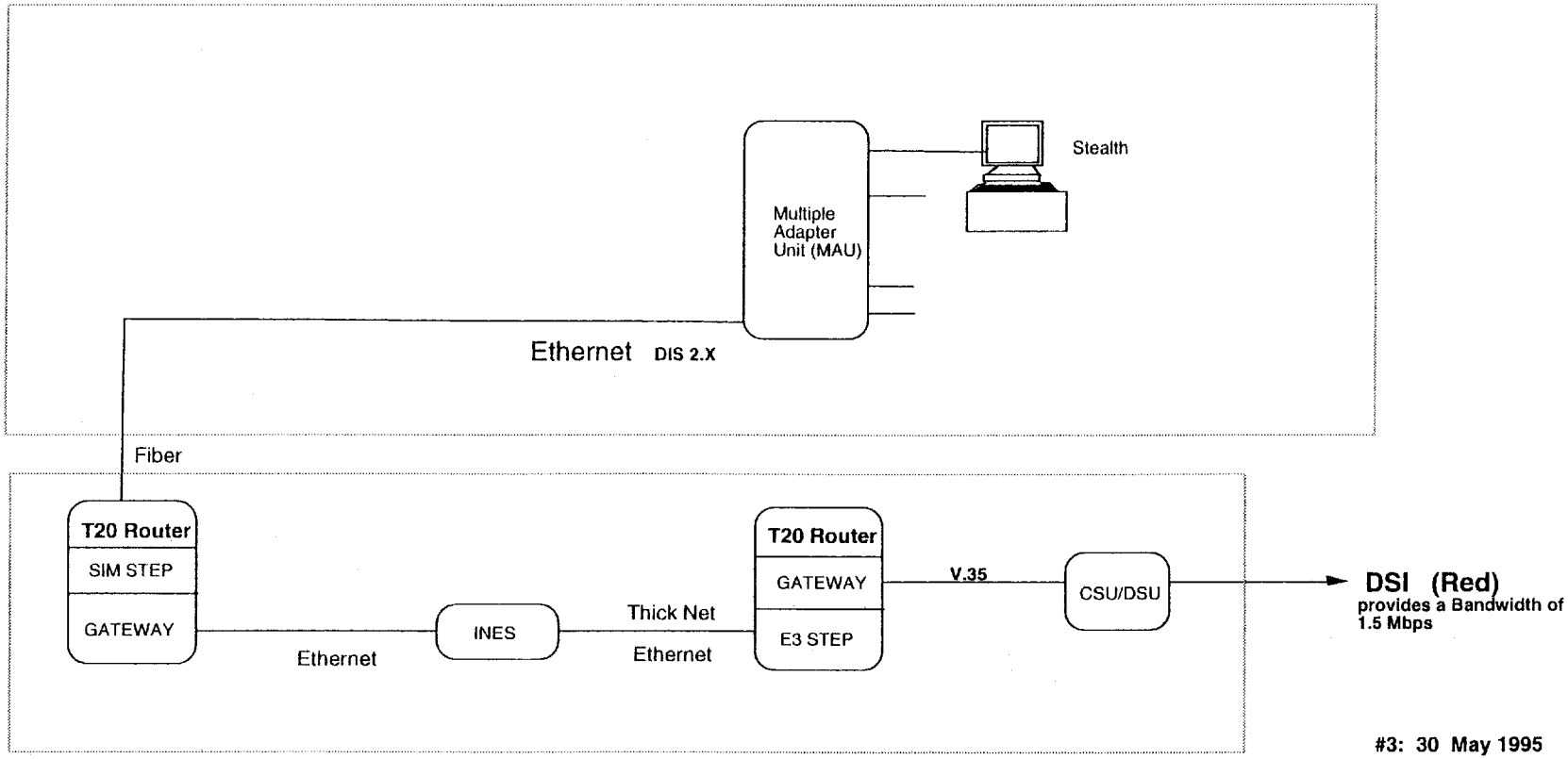

Figure F-3. Configuration at USACOM during Day 4 for ED-1.

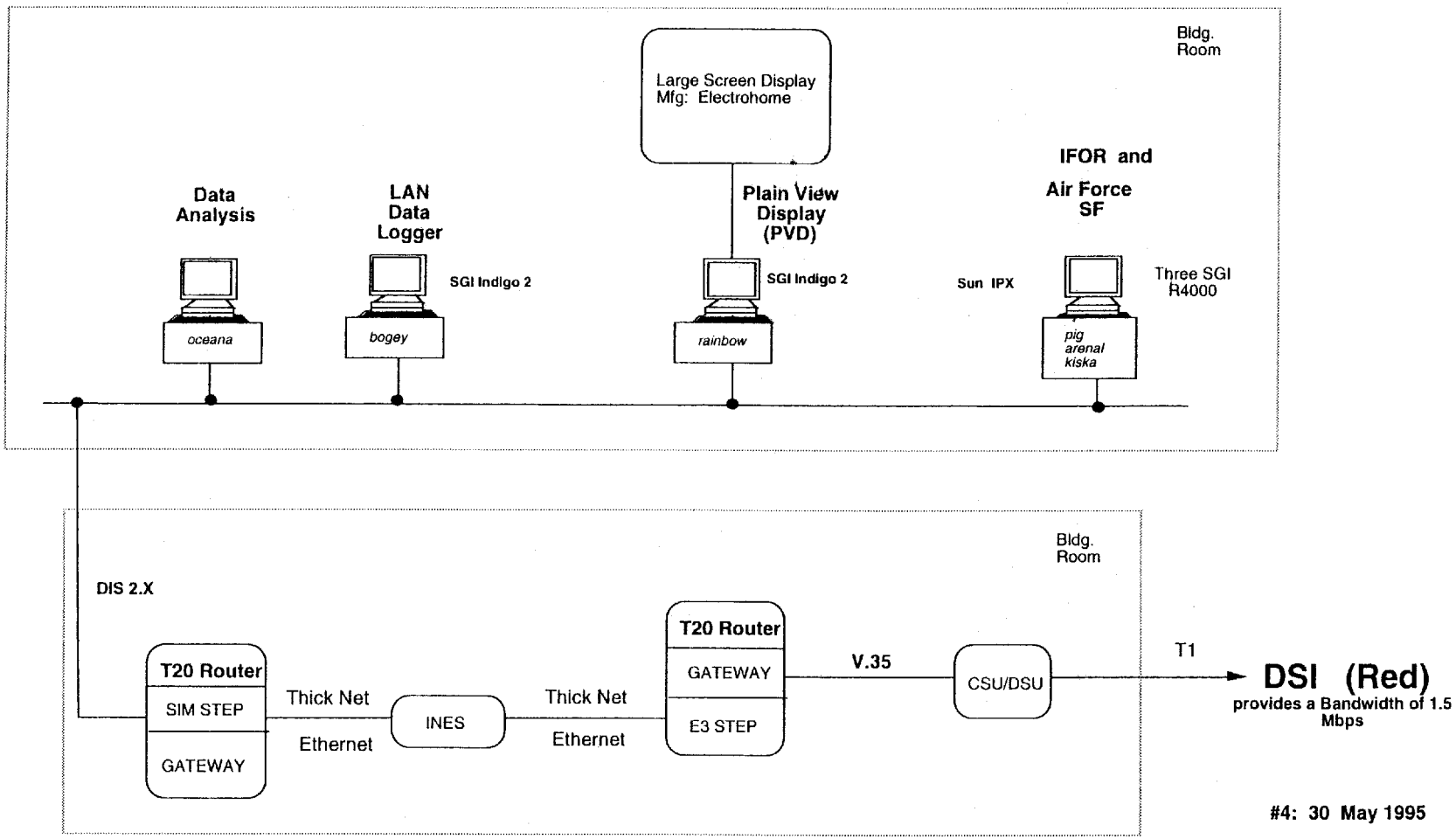

Figure F-4. Configuration at WISSARD during Day 4 for ED-1.

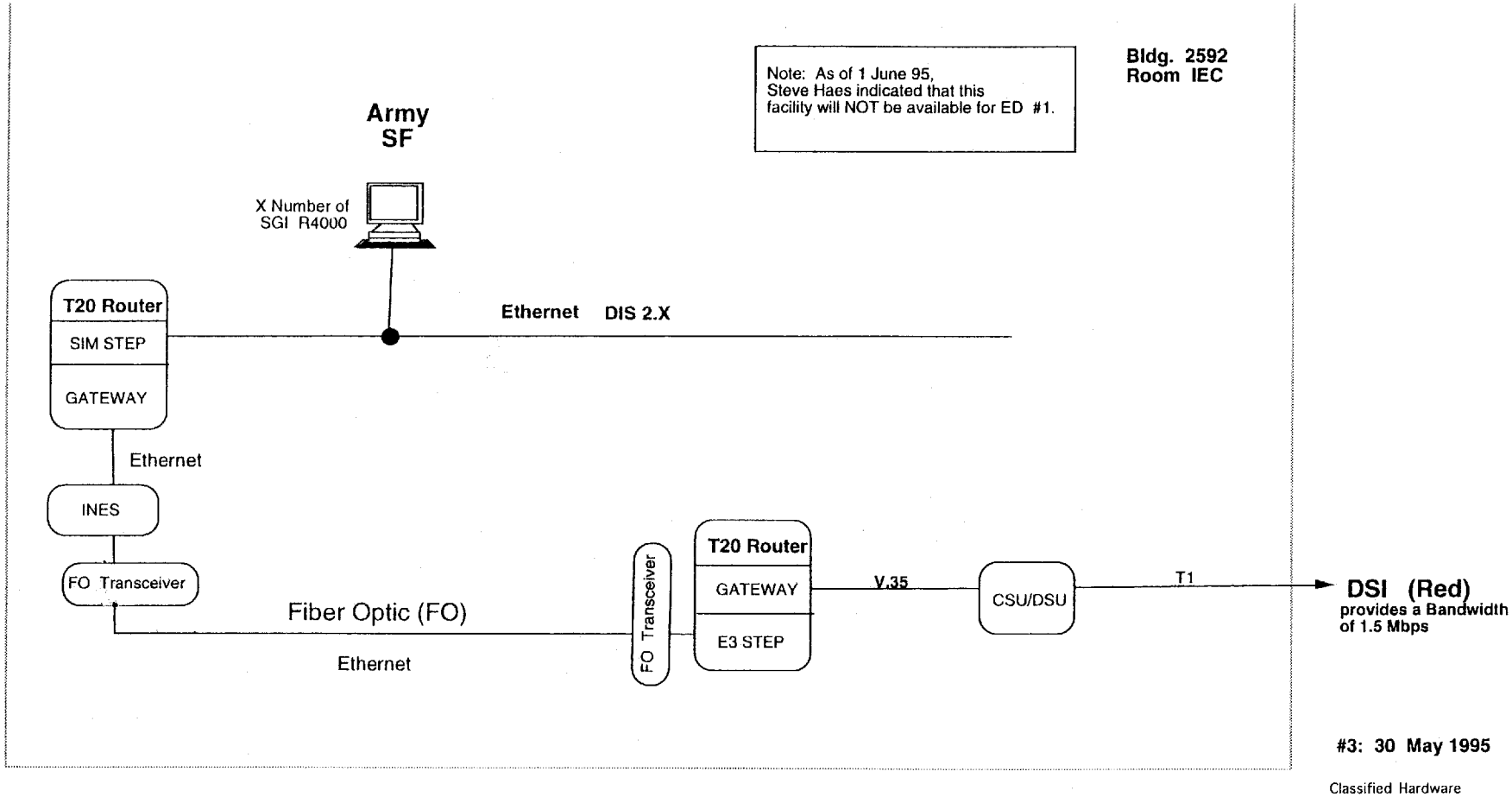

Figure F-5. Configuration at TEC during Day 4 for ED-1.

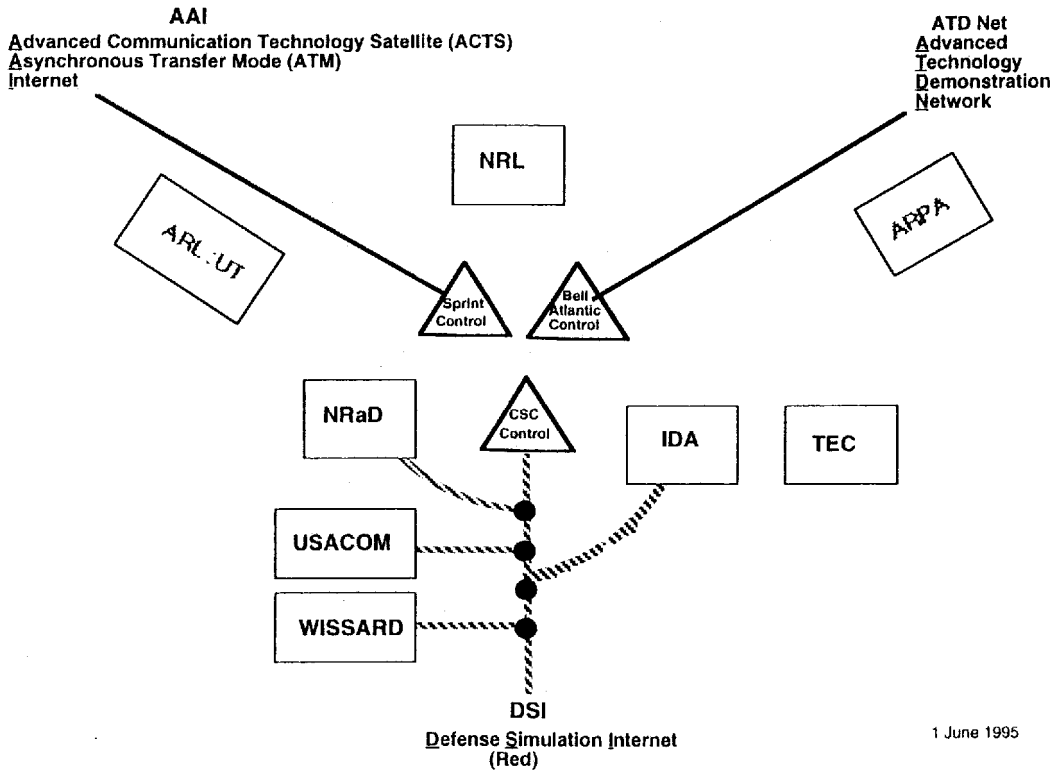

Figure F-6. Classified site diagram.

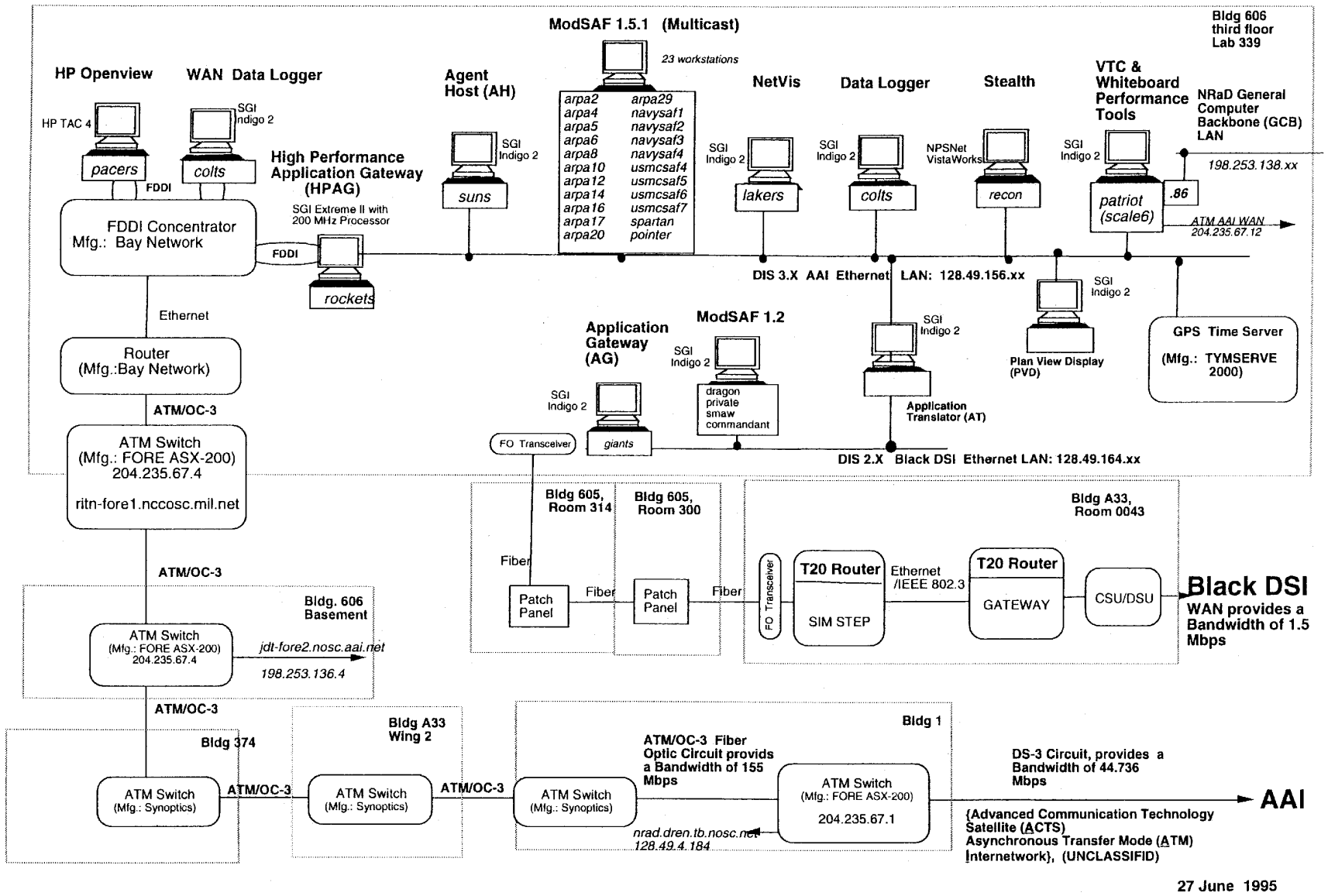

Figure F-7. Unclassified hardware configuration at NRaD for ED-1.

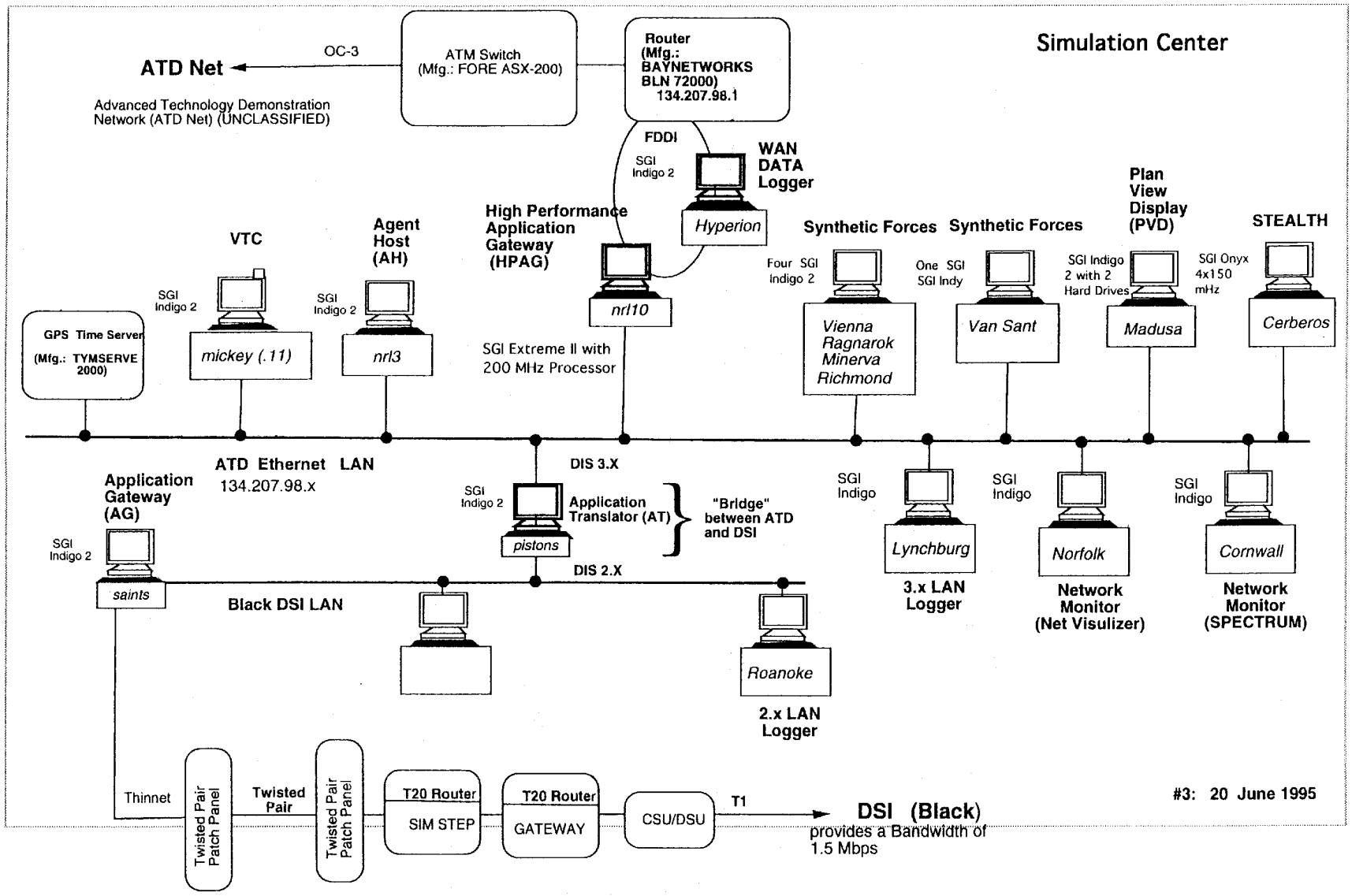

Figure F-8. Unclassified hardware configuration at IDA for ED-1.

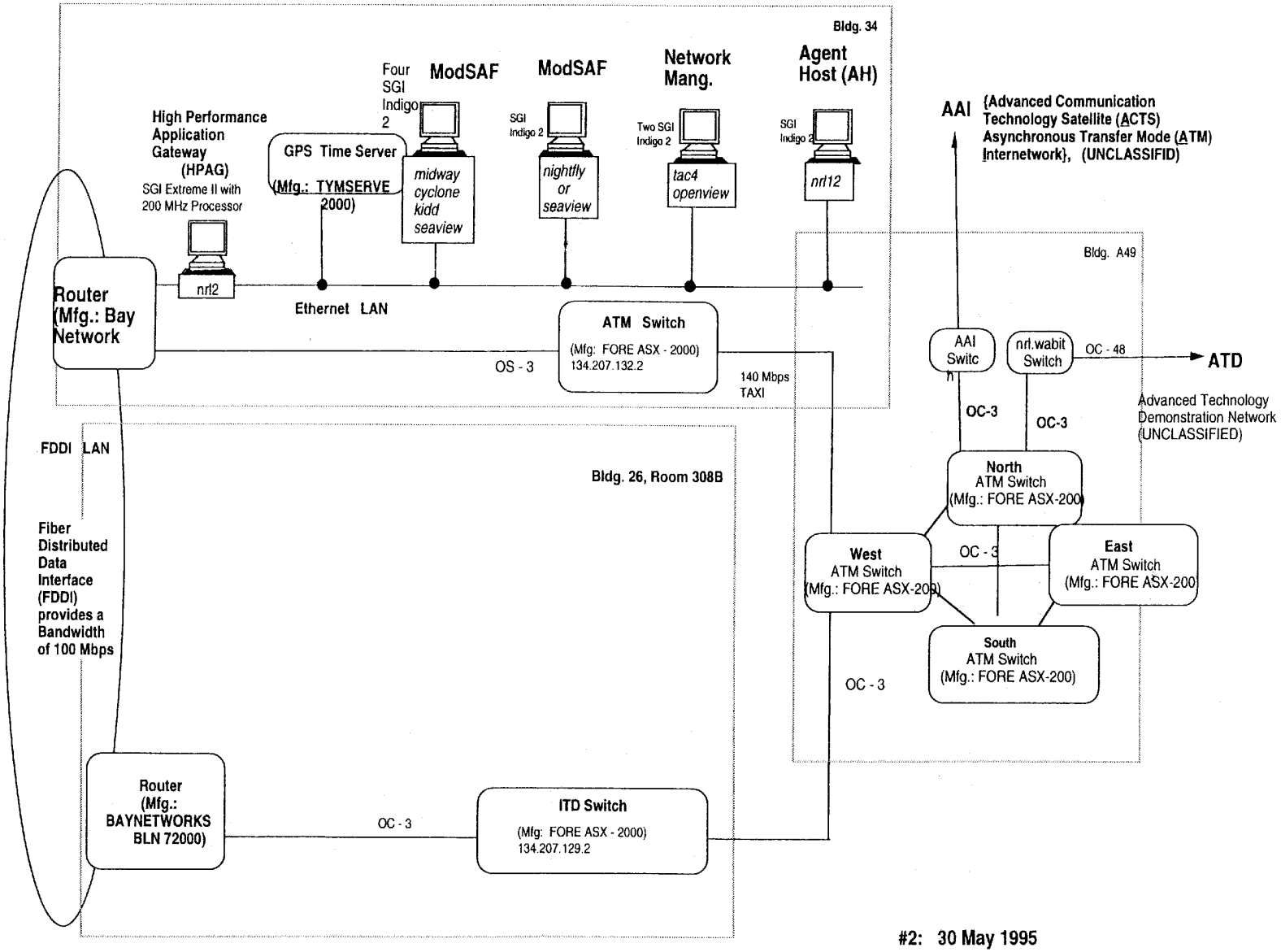

Figure F-9. Unclassified hardware configuration at NRL for ED-1.

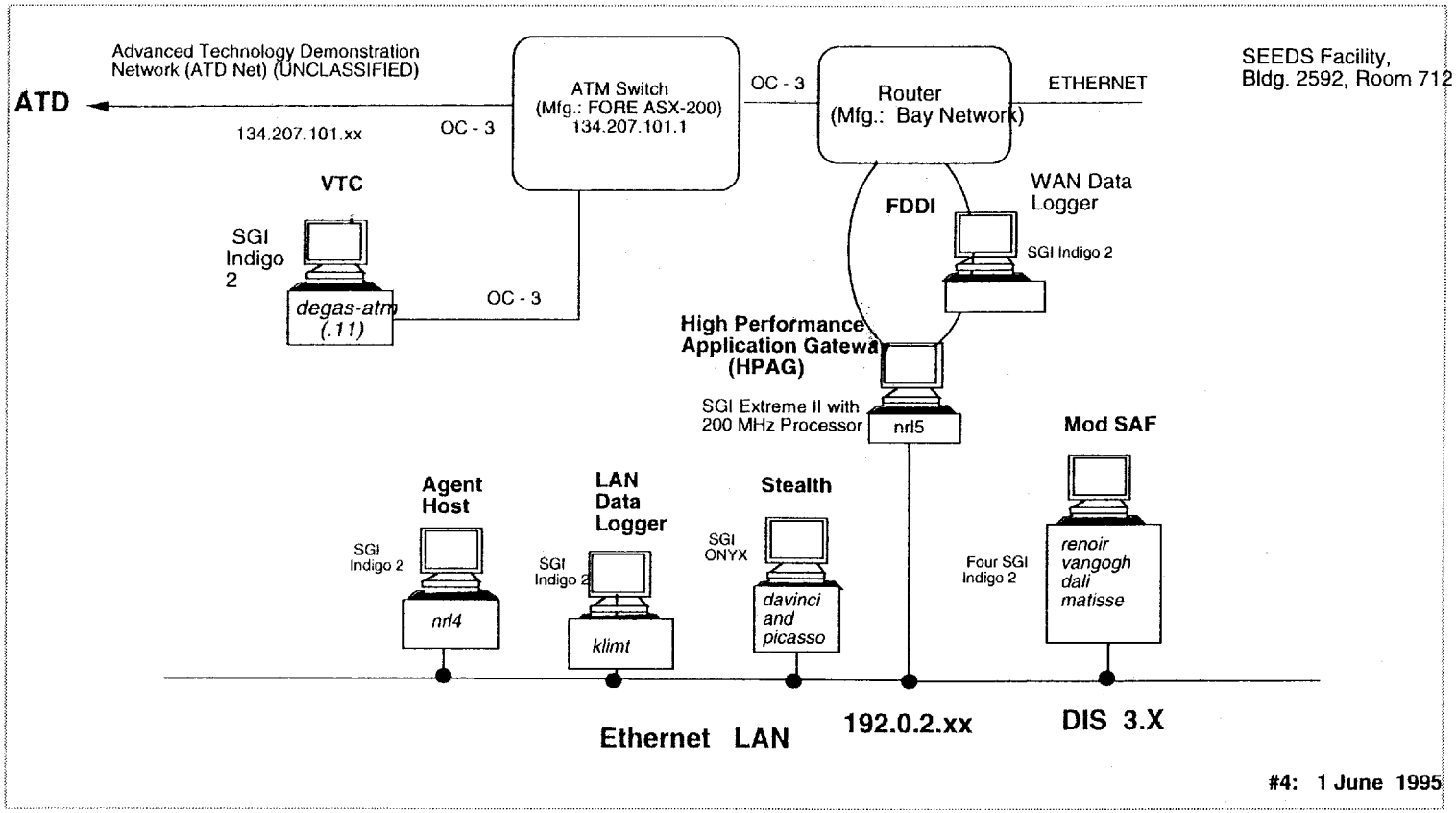

Figure F-10. Unclassified hardware configuration at TEC for ED-1.

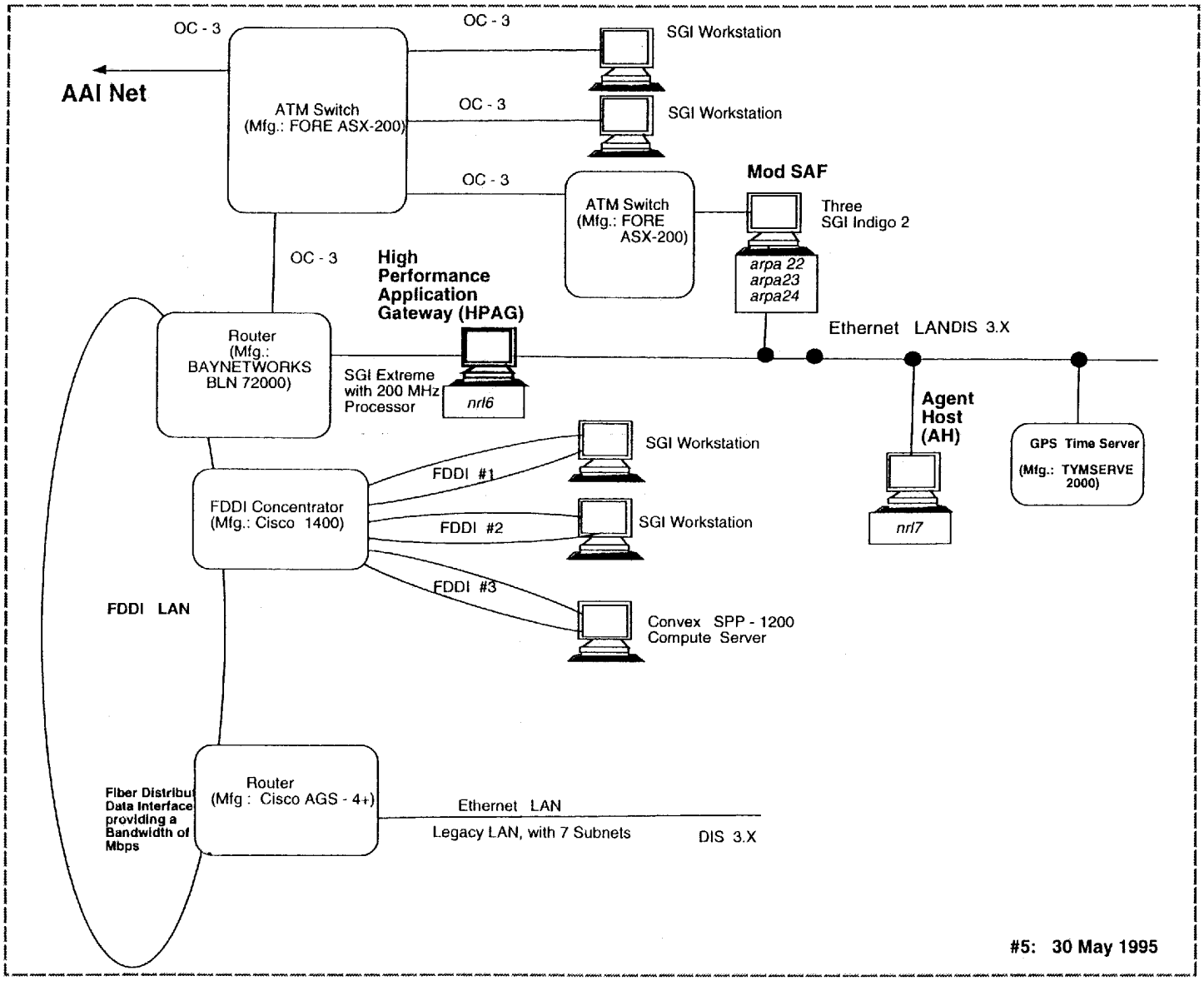

Figure F-11. Unclassified hardware configuration at ARL:UT for ED-1.

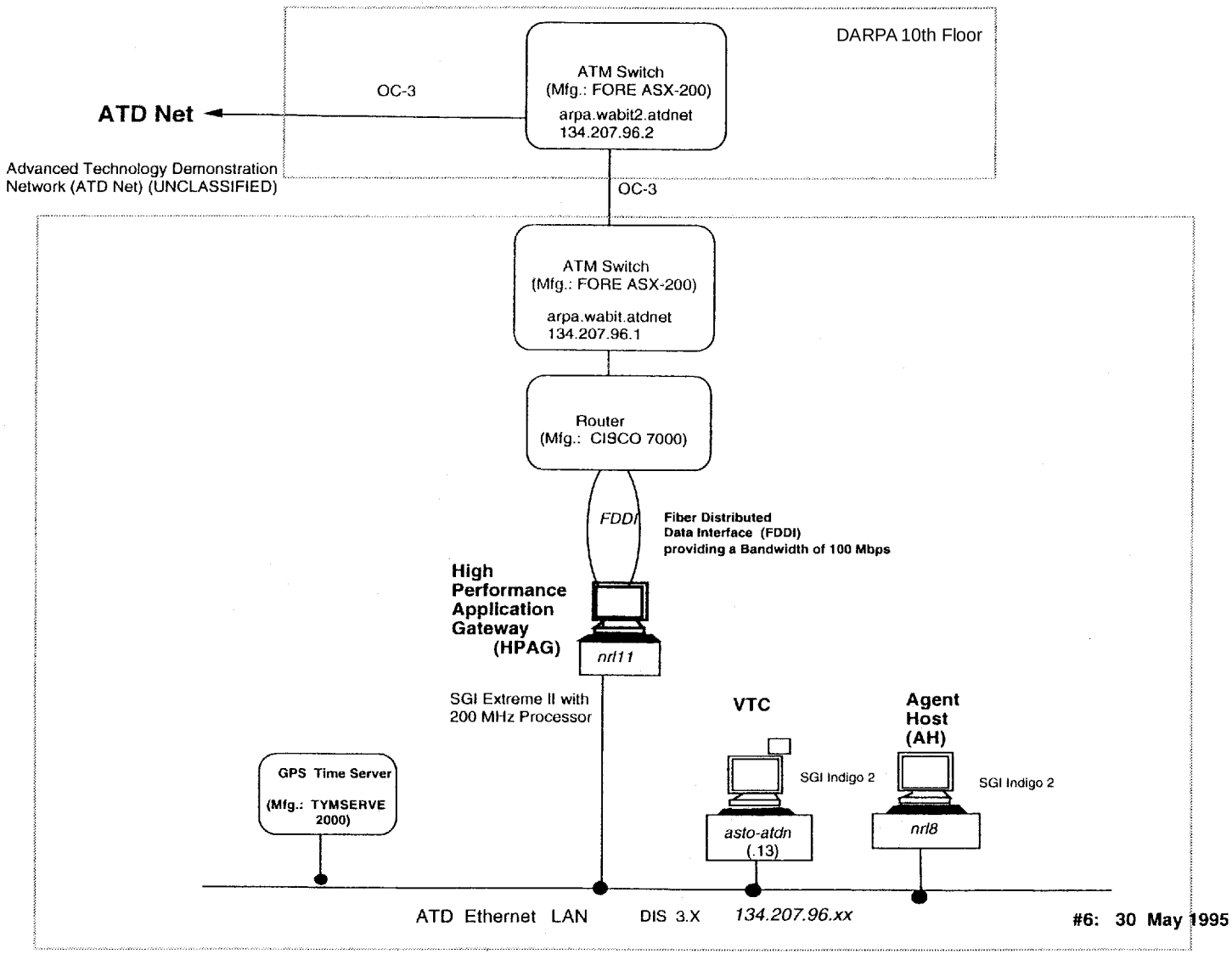

Figure F-12. Unclassified hardware configuration at DARPA for ED-1.

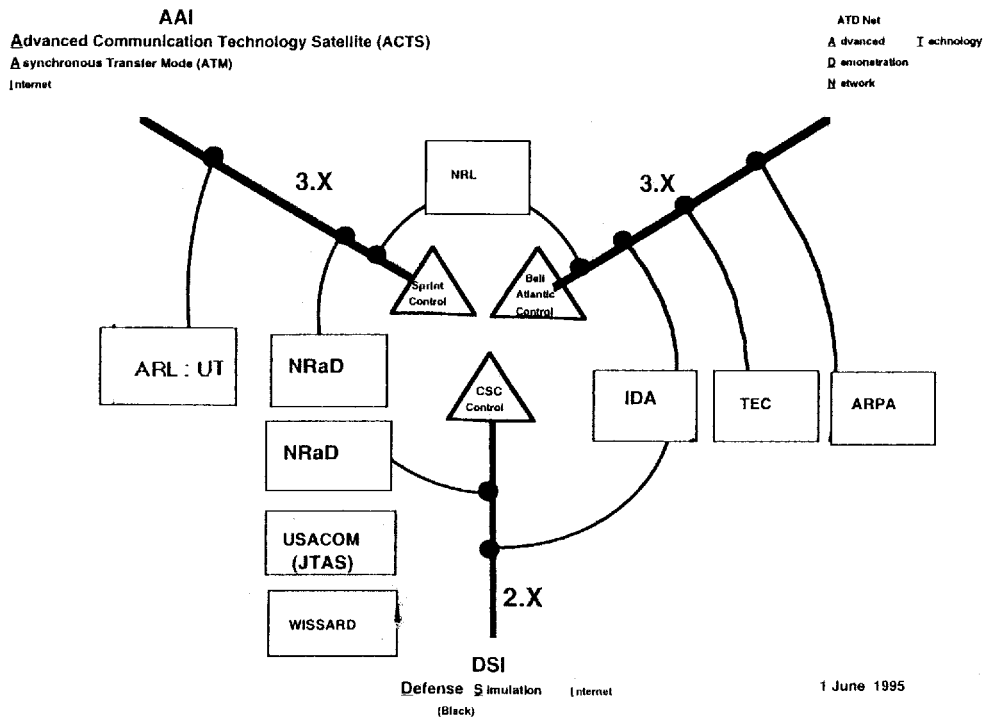

Figure F-13. Unclassified site diagram.