Technical Report 1620
October 1993

Development and Fabrication of the Fiber Optic MicroCable™

J. H. Dombrowski
W. A. Kerr
S. J. Cowen

Approved for Public Release; Distribution is Unlimited

SUMMARY

OBJECTIVE

Describe the development and fabrication of the Fiber Optic MicroCable™ (FOMC™).

BACKGROUND

It was recognized in the 1970s that a fiber-optic replacement for the metallic torpedo wireguide (used to communicate with heavyweight torpedoes) would provide significant benefits in both the fields of undersea weapons and unmanned undersea vehicles. The small diameter and light weight of the optical fiber would permit a significant reduction in the volume and weight occupied by the deployable communications link when stowed, the freedom from electromagnetic radiation would provide channel properties that were independent of whether the link was deployed or coiled, the seawater ground and associated noise pickup and emission would be eliminated, and the bandwidth would be greatly increased compared with the wire. The improved physical properties of the fiber-optic unit would make it attractive to back-fit existing weapons, allowing more fuel and warhead to be carried. Additionally, the vastly increased bandwidth of the optical fiber could be initially exploited to supplement the internal signal processing in the weapon with offboard processing and additional sensor information and, as reliability became accepted, offboard signal processing could eventually replace a significant amount of onboard electronics as well, resulting in a cheaper and smarter weapon since the shipboard processor could be made significantly more powerful than an onboard unit and was reusable. In the field of undersea vehicles, which typically require one or more video channels in addition to sonar and command/control signals, metallic wire has proved unapplicable, but an expendable fiber-optic link would provide the requisite communications channels in an elegant and cost-effective fashion.

To satisfy requirements for weapons and undersea vehicles, a highly effective and manufacturable fiber-optic replacement for metallic wireguide was developed by the Naval Command, Control and Ocean Surveillance Center, RDT&E Division (NRaD) over a chronological period which spanned approximately 11 years. The design is based upon a single communications-grade optical fiber reinforced with a thin annulus of resin-impregnated fiberglass to provide increased tensile strength, stiffness, and crush and abrasion resistance. While early prototypes deployed reliably during both laboratory and in-situ testing, they proved quite difficult to manufacture in long, continuous lengths. Initially, the units were excessively expensive and also difficult to precision-wind into deployable coils due to their wide tolerances in roundness and diameter. However, in the mid-1980s engineers in the Advanced Concepts Branch developed a radical new manufacturing process for constructing the fiber-optic elements based on ultraviolet-cured polymer resins. This approach permitted manufacturing processes to be developed that led to a commercially affordable product having superior physical and optical properties compared with its predecessors. The per-meter cost was reduced by a factor of 20 simultaneously. The new product was copyrighted Fiber Optic MicroCable™ or FOMC™ by the United States Government, both to emphasize its extremely small diameter compared with conventional fiber-optic cable and to set it apart by nomenclature. This technical report documents the manufacturing process developed by NRaD and subsequently transitioned into commercial production by the Navy Manufacturing Technology Program.

Prototyping and pilot production plants for fabricating FOMC were constructed and operated at NRaD. Two commercial facilities were subsequently constructed, in accordance with the Manufacturing Technology Program drawing package, by private industry as of the date of this technical report. Besides satisfying requirements for emerging military systems that are increasingly required to provide high performance in a cost-effective fashion, applications are being identified in offshore oil, transportation, law enforcement, and cable television that can benefit by the unique and cost-effective features provided by FOMC. The effort was awarded the Federal Laboratory Consortium Award for Technology Transfer in 1991. Developers in the Advanced Concepts Branch of NRaD believe that this endeavor serves as an excellent example of both technology transfer and dual-use technology, and as such will be of interest to a wide scope of technologists and policy-makers both inside and outside of government.

APPROACH

Two equally significant goals impacted the development of the FOMC. First, the FOMC design must meet the Navy's requirement for an expendable fiber-optic data link. Second, the plant must be able to manufacture the FOMC in large quantities economically. To meet these goals, a sufficiently advanced fabrication plant was constructed. When the FOMC design was completed and the fabrication technology established, a prototype manufacturing facility was built to fabricate the FOMC as well as test the FOMC for the Mk-48 Advanced Capability (ADCAP) Torpedo and other Navy programs.

CONCLUSION

This report describes how the FOMC has evolved. Part I discusses the technical aspects of the development of the FOMC—the research into and selection of raw materials, fabrication components, and fabrication methods. Materials selection, ultraviolet curing system, fiberglass yarn, adhesive, and adhesive/fiberglass compatibility research are discussed in Part I. Part II describes the design, construction, and operation of the FOMC Pilot Production Plant. FOMC manufacturing system setup procedure and operation, checks, shutdown, as well as problems that can be encountered in the manufacture of the FOMC are discussed in Part II. Clean-up procedures are presented at the end of this report.

CONTENTS

INTRODUCTION 1
BACKGROUND 2
APPROACH 2
PART I: FOMC RESEARCH AND DEVELOPMENT 3
DESIGN AND CONSTRUCTION OF THE RESEARCH AND TEST PLANT 3
MATERIALS SELECTION 4
ULTRAVIOLET CURING SYSTEM RESEARCH 4
FIBERGLASS YARN RESEARCH 7
ADHESIVE RESEARCH 8
ADHESIVE/FIBERGLASS COMPATIBILITY RESEARCH 11
OPTICAL FIBER SELECTION 12
FOMC FORMING AND FABRICATION CONCEPTS 14
Yarn Tension 14
Circular Comb Plate Eyelet Base Circle Diameter and Position of Circular Comb Plate 15
Forming Die Selection 15
Fabrication Hardware, Guide/Weaving Rod, and Guide Eyelet Material Selection 15
Forming Die, Wetting Tray, and Adhesive Temperature Control 17
PART II: FOMC FABRICATION PILOT PLANT 18
DESIGN FEATURES OF THE FOMC PILOT PRODUCTION FACILITY 18
PREPARATION AND STORAGE OF THE FOMC MATERIALS 20
Ultraviolet Curable Adhesive 20
Optical Fiber 21
Fiberglass Yarns 21
FOMC MANUFACTURING SYSTEM SETUP PROCEDURE 22
Initial Setup Procedure 22
Preoperation Setup Procedure 27
Fabrication Parameters 28

FOMC MANUFACTURING SYSTEM OPERATION 29

Startup Procedure 29

OPERATING CHECKS 31

Stop and Shutdown Procedure 32

PROBLEM CONTROL DURING OPERATION OF THE FOMC MANUFACTURING PLANT 33

Lamp Cooling 33

Yarn Breakage 34

Loss of Air Pressure 34

Failure of Traction Drive or Take-up Reel 35

Other Events 35

Yarn Reinsertion Procedure 35

FOMC MANUFACTURING SYSTEM CLEAN-UP PROCEDURE 36

Complete System Clean-up 37

APPENDIXES:

A. FOMC CHARACTERISTICS A-1

B. ULTRAVIOLET-CURING SYSTEM SPECIFICATION B-1

C. PRELIMINARY ADHESIVE TESTS C-1

D. OPTICAL FIBER SPECIFICATIONS D-1

E. FOMC OVERCOATING DEVELOPMENT E-1

F. FINAL CHANGES TO THE FOMC PILOT PRODUCTION PLANT F-1

FIGURES

1. Cross section of fiber-optic microcable 1

2. Research and test plant 3

3. Typical UV lamp/FOMC processor cross section 7

4. Comb plate and forming die positions 16

5. Circular comb plate and forming die positions 16

6. FOMC pilot production plant layout 18

7. Horizontal comb plate stringing patterns 23

8. Circular comb plate stringing patterns 25

9. Teflon adhesive guide 26

TABLES

1. Optical fiber core, fiberglass yarn, and forming die diameter relationships 8

2. FOMC fabrication adhesive temperatures 17

3. Adhesive type and operating parameters 28

INTRODUCTION

The advantages of optical fiber over metal wire for data and signal telemetry have encouraged the use of optical fibers for undersea tethers and other applications, especially torpedo guidance. One optical fiber can carry all the data and signal required for torpedo guidance, but, by itself, an optical fiber is not strong enough to withstand the physical effects of launching the torpedo and guiding it to the target. The Fiber Optic MicroCable (FOMC)™ was developed to provide a ruggedized cable structure based on a single optical fiber that could be used in the Mk-48 Advanced Capability (ADCAP) torpedo. The FOMC is small and flexible enough to be precision-coiled into deployment packages, yet strong and stiff enough to survive the launch of the torpedo and subsequent deployment.

Considerations included the ability to develop a manufacturing system to produce large volumes of FOMC in a relatively short period of time. Because the FOMC is used to guide a weapon, it is an expendable material, and cost had to be kept as low as practicable. And finally, all materials and technology necessary to manufacture the FOMC had to be available for the near future in the United States.

The final design of the FOMC is shown in figure 1. The optical fiber is in the center of the structure. It is surrounded by two layers of ultraviolet light (UV)-cured fiberglass-reinforced polymer (FRP) matrix. Although these two layers are applied in discrete manufacturing steps, the FRP matrix is bonded when the polymer is cured. Surrounding the FRP matrix is a layer of UV-cured polymer without fiberglass reinforcement. The physical and optical specifications of the FOMC are given in appendix A.

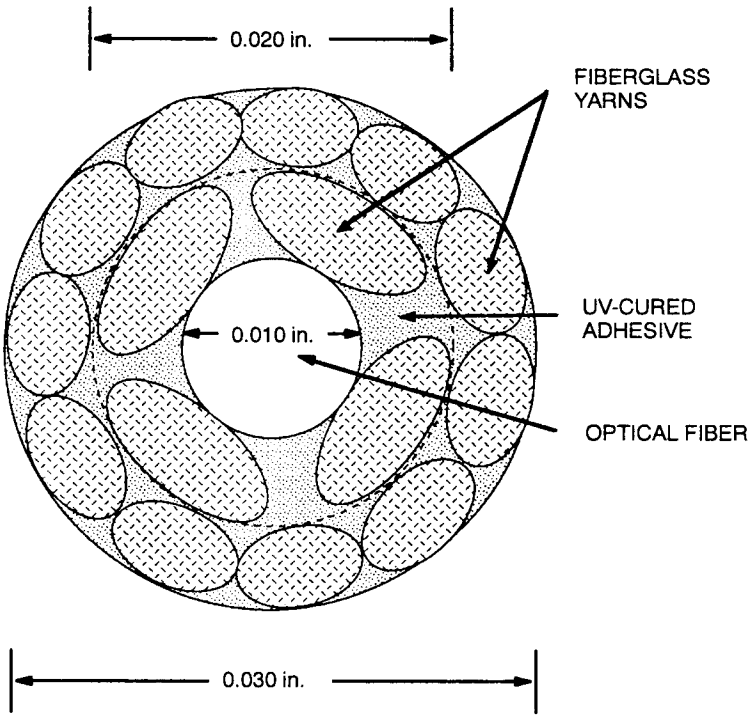

Figure 1. Cross section of fiber-optic microcable.

BACKGROUND

When the development of the FOMC was begun, current state-of-the-art cables were heat-cured FRP matrices. Due to the nature of the process, cable manufacturing was slow and the length of cable that could be manufactured without splicing pieces was approximately 5 kilometers. Since splicing techniques for FOMC had not been developed, the manufacturing length limit was an absolute limit on the usable cable length. Naval Command, Control and Ocean Surveillance Center (NCCOSC), RDT&E Division (NRaD), formerly the Naval Ocean Systems Center (NOSC), Code 946 used heat-cured microcable structures for several experimental programs and demonstrations prior to beginning development of the FOMC.

At the same time, UV-cured materials were being used as waterproofing, bonding, and protective coatings in commercial industries such as medical, automotive, furniture, flooring, and circuit board manufacture. UV-cured materials provide high water resistance, water vapor resistance, adhesion to other materials, and good flowing and leveling characteristics. In addition, UV-cured materials had fast cure rates at low temperatures and an effectively infinite pot life during manufacturing. For these reasons, FOMC development turned to UV-cured materials.

A contract to develop a fabrication method for the FOMC was let to Air Logistics Corporation early in the development. This contract was later terminated by the Government, but several important lessons were learned; especially relating to curing lamps, UV light intensity, curing speeds, and heat build-up within the UV curing lamps. These factors will be discussed in more detail later.

APPROACH

From its inception, the FOMC Development Program included two equally important goals. The first was to develop an FOMC design that met the Navy's operational requirements for an expendable fiber-optic data link. The second was to concurrently develop a manufacturing technology to produce the FOMC in large quantities at an economically acceptable cost. To meet both of these goals, it was decided to develop the FOMC, constructing a sufficiently advanced fabrication plant to allow realistic testing of materials, components, and techniques. When the FOMC design was completed and the fabrication technology established, a pilot manufacturing facility was built to complete the testing and development of the fabrication technology and to demonstrate complete FOMC fabrication, as well as to provide large quantities of FOMC for testing in the Mk-48 ADCAP Torpedo Program and other Navy programs.

Part I of this report discusses the technical aspects of the development of the FOMC; the research into and selection of raw materials, fabrication components, and fabrication method. Part II describes the design, construction, and operation of the FOMC Pilot Production Plant.

PART I: FOMC RESEARCH AND DEVELOPMENT

DESIGN AND CONSTRUCTION OF THE RESEARCH AND TEST PLANT

To test fabrication techniques, manufacturing components, and raw materials, a test facility was designed and built inside a 40-foot-long shipping container. The layout of this facility is shown in figure 2. This facility was designed to apply a single layer of FRP around an optical fiber in lengths up to 2 kilometers. This length and the single layer were considered sufficient to test concepts, components, and materials.

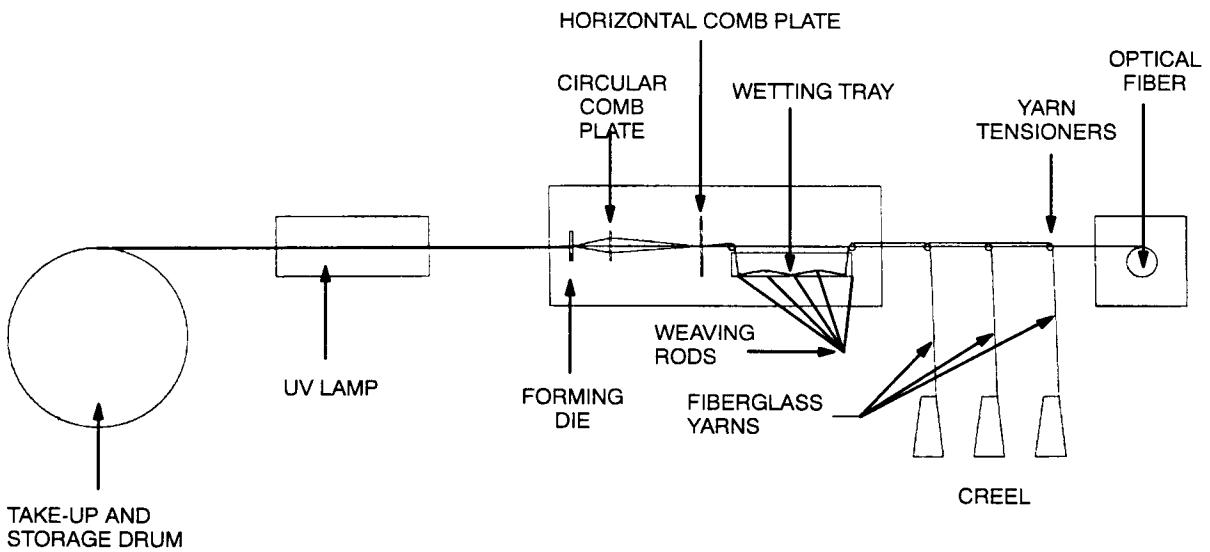

Figure 2. Research and test plant.

Yarn handling and wetting was performed by following standard industry practice. The yarn bobbins were located in a creel at the start of the fabrication line. Each individual yarn was pulled from the bobbin and passed through a tensioner prior to coming in contact with the adhesive in the wetting trays. The yarn was then weaved through a series of stainless steel rods within the adhesive bath. This weaving process was used to force air out of the yarn and adhesive into the yarn, fully impregnating the yarn with adhesive. The yarns were then guided through a series of ceramic eyelets, forming the yarns into a circular configuration concentric with the optical fiber core. Concurrent with the yarn deployment and wetting process, the optical fiber was pulled from its storage spool and guided through a series of sheaves that positioned it at the center of the structure prior to complete forming of the FOMC at the forming die. Initial contact between the yarns and the core occurred at the forming die where excess adhesive was squeezed from the composite matrix, and the final FOMC configuration was formed. The uncured composite structure was pulled through the UV light source where curing of the adhesive/composite occurred. The final FOMC product was level-wound in a single layer onto a take-up drum.

Prototype FOMC manufacturing was done in this facility for approximately 2 years. This facility was used for all the feasibility demonstrations leading to the construction of the FOMC Pilot Manufacturing Plant, which began operation in December 1988. The research and test facility continued to be used for testing of new materials until April 1991.

MATERIALS SELECTION

The primary components and materials (the UV-curing system, the adhesive, the reinforcing yarn, and the optical fiber) must all function together. Curing and cross-linking of the constituents of the FRP matrix must be completed without thermal damage to the optical fiber buffer layers. The FRP matrix must adhere to the optical fiber core. The adhesive must be cured quickly enough to maintain a high manufacturing speed. The following sections discuss the research, testing, and analysis done to select the components and materials used in the fabrication of the FOMC. It should be understood that, by necessity, these efforts were frequently conducted in parallel with one another. A change in adhesive or yarn or UV-curing system led to testing to ensure compatibility with the other materials, as well as suitability to the basic FOMC design.

ULTRAVIOLET CURING SYSTEM RESEARCH

Previous unsuccessful FOMC fabrication research performed under a NOSC contract with Air Logistics Corporation in 1984 had significant influence on the development and eventual selection of the initial UV light sources used in this test plant. Air Logistics used a single UV lamp system manufactured by Fusion Systems Inc. This lamp system was commonly used in the optical fiber industry for curing the buffer coatings being applied on the glass fiber during fabrication.

However, the Fusion lamp system was found to be unacceptable due to infrared heat output and consequent burning of the FOMC during low-production-rate fabrication. Conversely, if the FOMC dwell time was reduced by increasing the process rate, the adhesive was inadequately cured. In attempts to reduce the infrared (IR) heat incident on the FOMC, several modifications to the Fusion Systems lamp were made.

1. The FOMC was run down the center of a quartz target tube during the curing process. The quartz tube was selected based upon its effective transparency to UV light transmission, but not to infrared. It was theorized that the quartz tube would absorb a sufficient amount of infrared heat to permit complete curing of the FOMC FRP matrix without heat damage occurring to the product. Additionally, the target area was inerted with flowing nitrogen gas to aid in cooling off the FOMC and ensure removal of gaseous by-products released during curing of the adhesive. Although some improvement was noted, the composite was still not properly cured without heat damage occurring to the FOMC.

2. The FOMC was run down the center of a pair of concentric quartz tubes, between which deionized water flowed. While the water was effective in absorbing heat, it also absorbed UV light, and the overall results were about the same as the single quartz tube setup described in 1.

3. The deionized water used in 2 was replaced with a low-percentage copper sulfate water solution. The copper sulfate solution was extremely effective in preventing infrared heat from damaging the cable; unfortunately, the water jacket also prevented sufficient UV light transmission to occur, resulting in the FOMC composite being undercured.

Based upon this experience with the Fusion Systems lamp and the difficulty of modifying this system, other methods of providing a UV light source for the NOSC facility were investigated. The selection of these systems was based upon the ability to provide complete UV light-curing without overheating the FOMC during the manufacturing process. The outer surface of

the FOMC was to be formed and cured by a short wavelength UV light source. A long wavelength source was subsequently used to accomplish the depth cure of the FOMC jacket.

The UV light source initially installed in the research facility consisted of two separate light-producing elements:

- A short wavelength (250–350 nanometers (nm)) source used to cure the outer shell of the composite. This was a pulsed light source manufactured by Xenon Corporation.
- A series of commercially available blacklight fluorescent tubes providing a long wavelength source (>350–400 nm) used to obtain the depth cure of the FRP matrix.

Initial testing indicated that the blacklight system was not providing UV light output sufficient enough to completely penetrate into the interior of the composite layer. Further testing indicated that complete cure of the FOMC jacket could occur by exposure to only the Xenon lamp UV light, provided the fabrication rate was kept at a low enough speed: 5.8 feet per minute. Based on these results, the blacklight system was removed from further consideration.

FOMC test fabrications continued by using the Xenon lamp system as the UV light source. FOMC product output from these test fabrications exhibited good physical and form characteristics immediately after fabrication. However, several days later the FOMC was exhibiting a severe degradation in physical stiffness; the result of exposure to water vapor. Several theories were postulated as to the cause of the poor water resistance:

- Inadequate curing of the adhesive/glass composite
- Poor adhesion between the adhesive and glass yarn
- Breakdown of the adhesive/glass bond when exposed to water
- Degradation of the cured adhesive due to water absorption
- Poor yarn/adhesive wetting
- Any combination of the above

It was theorized that inadequate curing of the adhesive could be the result of either insufficient exposure time of the adhesive to the UV light source and/or poor UV light output by the light source. Prior FOMC fabrication test runs to determine the proper fabrication rate had determined that increased exposure time of the FOMC to the Xenon UV light source eventually resulted in heat damage occurring to the FOMC. It was further hypothesized that the Xenon lamp's pulsed-light output was providing UV light sufficient to partially cure the adhesive, but that this exposure was not sufficient to fully cure and cross-link the resulting polymer so that its physical characteristics were optimized.

Investigations to ascertain the effects of different UV lamp sources on adhesive cure began by fabricating 0.75-inch-wide × 6-inch-long × 0.005-inch-thick adhesive film strips for each of the known adhesives. The adhesive samples were fabricated according to the following procedure:

1. The uncured adhesive sample was spread to a specified thickness of 0.005 inch onto a glass plate. A "Bird" bar was used to spread the sample across the plate to the prescribed thickness.

2. The adhesive film was cured by exposure to UV light. The following light sources were used:

   - Fusion Systems microwave-activated UV light source
   - American Ultraviolet mercury UV light source
   - Xenon pulsed UV light source
   - Fluorescent blacklight UV light source

3. The sample strips were cut to size and removed from the glass backing plate.

4. Each sample was weighed and documented.

To ascertain the effects of water absorption of the cured adhesive versus cure method, the film samples were immersed in a 23°C water bath for periods of 0, 24, 48, and 72 hours. Each sample was then taken from the water bath, dried to remove any standing water on film sample, and immediately weighed. The tests indicated a significant improvement in water resistance resulted when the Fusion Systems and the American Ultraviolet light sources were used to cure the adhesive samples. It was hypothesized that

- The fluorescent blacklight UV light source did not have sufficient UV light intensity to completely crosslink the adhesive. This result concurred with previous test results and validated the initial removal of the blacklights from the research system.

- The Xenon pulsed UV light source did not provide as complete a cure as the steady UV light output by the Fusion and American Ultraviolet light systems.

Based upon the results of these tests, two actions were undertaken: The Xenon lamp was removed from the research fabrication system, and the American Ultraviolet light source was installed in its place. Two modifications to the American Ultraviolet system were required:

1. installation of a back reflector behind the FOMC to permit reflective curing of the backside of the FOMC to occur, and

2. installation of a quartz target tube to permit nitrogen inerting and cooling of the FOMC product to occur during the curing phase of the FOMC fabrication. Figure 3 shows both of these modifications.

Continued test fabrications with the American UV light source resulted in significant improvements in the FOMC physical characteristics. Because the American Ultraviolet source was manufactured only in short units, incompatible with high-speed manufacturing, contact was initiated with several UV lamp system manufacturers to identify lamp sources that would be applicable to the FOMC fabrication system. RPC Industries (now Aetek International) was identified as a probable candidate. Their UV lamp system, model #UVXL100, would accommodate modifications to the lamp housing required to reduce the infrared heat incident on the FOMC during fabrication.

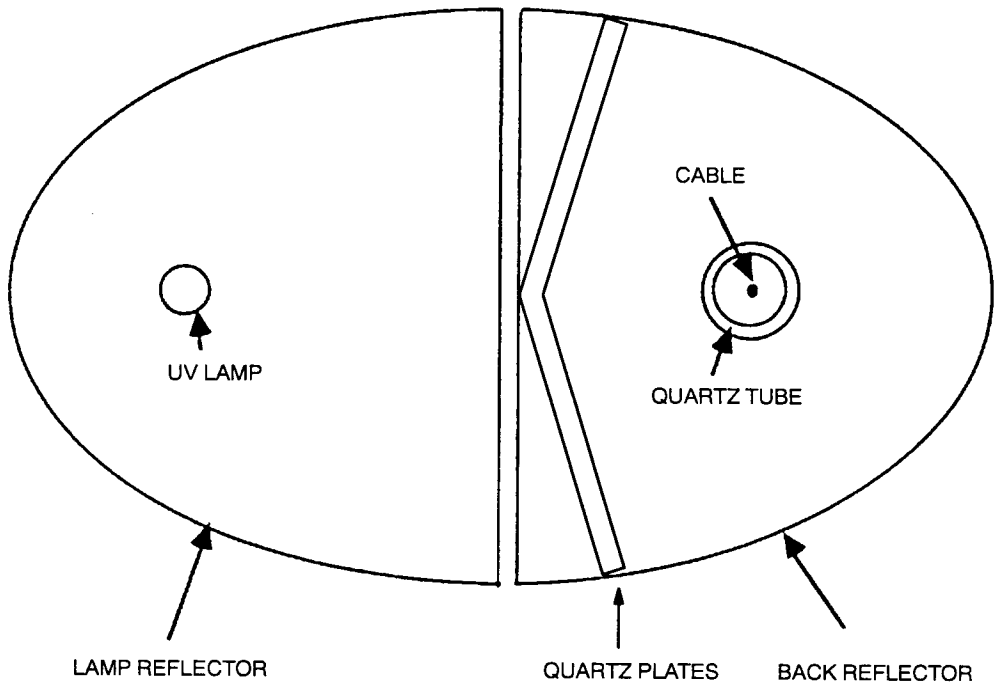

Figure 3. Typical UV lamp/FOMC processor cross section.

A sample lamp system was obtained from RPC Ind. for test and evaluation in the NOSC research test facility. Test fabrications with the RPC lamp system resulted in significant improvements in the FOMC physical characteristics, in addition to a tenfold increase in the FOMC production rate: from the previous rate of 0.03 meters per second (5.8 feet per minute) up to 0.300 meters per second. Suggestions by NOSC concerning modifications to the lamp system that would improve maintenance and reduce infrared heat incident on the FOMC during fabrication were incorporated into the design of the lamp system. This modification inserted air-cooled quartz infrared-absorbing plates between the source and the target. The modified lamp system is presently available from Aetek International as a standard product, model # UVXL250134A (appendix B).

FIBERGLASS YARN RESEARCH

Initial selection of the fiberglass yarn was based upon the smallest commercially available product. This was a yarn composed of 225 separate fiberglass filaments. However, early installation and handling of this product indicated that the individual yarns were too weak and too friable to payout properly under the manufacturing conditions of the FOMC plant. Because of the changes in payout direction and tension, the yarns would fray and break. Breakage of a yarn causes the manufacturing run to be discontinued.

The next yarn thickness examined was a 150-filament yarn. This yarn is readily available from multiple commercial sources. The first yarn tested is manufactured by Pittsburgh Paint and Glass (PPG). This yarn is coated with a starch-based finish material (sizing/binder) that provides good adhesion between the fiberglass and the cured adhesive in the final product. This yarn is independently strong enough to survive the handling stresses of the manufacturing process. This

yarn is called G-150, indicating the number of filaments and the diameter of each individual filament: "G" means that each filament is 9 micrometers (μm) in diameter, the number indicates the number of filaments in the yarn.

Furthermore, FOMC fabrications and follow-on testing indicated that the G-150 size yarn was dimensionally ideal for creating a well-formed FRP jacket around the optical fiber core. FOMC forming and composite characteristics were evaluated and determined empirically by adjusting the forming die diameter and the number of yarns used in the matrix. Table 1 shows FOMC/yarn requirement characteristics determined from these forming tests.

Table 1. Optical fiber core, fiberglass yarn, and forming die diameter relationships.

Core Diameter (in)	Number of Yarns*	Die Diameter (in)
0.010	5	0.020
0.020	11	0.030
0.030	15	0.040
	*G–15 size yarn	

Standard FOMC fabrication requires the application of two 0.005 inch thick FRP layers over the optical fiber core. The necessity of two layers was to achieve the physical strength and stiffness required for reliable, high-speed payout underwater. Standard optical fiber is available with either 0.010-inch or 0.020-inch outside diameter, resulting in "standard" FOMC diameters of either 0.030 inch or 0.040 inch depending on which size optical fiber core is used in the fabrication.

Cables fabricated using the PPG fiberglass yarn had good strength characteristics but poor water resistance. It was suspected that the starch finish used on the PPG fiberglass yarn was hydroscopic and probably not compatible with the epoxy acrylate and polyester adhesives being used in the FOMC fabrication process. Specialized glass finishes could be formulated and applied to the fiberglass yarns, but the quantity requirements of the NOSC FOMC research program did not encourage the glass manufacturers to fabricate these specialized yarns in limited research quantities.

In an effort to improve the compatibility between the PPG fiberglass yarn and the adhesive, the adhesives were reformulated. However, the hydroscopic nature of the glass-starch based finish continued to adversely affect the long-term water resistance characteristics of the FOMC. Further fiberglass investigations eventually uncovered a new G-150-size fiberglass product being marketed by Owens-Corning Glass Works, product #ECG150 1/0 .7Z with a 603-0 finish. This new yarn was manufactured with a combination polyester/epoxy-compatible finish that would be more compatible with the adhesives being researched in the FOMC development project. Use of Owens-Corning yarn with 603-0 finish improved the FOMC water resistance from the previous standard of several hours immersion time to several days.

ADHESIVE RESEARCH

Much of the FOMC development effort involved identifying and selecting the UV-curable adhesives to use in the FOMC fabrication. Initial efforts used standard UV-cured adhesive or coating products manufactured by three companies: De Soto, Masterbond, and Loctite. Early FOMC test development with composite coupons identified the uncured adhesive's viscosity as

the single characteristic requiring modification to enable the FOMC fabrication concept to become feasible. Reduction of the viscosity to within a range of 100 to 200 centipoise (cp) permitted thorough wetting of the fiberglass yarn during the fabrication process, enabling a homogeneous composite FRP jacket to be formed and cured on the base optical fiber core.

Although the adhesives identified in the coupon research were all capable of fabricating well-formed FOMC with good initial physical strength characteristics, the FOMC jacket degraded in stiffness after several days' immersion in a 23°C water bath. Modifications to the UV light sources and the fiberglass finish improved the water resistance of the FOMC; however, the breakdown when immersed continued to occur. It was apparent that the adhesive was being adversely affected by the water immersion.

To isolate the effects of water immersion on the adhesive from the effects of immersion on the composite jacket, separate FOMC samples were fabricated using Loctite 18072 and De Soto 3287-5-7 adhesives. Concurrent with these fabrications, film samples for each adhesive were manufactured with dimensions of 0.005 × 0.75 × 6.0 inches. The FOMC and film samples were immersed in water for similar periods of time. The samples were then removed and tested according to the following procedures:

1. The FOMC was statically tested by bending the cable sample over a mandrel at a specified diameter and maintaining that position for a minimum of 15 seconds. The bending was initiated at a diameter of 1.25 inch. The test was repeated at reduced diameters until failure of the FOMC jacket occurred. In a dry condition, failure of the jacket started at a diameter of 0.625 inch with a fracture of several glass filaments. The FOMC was considered to have failed the water immersion test if the jacket fracture began at a diameter greater than 1.125 inch.

2. The film samples were tested for water absorption by measuring the weight change. Additionally, the adhesive's tensile strength characteristics were determined by tensile loading the adhesive film samples in a standard Instron™ tensile machine. The data obtained consisted of the adhesive's ultimate tensile strength, strain at failure, and Young's modulus versus time immersed.

The FOMC static bend test results determined that the De Soto-based FOMC failed after immersion for 24 hours. The Loctite-based FOMC survived longer, failing after 72 hours of immersion.

The film sample tests determined consistent water absorption results of 3/4% to 1-1/2%, ultimate tensile strength results in the range of 2500 psi to 4000 psi, and a strain to failure of 4% when dry and 2% after immersion. These values remained fairly consistent regardless of the time immersed. In comparison, Young's modulus tended to degrade rather sharply when immersed in water. The film sample tests determined initial dry state modulus values of approximately 115 Kpsi and 278 Kpsi for the De Soto and Loctite adhesives, respectively. After immersion for 24 hours, the De Soto adhesive's modulus had decreased to 90 Kpsi. The Loctite adhesive's modulus fell to 96 Kpsi after 72 hours immersion.

The correlation between the FOMC failure and the adhesive modulus degradation suggested a minimum adhesive modulus value of approximately 100 Kpsi after water immersion. During these fabrication and testing processes, Loctite indicated that they were not interested in reformulating their adhesive, but Borden Chemical indicated that they were interested in the FOMC

development project. This new information regarding Young's modulus was relayed to the participating adhesive formulators.

Based upon this new knowledge of defining the adhesive's cured and uncured characteristics, the adhesive manufacturers revised their formulations to meet these requirements. To evaluate these newly formulated adhesives (and other new adhesives) for application into the FOMC development, a series of preliminary adhesive-characterization tests were developed (see appendix C). As a result of these tests the following adhesive formulations were selected for use in the FOMC fabrication facility:

- Masterbond UV17D-1A
- De Soto 3287-5-9
- Borden 251-138-4

Fabrication tests indicated were problems with the composite jacket associated with the adhesion between the first and second jacketing layers when the De Soto and Borden adhesives were used in the fabrication process. The poor adhesion between the layers was causing the FOMC to suddenly delaminate when statically bent to a diameter of 0.875 to 1 inch. The Masterbond adhesive fabricated a well-formed, stiff, strong FOMC that remained intact down to a diameter of 0.5 inch to 0.625 inch, at which point a few glass filaments under tension would fracture. The undamaged portion of the FOMC would remain intact down to a diameter of 0.5625 inch, at which point the remaining glass filaments in the FOMC jacket would gradually fail. This bending failure mode was interpreted as a gradual failure initiating at 0.625 inch with final failure occurring at 0.5625 inch. This gradual mode of failure was considered more desirable than the sudden mode of failure noted in the De Soto and Borden adhesive-based FOMCs.

In addition to the Masterbond-based FOMC's ability to remain intact down to a smaller diameter, the failure of this FOMC was more consistent and tended to fail at the same diameter with similar failure characteristics. In comparison, the Borden- and De Soto-based FOMCs' mode of failure resulted in widely varying failure diameters, at times failing at a diameter as great as 1.25 inches. Although, in general 80 to 90% of the failures occurred in the 0.875-inch to 1-inch-diameter range.

To attempt to resolve this poor interlayer adhesion characteristic, De Soto formulated two adhesives for fabrication of the first layer of the FOMC. These adhesives were formulated to produce a cured polymer with a tacky surface. However, to produce the tacky surface, there was a reduction in the cured adhesives' Young's modulus and tensile strength. The concept was to achieve good interlayer adhesion with the tacky first layer and provide the required stiffness and strength characteristics with the second layer, which was to be fabricated with the De Soto 3287-5-9 adhesive.

The tacky adhesives were formulated to provide two degrees of surface tack, which for lack of better definition were considered "somewhat" tacky and "extremely" tacky. In both cases, the interlayer adhesion was not significantly improved. In addition, testing showed that, as the tack was increased the strength characteristics of the cured polymer were decreased. Consequently, neither of the adhesives resulted in acceptable FOMC.

Based upon these test results and the lack of consistent strength with the De Soto 3287-5-9 and Borden 251-138-4 based FOMCs, the FOMC development was restricted to utilization of the Masterbond UV17D-1A as the primary adhesive.

Future testing revealed that the interlayer adhesion problem could be eliminated by a simple modification of the fabrication system. However, since these test fabrications were performed in the Research Test Plant where only a single composite layer could be applied at a time, this modification could not be tested.

ADHESIVE/FIBERGLASS COMPATIBILITY RESEARCH

Adhesive/fiberglass compatibility research began by fabricating "coupons" using the PPG yarn in combination with several different adhesive types. The coupons were fabricated by turning a 4-inch × 4-inch × 0.25-inch aluminum "paddle" onto which a 1.5 inch wide, one yarn thick layer of fiberglass was hand-wound. The adhesive was then hand-painted onto the yarn layer. The process was repeated until a 0.125-inch-thick layer of uncured composite material was generated. The composite was cured by exposure of the material to a UV light source. The completed coupon was removed from the paddle and trimmed. Testing of the composite consisted of subjecting the coupon to a bending load until stress failure of the composite or component therein occurred.

Initial results indicated that the adhesives were not impregnating the yarn sufficiently to create a homogeneous composite matrix. This impregnation process is commonly referred to as wetting. Yarn-wetting is normally improved by reducing the adhesive viscosity. This reduction can be achieved through either reformulation of the adhesive or by physically heating the adhesive during contact with the yarn.

For the initial adhesives, heating was determined to be unsatisfactory when damage to the adhesive resulted from the increased temperatures required to reduce the adhesive's viscosity to an acceptable range. When the adhesives are overheated, the volatile compounds (usually the catalysts and photoinitiators) evaporate, causing an increase in viscosity and degrading the curing rate of the adhesive.

Propitiously, several adhesive manufacturers were willing and able to reformulate their adhesives to reduce the viscosity. Subsequent coupon testing with these new adhesive formulations determined a viscosity range from 100 to 250 cp as suitable for adequate wetting of the yarn. It should be noted that elevating the adhesive temperature is an acceptable method of reducing the adhesive viscosity, provided the increased temperature does not adversely affect any of the adhesive's properties. This technique is used in the FOMC Fabrication Pilot Plant at NOSC and the FOMC Production Facilities at Alcatel and Andrew.

Several adhesives exhibited no adverse effects when maintained at a temperature of 150°F. Since this temperature was sufficient to reduce the viscosity of the adhesives to the 100 to 250-cp range, this temperature was accepted as the maximum temperature at which to maintain the adhesives during fabrication. Microscope inspection of FOMC sample cross sections indicated that the reduced viscosity of the reformulated adhesives was resulting in proper wetting of the fiberglass yarns with no apparent voids or "dry" yarns in the matrix.

Research with the coupons ended due to the difficulty in fabricating consistent samples. However, based upon this initial work the following adhesives were selected for further testing efforts:

- Masterbond UV15-SPRS
- De Soto 3287-5-7
- Loctite 18072
- Masterbond UV15-CY

OPTICAL FIBER SELECTION

Selection of the optical fiber was restricted to standard off-the-shelf commercial products. The necessity of this restriction was based upon the following two constraints:

- The output product costs had to be kept low to make the FOMC attractive for expendable applications.
- The fabrication system was to be easily adaptable to permit FOMC to be fabricated when any standard single mode or multimode optical fiber was used as the core.

To meet these requirements, the fabrication system was designed to accommodate two different standard product optical fiber cores, 250-μm diameter and 500-μm diameter. The only fabrication system modifications required to fabricate FOMC from either of these two cores were the number of yarns required for each layer, and the forming die diameter required for each layer (see table 1). No modifications to the commercial optical fibers were considered, including silicone RTV buffers. The complete specification for the optical fiber used in the FOMC development effort is given in appendix D.

Early fabrication tests indicated that the bonding between the first FRP layer and the optical fiber buffer was poor, resulting in reduced bending, stiffness, and torque resistance characteristics of the FOMC. It was speculated that silicone oil used in the buffer formulation was preventing adhesion between the fiber buffer and the first layer. (The silicone oil additive was used by the fiber manufacturer to ease stripping of the buffer from the glass core.) Several techniques were attempted to remove the silicone oil from the buffer, including:

- passing the optical fiber through an acetone wipe just prior to encapsulation.
- passing the optical fiber through a hot trichlorethylene bath followed by an acetone wipe just prior to encapsulation.
- precoating the optical fiber with a material designed to promote adhesion between the optical fiber and the first layer.

None of the techniques were effective in improving the FRP-fiber adhesion. When optical fibers free of silicone oil became available, tests showed that FOMC manufactured with such optical fibers also exhibited poor FRP-fiber adhesion characteristics.

Inspection of sample FOMC cross sections indicated that the poor FRP-fiber adhesion was not necessarily due to chemical effects, but could be related to a physical phenomenon occurring during the fabrication process. It was hypothesized that infrared heat generated by the UV lamp was evaporating moisture carried within or on the surface of the optical fiber buffer material. Sudden evaporation of this moisture was breaking down contact between the core and the FRP layer.

To remove this moisture from the buffer, the optical fiber was dried in an oven at 100°F for a period of 24 hours per 1 kilometer fiber length prior to cabling. Additionally, during the fabrication process, the optical fiber was maintained at approximately 100°F by an infrared heat lamp and stored in a nitrogen inerted environment to maintain the dry condition of the optical fiber. After this pretreatment process, the results in FOMC integrity and strength were greatly improved. Cross sections indicated excellent contact between the core and the first FRP layer. Based upon these results, drying pretreatment of the optical fiber became standard operating procedure.

Although the fabrication system was designed to permit cabling of any optical fiber, experience indicated that some optical fibers were more sensitive to microbending and could not be jacketed without incurring unacceptable attenuation losses. Each optical fiber that was considered for use in the FOMC was test cabled to a length of 1 kilometer to ascertain the effects of cabling on the optical attenuation. Cabling of the optical fiber was considered "successful" if the light attenuation in both the 1300- and 1550-nm wavelengths did not increase by more than 0.1 db/km. As expected, optical fibers that were designed to be resistant to microbending were found to be less adversely affected by the cabling process. These optical fibers consisted of 250-μm diameter, dispersion-shifted single mode and 500-μm diameter multimode and conventional single mode optical fibers. Conventional 250-μm single mode optical fiber tended to be affected at the 1550-nm wavelength, while the 1300-nm wavelength light transmission showed little adverse effect. Standard 250-μm multimode optical fiber could not be cabled without incurring significant attenuation losses.

Prototype FOMC fabrications showed that some Corning fibers had greater resistance to manufacturing stresses than others. Corning technical personnel postulated that the mode field diameter (MFD) of the optical fibers would be the dominant parameter affecting microbending sensitivity and that cutoff wavelength (CW) may also play a role. Prior to this time, the MFD and CW were not characteristics of interest to NOSC and no investigation had been conducted.

Following these discussions with Corning, they agreed to provide short lengths of test fibers of varying MFD and CW values for cabling in the FOMC pilot production facility. These tests demonstrated that the MFD of the optical fiber is a critical characteristic, while no significant correlation was evident with respect to the CW. The MFD and the CW are coupled characteristics because of the manufacturing technology used to produce optical fiber; for this reason, an acceptable range for the CW was specified with the MFD.

In addition to dimensional characteristics and their effect on the ability of the optical fiber to be cabled in the FOMC, the manufacturer's proprietary coating formulations for the optical fibers had an effect on the fiber attenuation after cabling. It was initially expected that similar optical fibers could be cabled regardless of the manufacturer. However, optical fibers manufactured by Corning Glass Works and Sumitomo were successfully cabled, while optical fibers manufactured by AT&T and Alcatel were not successfully cabled.

Investigations into the manufacturing practices of these companies revealed that although the physical dimensions of the optical fibers were similar, the coating formulations used on the fiber core varied with each manufacturer. The different formulations would result in different physical characteristics of the optical fiber buffer. It was hypothesized that some buffer coatings provided more microbend resistance to the optical fiber, which resulted in better cabling for some optical fibers.

Based upon these results, FOMC fabrication uses Corning Glass Works optical fiber as the core. Each manufacturer is continually investigating buffer materials and optical fiber types; it is apparent that if an acceptable optical fiber buffer formulation is changed by the manufacturer, this revised optical fiber may result in unacceptably high attenuation when cabled. Similarly, should other manufacturers change their formulations, their optical fibers could be used.

For example, during the timeframe in which the Mantech project took place, Corning CPC-3 buffer was certified. Much later, at the time this report was written, improved optical properties could be achieved using buffers, such as CPC-6, which did not exist in 1990. The C2B FOMC specification has provision to certify and incorporate such ongoing developments in a controlled fashion, improving the product over time.

FOMC FORMING AND FABRICATION CONCEPTS

Several manufacturing plant design parameters were empirically analyzed during research FOMC fabrication tests. These parameters were varied and test fabrications were run to ascertain the effects of the different variables on the forming of the FOMC, i.e., the effect on roundness, surface roughness, straightness, and core concentricity. Parameters were also varied to determine their effect on the difficulty of successful manufacturing, i.e., yarn handling, yarn breakage, optical fiber handling and fabrication system maintenance and repair. For reference, figure 2 shows the layout of the research and test plant. The following fabrication parameters were investigated.

Yarn Tension

It was anticipated that the ability to adjust and control individual yarn tensions would have a significant effect on the forming of the cable. To investigate this effect, adjustable yarn tensioners were placed in the fabrication system immediately after the yarn bobbins.

Performance of several test fabrications with the yarns at various tension settings indicated that yarn tension did affect the forming characteristics of the cable, especially core concentricity, yarn wetting, roundness, and surface roughness. High yarn tension is required while the yarn passes through the wetting tray in order to spread the yarn out and squeeze trapped air out of the yarn. High yarn tension in the wetting tray also keeps the yarns separated so that they do not rub against one another and fray or tangle. High tension is also desirable as the yarn enters the forming die to hold the yarns in position, ensuring good core concentricity and reduced drifting of yarns within the FRP matrix.

The drawback to high yarn tension is the fragility of the yarns during handling. As each yarn is a bundle of individual fiberglass filaments, rough handling will break filaments, leading to clogging of eyelets and dies and build-up of broken pieces on hardware.

Continued testing determined that the arrangement of the fabrication system hardware, plus control of adhesive, vicosity through adjustment of the adhesive temperature, maintained proper tension in the yarn throughout the system. The tensioners were adjusted so as not to increase the tension at all. The yarns are under low tension until entering the wetting tray. Because of the viscosity of the adhesive, the path over and under the rods in the wetting tray and the bending around eyelets, the tension in the yarns is significantly increased. This results in good forming of the FOMC without overworking the yarns.

Circular Comb Plate Eyelet Base Circle Diameter and Position of Circular Comb Plate

If the fiberglass yarns are held steady as they enter the forming die, with the optical fiber in the center, the forming characteristics of the FOMC are quite good. However, if the entrance angle of the yarns entering the die is too great, the handling stress on the yarns is enough to cause filament breakage, clogging the forming die and breaking the FOMC. Testing to optimize the distance from the horizontal comb plate to the circular comb plate, the distance from the circular comb plate to the forming die and the diameter of the reference circle for the circular comb plate eyelets was conducted in an empirical manner. Test fabrication runs were made with a range of distances and diameters. These tests indicated a relatively large range of values where high-quality FOMC could be manufactured.

A few manufacturing and maintenance criteria were used to settle on the final distances: the area into which the entire fabrication line had to fit, the ease of running and cleaning the fabrication system, and the ease of assembling the entire system. The final values selected were 7.5 inches between the horizontal and circular comb plates, 7.5 inches between the circular comb plate and the forming die and a reference circle diameter of 2 inches for the circular comb plate eyelets. Figures 4 and 5 show the relative positions of these components.

Forming Die Selection

Because the FOMC is uncured and malleable when it passes through the forming die, the first dies used were manufactured from tool steel. After fabrication at NOSC, the dies were heat-treated and hardened to increase their longevity. In spite of the nature of the materials and the treating of the die, after repeated use (over 100 km of FOMC fabrication) these dies did exhibit erosion effects caused by the passage of the fiberglass yarns through the die. As a result of this short lifetime, commercial tungsten-carbide dies were investigated. The dies used in subsequent FOMC production are wire-forming dies manufactured by Sancliff, Inc. The dies have the following characteristics:

- Tungsten carbide
- 16° approach angle
- Bearing length of 50% of the specified hole size
- Hole tolerance of ± 0.0001 inch

These dies have exhibited no erosion, grooving, or wearing on the forming surface after fabrication of over 1200 km of FOMC.

Fabrication Hardware, Guide/Weaving Rod, and Guide Eyelet Material Selection

The manufacturers of the UV-curable adhesives stated that bronze or any other copper-based material coming in contact with adhesive could cause chemical reactions with the adhesives and would change their characteristics. Aluminum (6061) hardware was used in early components of the fabrication system without any apparent adverse effects on the adhesive. However, prolonged use of this hardware resulted in slight corrosion of the aluminum. This was caused either by the adhesive or the chemicals used to clean the aluminum wetting trays (lacquer thinner, acetone and UV Process Supply Clean-Up Solvent #314).

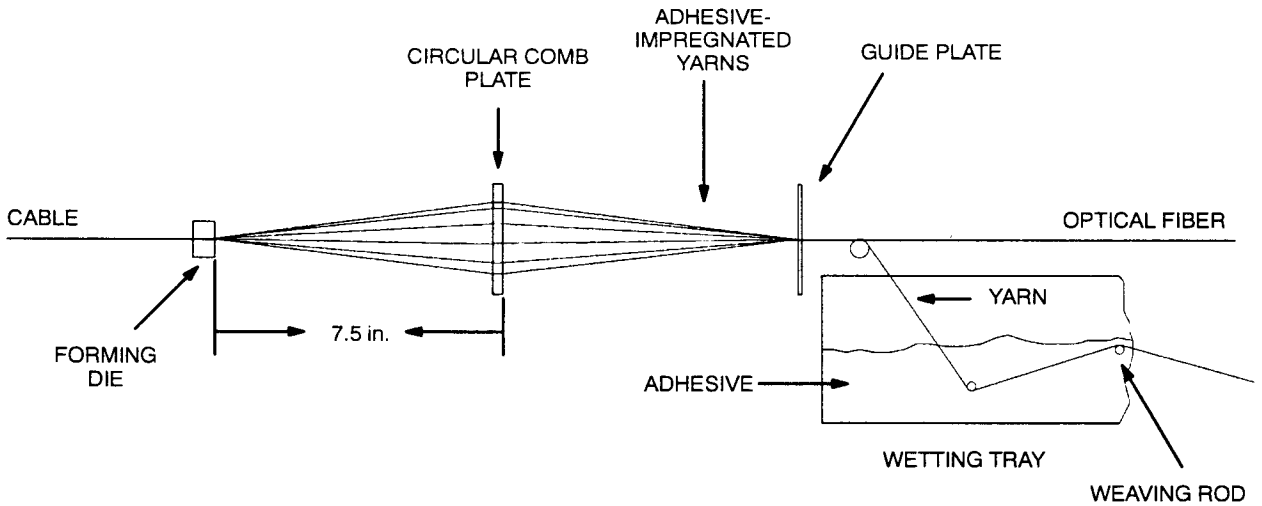

Figure 4. Comb plate and forming die positions.

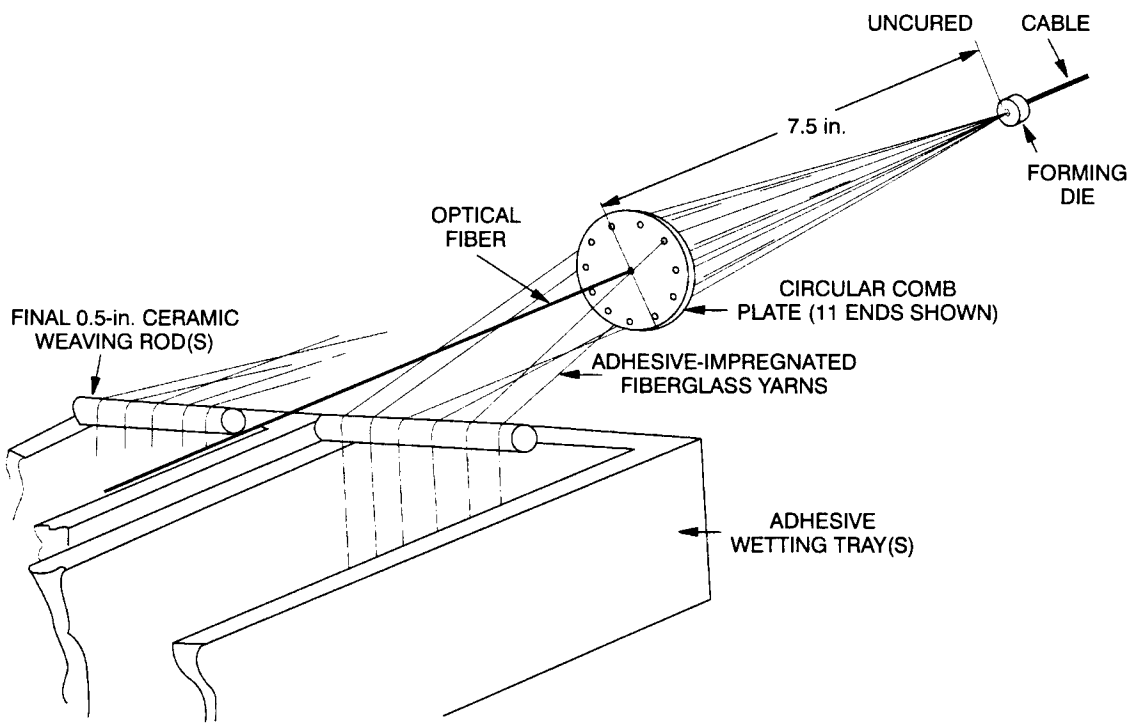

Figure 5. Circular comb plate and forming die positions.

The aluminum was replaced with stainless steel. All fabrication system hardware (exclusive of the guide/weaving rods and guide eyelets, which were ceramic) that comes in contact with the UV-curable adhesive was fabricated from 300 series stainless steel. Initial guide rod material was 316 stainless steel as well. Prolonged use of the stainless steel rods showed that the fiberglass yarns were cutting the rods. This eventually caused damage to the yarns as the rods developed uneven and abrasive edges.

The steel guide rods were then replaced with alumina-ceramic rods manufactured by Coors Ceramics. The ceramic rods were polished to a #4 finish to reduce yarn abrasion. The eyelets used throughout the FOMC program are alumina-ceramic; the same eyelets used in the textile industry for handling and guiding fiberglass yarns.

Forming Die, Wetting Tray, and Adhesive Temperature Control

Cable fabrication tests indicated that the surface characteristics of the FOMC (particularly smoothness) are improved by heating the forming die. A temperature of 150¡F is used for all of the qualified adhesives. A higher temperature could damage the adhesive, as discussed earlier.

Heating the wetting trays, and hence the adhesive, reduces the viscosity of the adhesive to improve yarn-wetting and adjust yarn tensions. There is no apparent improvement to the FOMC gained by heating the adhesive other than viscosity control. Viscosity versus temperature measurements determined the following fabrication adhesive temperatures:

Table 2. FOMC fabrication adhesive temperatures.

Adhesive	Temperature (°F)
Masterbond UV17D–1A	100
De Soto 3287–5–9	150
Borden 251–138–4	120

PART II. FOMC FABRICATION PILOT PLANT

DESIGN FEATURES OF THE FOMC PILOT PRODUCTION FACILITY

Based upon the information learned from the cable-fabrication concept tests and materials investigations performed in the Research Test Plant, a two-stage fiber-optic microcable fabrication pilot plant was designed and assembled. The pilot plant is essentially two research test plants placed end-to-end, permitting the first and second layers of FRP matrix to be applied to the optical fiber core in consecutive steps.

Figure 6 shows the layout of the FOMC pilot production facility. Throughout this description, "front" will refer to the take-up and storage reel end of the production line. Note that figure 6 is not to scale and is intended only to show the general relationship between components.

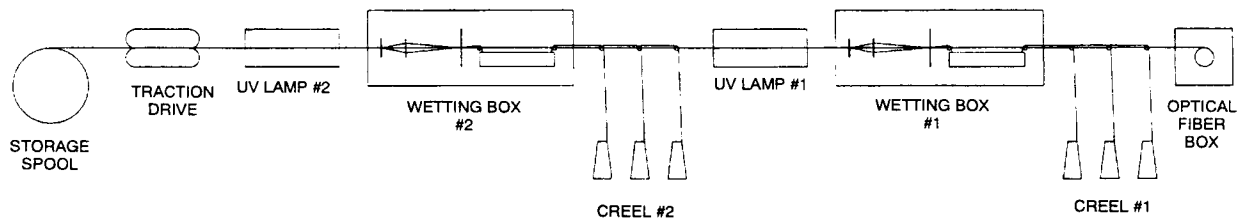

Figure 6. FOMC pilot production plant layout.

All of the structural framework for the components of the facility is constructed of Unistrut™. Unistrut™ was used because assembly is fast and easy and so that the facility could be modified and added to without difficulty. Unistrut™ construction also allows easy access to the components. This was a critical design requirement because of the need to frequently and thoroughly clean all components of the manufacturing system.

The dominant design feature of the FOMC pilot production facility is the open architecture. Experience working with the manufacturing line showed that for cleaning and troubleshooting, as much of the system hardware should be easily accessible as is practicable, even during a manufacturing run. To reduce material loss and downtime, the operators of the facility must be able to inspect the system during a production run and, when necessary, they must be able to work with the yarns, adhesive, optical fiber, and their associated hardware.

Beginning at the back end of the production line, the first section of the facility contains the optical fiber payout system. The optical fiber reel is placed within this box and the box is flooded with nitrogen gas to prevent water vapor from condensing on the optical fiber, which has been oven-dried. The optical fiber feeds through a dancer-arm accumulator assembly on the back of the first wetting box. This accumulator provides tension feedback to the motor that drives the axle the optical fiber reel is mounted on, allowing the tension of the optical fiber to be controlled throughout the manufacturing process. The optical fiber payout box also has an infrared lamp mounted on the bottom to warm the optical fiber during payout and further reduce water vapor condensation. One whole side of the optical fiber payout box is removable to allow easy access and mounting of the optical fiber reel. The payout motor and belt drive assembly are mounted on the outside of the box so that they can be checked and repaired without opening the box and

exposing the optical fiber to water vapor. The drying operation was subsequently changed to an inline dryer for convenience.

The second major component is the first yarn creel. The fiberglass yarn creel is designed to allow easy access to all the yarn bobbins and tensioners. There is a removable plexiglass cover over the creel to prevent dust from settling on the yarn bobbins. Each yarn feeds through a tensioning device located directly above the bobbin that acts to change the direction of payout from vertical to horizontal. The open design of the creel and the transparent plexiglass cover facilitate inspection of the bobbins and tensioners during the cable manufacturing process. The first yarn creel contains eight yarn bobbins, of which five or eight are used in each manufacturing run, depending on the exact product being manufactured. The creel was subsequently modified for horizontal payout and the tensioners eliminated to reduce yarn tension even more.

In front of the first yarn creel is the first wetting box. The wetting boxes are designed to accommodate the requirements of (1) easy access, (2) protecting the adhesive from ultraviolet radiation and dust and (3) protecting the operators from high concentrations of noxious fumes. The wetting boxes have metal sheeting all around them, with the side sheets hinged so that they can be opened. The boxes are ventilated from above by a blower on the roof of the building. When the operators are not working in the wetting boxes or inspecting the components inside, the sides are closed to block out light and dust. A slight vacuum prevents fumes from escaping the wetting box.

There are eight ceramic eyelets installed on each side of the back panel of the wetting box, in a horizontal row. The yarns from the first yarn creel enter through these eyelets. There is a stainless steel tray on each side of the wetting box as well. The yarns are guided into these trays, over and under a set of ceramic rods in the pans and out through another row of ceramic eyelets. The wetting trays are filled with adhesive prior to manufacturing and the ceramic rods ensure that the yarns are thoroughly impregnated with adhesive. The wetting trays have drain pipes at one end for adhesive recovery and draining of solvents during cleaning. The wetting tray on the left side (facing forward) has a thermocouple that feeds temperature data to a controller that maintains the wetting pans at a constant temperature by means of a heating mat under each tray.

The optical fiber passes through a hole in the center of the wetting box and runs between the wetting trays. The optical fiber passes through the center of the circular comb plate in front of the wetting trays and enters the forming die at the front end of the wetting box without making contact with the adhesive.

From the wetting trays, still inside the wetting box, the yarns pass through a circular comb plate and into a forming die. The circular comb plate arranges the yarns symmetrically around the optical fiber so that the fiver is centered within the cable matrix when the cable is cured. Adhesive is wiped off the yarns at the circular comb plate and in the forming die. The extra adhesive is caught in pans under the comb plate and forming die and is pumped back into the wetting trays by a peristaltic pump. The die plate that secures the forming die has a thermocouple that feeds temperature data to a controller that maintains the forming die at a constant temperature.

The first ultraviolet lamp stand is in front of the first wetting box. This is simply a framework to support the ultraviolet lamp at the correct height. The uncured cable matrix of fiberglass yarn, optical fiber and adhesive enters the lamp and is cured into a composite material with the optical fiber in the center. The lamp is not secured to the framework so that it can be precisely aligned at the start of each manufacturing run.

From the first ultraviolet lamp, the cable passes through the second fiberglass yarn creel so that it does not interfere with the payout of the yarns. The second yarn creel contains 11 yarn bobbins, all of which are used in the manufacture of FOMC. Other than the different number of yarns, the second yarn creel is identical to the first yarn creel.

The second wetting box is identical to the first wetting box, except that the partially completed cable passes through a snubber consisting of a rubber baby-bottle nipple.

After the second group of 11 ends of yarn have been added to the FOMC, the cable passes through 2 more ultraviolet lamps to be fully cured. These lamps are, again, resting on frameworks so that they can be precisely aligned at the start of each manufacturing run.

As is clear from the description above, the FOMC is assembled in two discrete steps, and both steps are quite similar. To the greatest extent possible, identical components were used in both yarn creels and both wetting boxes. This facilitates inspection and cleaning, and reduces the spare parts stock necessary to minimize downtime due to repairs.

The cable is pulled through the manufacturing system by a belt-drive traction winch. This unit is off-the-shelf equipment from Reel-O-Matic ™. The traction belts are available by requisition through Federal Stock, and replacement of worn belts is a relatively fast and easy task, requiring approximately 15 minutes. The speed of the traction drive is set by the system operator and is feedback controlled.

From the traction drive, the cable is wound onto a large storage reel by a Reel-O-Matic level-wind spooling machine. This machine accumulates the cable so that it can be off-wound from the storage reel at high speed without damage to the cable. The speed of the take-up machine is also set by the operators, but must be checked as the cable builds up on the storage reel. As the diameter of the reel increases due to the accumulation of cable, the speed of the take-up machine must be reduced to avoid dragging the cable through the traction winch. The storage reels are constructed of high-density particle board flanges, PVC pipe cores, and stainless steel hardware to hold the reels together. The sturdy reel construction is required to withstand the subsequent pretwisting during the cable-winding operations.

PREPARATION AND STORAGE OF THE FOMC MATERIALS

Ultraviolet Curable Adhesive

The ultraviolet adhesive is sensitive to even low-intensity ultraviolet (UV) light and is somewhat sensitive to high temperature. The adhesive is also moderately flammable. The shipping cans are heavy-duty, opaque 5-gallon cans that protect the adhesive from UV light, but not from high temperature. These cans are stored in a shaded place approved for storage of flammable material. Because the cans will rust, they are also stored in a dry place.

Once the adhesive is removed from the can, care must he taken to avoid exposure to UV light. The cans are not opened in the presence of sunlight through windows or in the presence of unshielded light sources. The fluorescent lights in the handling area all have UV blocking filters on the tubes. Switches on unshielded lights in the area have been secured. Care is taken during the manufacturing process as well, since the wetting trays are sometimes open. The wetting box doors on the side facing the exhaust fans are kept closed as much as possible because sunlight comes in through the fan louvres during the afternoon.

The adhesive can be left in the wetting trays for short periods of time, e.g., overnight or over 2 nights. The adhesive is not permitted to sit in the wetting trays more than 2 nights. The reasons are not well understood, but problems frequently occur during a run if the adhesive sits still in the trays for more than 2 days. If the system is being run and fresh adhesive is added as necessary, there are no problems setting up on a Monday and running through the week. But the adhesive cannot he allowed to sit more than 2 days. However, if the adhesive does sit for more than 2 days, it can be drained, filtered, and reused after the system is completely cleaned.

No preparation is necessary for the UV adhesive. At the appropriate time during the setup procedure, the adhesive is transferred from storage cans into the wetting trays. The adhesive is allowed to warm up to the temperature of the wetting trays to decrease the viscosity sufficiently to thoroughly wet the yarns.

Optical Fiber

The optical fiber reels are stored so that the reels are on edge rather than resting on one of the flanges. This is to reduce the possibility of layers sagging and overlapping during storage. The optical fiber is stored in a dry place protected from high temperature after incoming inspection is completed.

The optical fiber is prepared for use by drying in an oven at 100°F for at least 2 weeks. This time period is the minimum for a 20-km fiber; shorter lengths of fiber can he dried for shorter periods of time. This is done to evaporate any water that may be trapped in the layers of fiber so that water vapor is not introduced to the adhesive or the finished EOMC.

At the appropriate time during the setup procedure, the optical fiber reel is placed in the drying chamber at the head of the production line. The chamber is immediately closed and nitrogen is allowed to flood the compartment. The continuous flow of nitrogen and the closed compartment are designed to prevent water vapor from condensing on the dried optical fiber.

Fiberglass Yarns

The fiberglass yarn is stored on its shipping bobbins, in an upright position, in such a manner that the bobbins do not come in contact with one another. Unless they are disturbed during the shipping process, this is how the yarns are delivered. The yarns are stored in a dry place.

The yarn bobbins are prepared for use by visual inspection and peeling off the outer layers. Each bobbin must be carefully inspected to determine if there are noticeable dents or cuts in the yarn on the bobbin. Small dents are generally acceptable; if they are not, it will be revealed during the peeling procedure. If there are large dents or cuts in the yarn layers, the bobbin cannot he used for manufacturing production lengths of FOMC and is rejected.

After a bobbin passes the visual inspection, the outer layers are peeled off. This is accomplished by attaching the end of the yarn to a disposable reel on the system take-up winch. The motor is run at high speed. If there are no breaks in the yarn, this process is continued until at least 1 kilometer of yarn has been removed from the bobbin, exposing virgin surface. At this time, the bobbin can be installed in one of the yarn creels and used to manufacture FOMC. If the yarn breaks, the bobbin is inspected to determine the cause. If the yarn was snagged on the bobbin or machinery, the yarn can be reattached to the disposable reel, and the peeling process can be continued. If the yarn breaks a second time, it is assumed that there is something wrong with the bobbin and the bobbin is not used, even if there is no visible problem.

When bobbins sit in exposed positions (e.g., in the yarn creels) for more than 2 weeks without being used, they are gently blown off with compressed air before they are used. This is to remove external dust and dirt that might otherwise clog the manufacturing system.

FOMC MANUFACTURING SYSTEM SETUP PROCEDURE

There are two sections of this discussion. The initial setup procedure can he done at any time and the system can be left in that status almost indefinitely until the decision is made to manufacture FOMC. The preoperation setup is only undertaken when the manufacturing team is ready to begin operations.

Initial Setup Procedure

Before beginning the setup procedure, the manufacturing system is checked thoroughly to make sure that the wetting trays, comb plates, wetting tray inserts, guide eyelet, and ceramic rods are all dry and clean. There should not be any old adhesive or any solvent evident on any of the manufacturing system hardware. There should not be any evidence of yarn coating finish buildup on the guide eyelets or ceramic rods. Finally, there should not be any loose filaments or fragments of yarn on any of the guide eyelets or ceramic rods.

Given that the system is clean, the setup procedure begins with checking the yarn bobbins in the yarn creels. To maintain a safe margin for error, a bobbin used in the manufacture of a 20-km cable must have at least 1200 grams of glass, independent of the bobbin itself. A bobbin used to manufacture a 10-km cable must have at least 800 grams of glass. The operation supervisor will have sufficient experience to determine which bobbins are close enough to the minimum weight to require weighing; only bobbins that are questionable are removed from the creel to be weighed. Each bobbin is located directly under a tensioning device. The only function of the tensioners, however, is to change the direction of the yarn travel from vertical peeling to horizontal payout. Each yarn is strung through a guide eyelet attached to the base of the tensioner, then through the two guide eyelets of the tensioner itself. The yarns are then strung through the guide eyelets in the back end of the wetting boxes. The height of the tensioner is immaterial to the order in which the yarns are strung; however, the yarns must not cross each other or come in contact with each other. The exact pattern for stringing the yarns through the eyelets in both wetting boxes is shown in figure 7. The yarns are strung over the 0.5-inch ceramic rod immediately in front of the first horizontal comb plate.

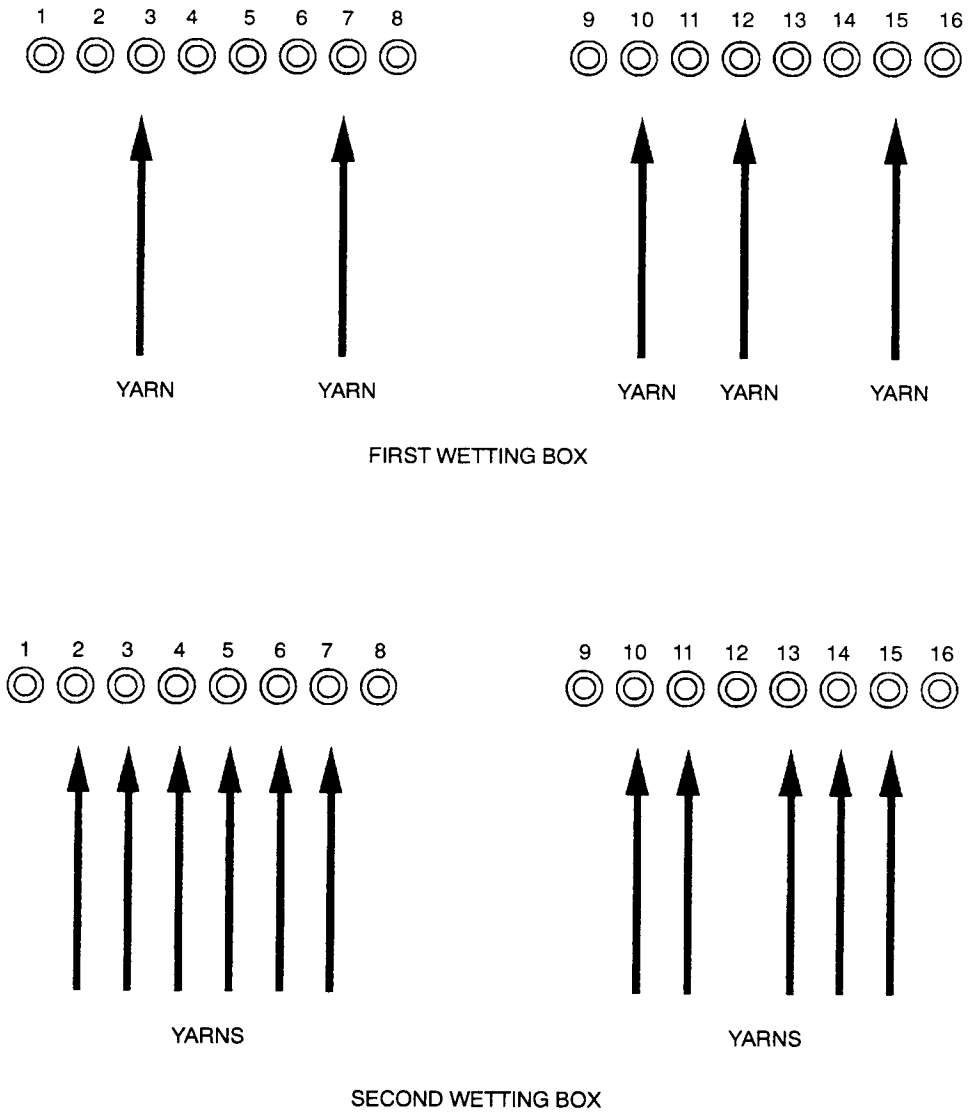

Figure 7. Horizontal comb plate stringing patterns.

The next step is slightly different for each wetting box. In the first wetting box, the yarns are strung over the second 0.5-inch ceramic rod and through the second horizontal comb plate, each yarn passing through the eyelet corresponding to the eyelet it passed through in the first comb plate. In the second wetting box, because there are more yarns, there are angled separation plates with six small eyelets that sit in the wetting trays. The purpose of these plates is to keep the yarns separated during the manufacturing run. On the five-yarn side, the same eyelet that was skipped in the comb plate is skipped in the separation plate. After the yarns are strung through the separation plate, they are strung over the second 0.5-inch ceramic rod and through the second horizontal comb plate, through the eyelet corresponding to the eyelet each was strung through in the first comb plate.

Once the yarns are strung through the second horizontal comb plate, they are strung through the circular comb plates that align the yarns around the core of the cable. The exact arrangement of yarns around the circular plate is shown in figure 8. This arrangement is based on minimizing

the angle between the yarns and the circular comb plate and not crossing any of the yarns. The three-dimensional nature of the system allows the stringing patterns shown to be used and not have contact between any two barns, although the drawing disguises this fact.

After all the yarns are passed through the circular comb plate, they are passed together through the forming die. The forming die for the first stage is 0.0170 inch in diameter; the forming die for the second stage is 0.0270 inch in diameter. The forming die is placed into the die holding and warming fixture, and a snap ring is inserted to hold the die in place. The bundle of yarns passing through the first die is then pulled through a hole in the end of the wetting box. To pull the yarn through the lamp assembly, a piece of cable is kept coiled at each lamp station. The cable is inserted through the lamp tube by pushing it into the exit eyelet from the lamp and out through the entrance hole. The bundle of yarns is taped onto the piece of cable, and the cable is then drawn back through the lamp, pulling the yarns with it. The piece of cable, with the yarns still taped on, is inserted through the second yarn creel so that it does not interfere with any of the yarns as they peel off and go through the tensioners. The cable is pushed through a baby–bottle nipple in the back end of the second wetting box and through a guide eyelet in the second horizontal comb plate. Then the yarn bundle is pulled through and the cable is detached.

The yarn bundle is inserted through a guide eyelet in the center of the circular comb plate in the second wetting box. This bundle of 5 yarns from the first creel is pulled through the second die with 11 yarns from the second creel, resulting in all 16 yarns being drawn through the second die. Another piece of cable at lamp #3 is used just like the cable at lamp #1, to pull the yarn bundle though lamps #2 and #3. The piece of cable at lamp #3 is long enough to pass through both lamps, making it easier to string the yarn bundle through them. The yarn bundle is pulled all the way through the traction drive system and then left to hang there.

Two different lengths of 0.25-inch diameter ceramic rods are used in the system: 5.5-inch and 5.75-inch. After the yarn bundle has been pulled all the way through the system, the 5.75-inch ceramic rods are inserted into the wetting trays. These rods go <u>underneath</u> the yarns and are only placed in the forward three slots of each wetting tray. After the 5.75-inch rods are in place, the 5.5-inch rods are slipped into the holes in the wetting tray inserts. Only the forward four sets of holes on each wetting tray insert are used. Once the 5.5-inch rods are in place, the wetting tray inserts are lowered into the wetting trays. In the second wetting box, the angled yarn separation plates are then placed on top of the wetting tray insert, in contact with the rear handle. The entire yarn bundle is then pulled through the traction drive system to remove the slack from the yarns.

The next step in the setup procedure is to arrange the adhesive drip pans and adhesive return system. This process is identical for both wetting boxes. A long, narrow stainless steel pan is placed under the second horizontal comb plate to catch adhesive running off this plate. A deep, rectangular pan is placed under the circular comb plate, and a second such pan is placed under the forming die holder. A 0.375-inch nut and bolt assembly is placed under the back edge of the pan so that adhesive pools along the front. A piece of teflon-coated vinyl is cut as shown figure 9 and then attached to the catch pan under the circular comb plate. The narrow part of the vinyl is inserted under the comb plate, and the larger part is attached to the pan by its own adhesive backing. This piece of vinyl will deflect adhesive dripping off the front of the comb plate into the catch pan. The catch pan under the die holder will fit far enough under that the adhesive running out of the die will fall into the pan without needing to be guided.

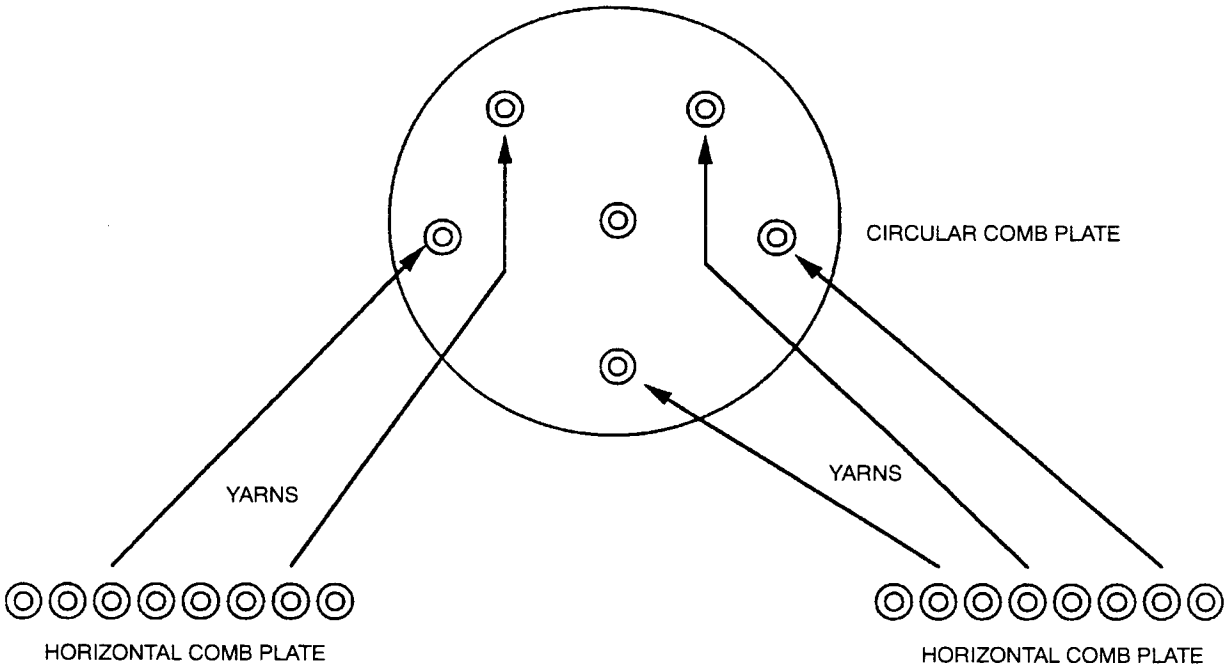

STRINGING PATHS FOR FIRST WETTING BOX

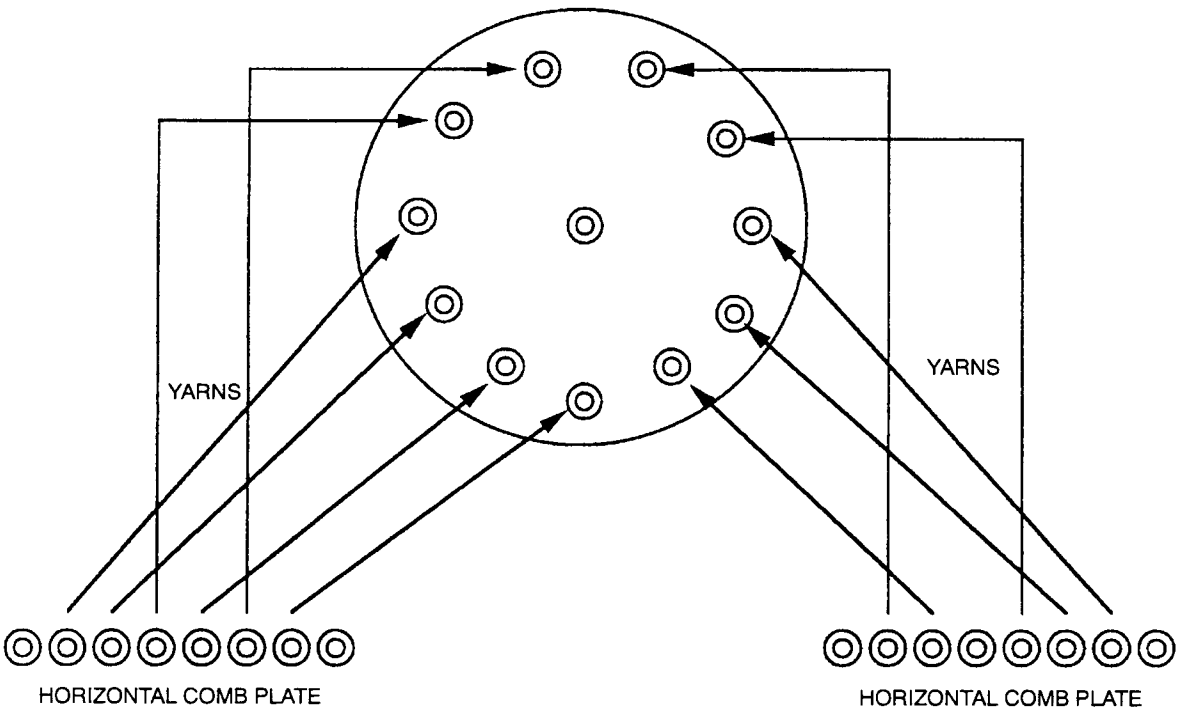

STRINGING PATHS FOR THE SECOND WETTING BOX

Figure 8. Circular comb plate stringing patterns.

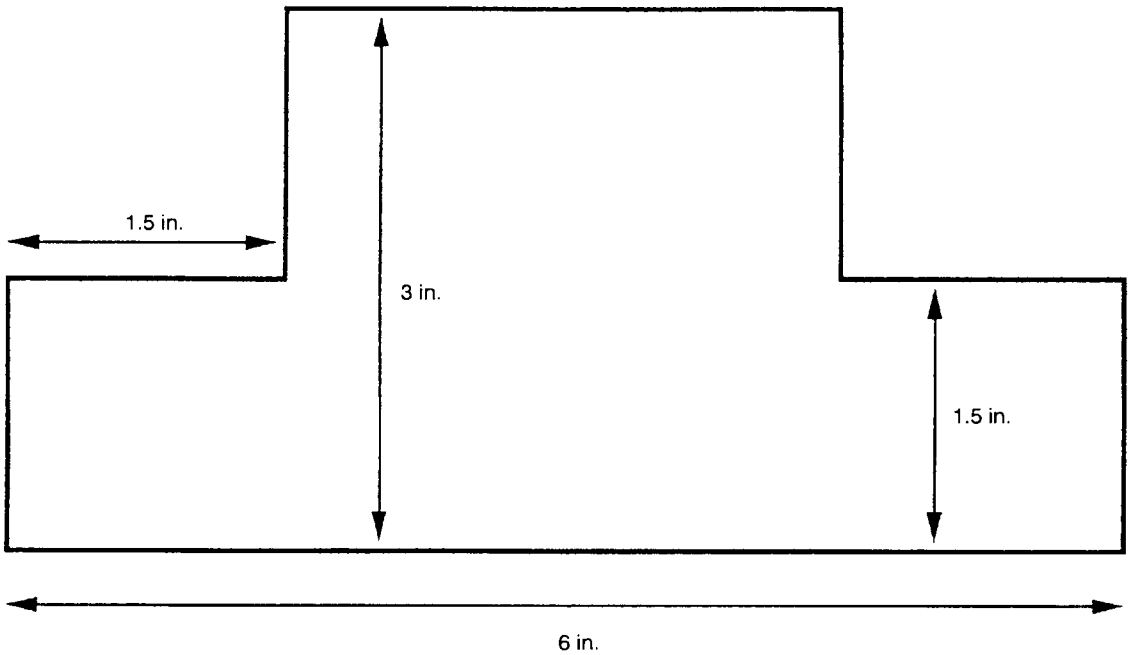

Figure 9. Teflon adhesive guide.

Number 16 size Tygon™ tubing is used to return adhesive to the wetting trays after it runs off the comb plate or die. A piece of tube 34 inches long is used to carry adhesive from the pan under the die, through the pump head, and into the pan under the comb plate. The section in the pan under the die is trimmed so that it is not long enough to draw itself up against the wall of the pan and close off. A second piece of tube 41 inches long is used to carry adhesive from the pan under the comb plate, through the pump head, and over between the two wetting trays. The end of this tube is trimmed like the tube in the pan under the die. A plastic "Y" joint is installed in the end of the tube between the two wetting trays, and two more pieces of tube, 12 inches long, are attached to the fork of the "Y" joint. Each of these tubes is inserted into a plastic pinch valve. These tubes are then attached to the wetting trays with binder clips, one tube in each tray. It is usually necessary to hold the tubes properly in the catch pans using adhesive tape. The tape is placed high enough in the pan that the UV adhesive used in the cable manufacture does not come in contact with the tape used to secure the tubes.

The payout system in the fiber payout box is checked to make certain that all of the set screws are tight and the hardware for mounting the fiber reel is available. The set screws on the belt drive on the side of the box are checked, the set screw on the inside reel stop is checked, and the outside reel stop is placed in the box, with the hex key used to tighten the set screws. Two narrow pieces of duct tape will also be needed to secure the reel to the outside reel stop and prevent jerks in the rotation.

A take-up reel is mounted on the take-up system drive shaft and the PVC pipe core is cleaned with acetone. If necessary, the inside edges of the flanges are filled with silicone RTV so that FOMC does not slip into this crack.

The final step in the initial setup procedure is to cover the sides of the lamps and cut adhesive tape to cover the ends of the wetting boxes and lamps. The lamp housings have a sheet metal

cover over a portion of both ends of each lamp. These covers do not provide adequate shielding against the intense UV and visible energy generated inside the lamps. Pieces of duct tape are cut and placed over the crack between the lamp housing top and the lamp housing itself to reduce this problem. Small pieces of duct tape are also cut to iris over the exit holes in the wetting boxes and the entrance holes for lamps #1 and #2. Four pieces of tape for each hole are used so that the holes can be made as small as practicable around the cable. These pieces of tape are used to block excess UV light from entering the wetting boxes and shining on the dies. This would cause the adhesive to cure in the die and would result in yarn breakage and material waste. The exact disposition of these pieces of tape will be described in the operation discussion, but the tape is cut and left close to the holes it will cover.

At this time, the initial setup is complete, and the system can be left as is for as long as necessary.

Preoperation Setup Procedure

The following steps are started at least 1.5 hours before the manufacturing run is started. Four compressed air lines are to open; three lines at approximately 16 psi and one line at approximately 50 psi. Ten electrical cords must be plugged in: the heat lamp in the fiber payout box, one for each UV lamp; three extension cords that power the wetting tray and die temperature controllers, pumps, and temperature alarms; a 240-V line to power the traction and take-up drives; an extension cord to power the cooling fans between the traction drive and lamp #3; and an extension cord for the antistatic device on the take-up reel stand. There is a circuit breaker panel in front of the traction drive system: there are three circuit breakers inside, one for each lamp, and these are turned on. The exhaust fans to clear the wetting boxes and the fans to ventilate the building are also turned on.

After everything is plugged in, the wetting tray heaters are turned on and the controllers are set to 100°F. Adhesive is poured into the wetting trays. The yarns will stay separated better if the wetting trays are filled with approximately 1.5 gallons of adhesive each. This is enough to provide good yarn wetting but not enough to overflow when the adhesive is pulled toward the front of the wetting trays. The adhesive and the wetting trays require at least an hour, and preferably longer, to warm up to operating temperature. Once the adhesive is poured into the wetting trays, the yarns are not pulled at any point along the manufacturing line. If wet adhesive is pulled into the dies it could set up there, and, if wet adhesive is pulled into the lamps and makes contact with the lamp tube, it will bond there when the lamp is opened, breaking the cable and possibly the lamp tube as well.

Approximately half an hour before the manufacturing run is to begin, the lamps are turned on and set on "Standby." When the lamps are ready, they will automatically switch from "Standby" mode to "Ready" mode. When the lamps are turned on, the start time is noted in the log book at each lamp station. At this time, the die heaters are turned on and the controllers set to 150°F. The lamps are then monitored while they warm up; if necessary, the exhaust shutters are opened or closed enough that the lamps warm up to the 140° to 155°F range.

About 20 minutes after the lamps are started, the fiber reel for the cable is removed from the drying oven. The serial number is entered in the operations log, and the reel is mounted in the fiber payout box. To mount the reel, it is placed on the axle in the payout box, the outside reel stop is put on the axle and tightened, and the two pieces of tape are placed over the ends of the outside reel stop and onto the reel to keep it from jerking back and forth during payout. The side

of the box is immediately attached to the box, and the nitrogen cylinder used to flood the payout box is opened so that the pressure at the exit regulator is between 75 and 100 pounds. The fiber is unrolled enough to string all the way through the first wetting box. The fiber is strung between the first creel yarn bobbins so that it does not interfere with their payout and through a baby-bottle nipple on the back end of the first wetting box. The fiber passes through a guide eyelet in the middle of the second horizontal comb plate and through a guide eyelet in the circular comb plate. The fiber is then pulled out to the side, about 2 feet of slack are pulled through, and the fiber taped to a Unistrut™ support member to secure it until it is inserted into the cable. The fiber is prepared by stripping the cladding for about an inch and then stripping half the cladding for another inch, making a tapered end about 2 inches long. The fiber is then threaded through the tension-sensing accumulator, and enough additional fiber is payed out by hand to have the accumulator in its relaxed position. Once the fiber is correctly strung through the wetting box, the feedback controller for the payout motor can be turned on. If the fiber is 3 kilometers or less, the controller is set on "Light Reel." If it is longer, it is set on "Heavy Reel." The tension adjustment is set all the way to left, clockwise. The only action from the payout system should be to tighten the accumulator very slightly.

Once the lamps are operating in the proper temperature range and the wetting trays and adhesive are up to temperature, the three nitrogen dewars that purge the quartz target tubes in the lamps are opened all the way. They must all provide at least 140 pounds of pressure; all three have independent flow meters. The traction drive system is set to run at 42 feet per second (fps), and the take-up system is set to approximately the correct speed and then turned off. The final check is to open the shutters in all three lamps and then close them again. Provided that all three shutters open and then close, the manufacturing system is ready to operate.

Fabrication Parameters

Part I, Adhesive Research, discussed some of the different operating requirements of the three qualified adhesives. The setup and operation portions of this document describe the system when the Masterbond UV17D-1A adhesive is used because the great majority of the fabrication done in the pilot plant uses this adhesive. The operation supervisor must ensure that the system is set up and run properly according to the adhesive used.

Although the UV lamps can be switched between 200, 300, and 400 watts per inch, the best compromise between life of the irradiator bulb and FOMC manufacturing speed is 300 watts per inch. The process speed and the optimal setting of the shutters in the first lamp were determined empirically. Cable samples were fabricated at a wide range of speeds with the shutters open and closed, and the samples were subjected to static bend and water immersion tests. The results of these tests determined the maximum process speeds. The results are summarized in table 3.

Table 3. Adhesive type and operating parameters.

Adhesive	Process Speed (fpm)	First Lamp Shutters
Masterbond UV17D-1A	72	Open
De Soto 3287–5–9	82	Closed
Borden 251–138–4	72	Closed

FOMC MANUFACTURING SYSTEM OPERATION

Startup Procedure

Assuming that all the procedures of the setup description have been followed, the manufacturing system is currently ready to operate.

One operator stands in front of the traction drive (following the convention that "front" is in the direction of cable travel) and opens the shutters in lamps #1 and #2. The operator then begins pulling the yarn bundle, slowly. There is considerable friction in the system once wetting tray inserts are installed and the adhesive has been poured, but the yarns must pull freely, without sticking. If they do pull freely, the operator turns on the traction drive and closes it on the yarns. The operator must remain at the traction drive until cured FRP begins to go through the belts. If not, the dry yarns will stick to the belts and be pulled into the traction drive.

Once the yarns and adhesive are being properly cured and the system is running smoothly, the operators must use the adhesive tape cut earlier to close off the wetting box exit holes around the cable. The tape must <u>not</u> come in contact with the cable, but the holes are made as small as is practicable. The tape is used to block UV light from entering the wetting box and curing the adhesive in the die.

After the wetting box holes are covered, the operators must check the exit eyelets of all three lamps. The cable must not come in contact with any of the exit eyelets. Adjustments in lamp horizontal position can be made by physically moving the lamp assembly on its platform. Vertical adjustments can be made using the threaded rods on the corners of the lamp assembly. The entrance holes of the lamps are also checked; the FOMC must travel a straight path down the center of the lamp tube without contacting any eyelets. Once the eyelets and entrance holes are aligned and the cable is pulling without touching anything, the entrance holes of lamps #1 and #2 are covered with the adhesive tape cut earlier. This further reduces the UV light shining into the wetting box and also reduces the eye hazard to the operators. Two pieces of tape can also be used to partially cover the entrance to lamp #3.

Adhesive will be running off the comb plates and out of the die, so the pumps are turned on. The pumps are checked to make sure that they are turning in the correct direction, given the installation of the tubing, and that the tubing has been installed so that the adhesive is pumped from the pan under the die to the pan under the comb plate and then from the pan under the comb plate back into the wetting trays. If the tubing has not been installed properly or consistently, it can be changed at this time without having a detrimental effect on the operation of the system.

Once the adjustments above are made and the system is running consistently and smoothly, the operation supervisor checks the FRP to see how it breaks. The operation supervisor's experience with manufacturing FOMC will indicate whether or not the breaking characteristics are normal. Properly cured FRP "tears" in simple bending, without buckling. If the FRP breaks properly, the optical fiber is inserted. If the FRP is not breaking properly, the operation supervisor must determine why not. The temperature of the adhesive and the dies is checked, as well as the path of the yarns and the temperature of the lamps. If the problem cannot be located and the FRP is still not exhibiting proper characteristics, the run must be stopped to find the problem.

To insert the optical fiber, the operator holds the fiber firmly and releases it from the tape securing it to the Unistrut™ frame. Then the tapered end of the fiber is placed near the entrance

to the die. The movement and friction of the adhesive-coated yarns will tend to pull the fiber into the die and center it. The operator verifies that the fiber is going through the die properly by pulling back and forth slightly before allowing much of the fiber into the die. If the fiber is seated properly, the operator pays out the slack of the fiber and then releases it and allows the fiber payout system to begin its operation. This is automatic once the fiber is pulled into the first lamp and the tension increases.

On rare occasions, the added thickness of the optical fiber in the FRP causes a momentary jam at the second die. For this reason, the second operator stands in front of the traction drive and pulls the FRP at the same rate the traction drive pulls. The object is not to pull any faster, but to pull hard if the material does jam. If the FRP jams, the operator who inserted the fiber must immediately check the yarns in the second wetting box to see if any have broken. If none of the yarns are broken, the run can continue. If more than one yarn broke, the run must be stopped. If only one yarn broke, the operation supervisor must decide whether or not to attempt to restart that yarn. This procedure is detailed under Problem Control.

If the fiber insertion is without incident, the operator increases the tension in the payout accumulator by turning the tension adjustment counterclockwise until the marks on the dial and the controller box match, putting a tension of approximately 75 grams in the optical fiber. The fiber accumulator will be moving back and forth slightly, but should not be jumping around wildly. The heat lamp in the bottom of the fiber payout box is now turned on. If at any time the optical fiber reel stops turning, the heat lamp in the fiber payout box must be turned off as soon as possible. If the heat lamp shines on the fiber in one place for more than about 30 seconds, the heat could damage it.

The operation supervisor cuts a small piece of FOMC and verifies that the optical fiber appears to be present and properly centered. Then a sample approximately 10 meters long is cut for testing. One of the operators then takes the free end of the FOMC and, as it is drawn through the traction drive, walks it around the guide sheaves to the take-up reel. The other operator starts the take-up motor and meets the first operator with a large piece of adhesive tape. The operator with the tape attaches the tape to the end of the cable, and the other operator goes to manually slow down the take-up reel. While one operator slows down the reel, the other operator attaches the tape to the reel. If the attachment is successful and the cable is being collected properly, one operator can increase the speed of the manufacturing system to 72 feet per minute (fpm). This is done by setting the higher speed, opening the shutters in the third lamp, and then entering the higher speed so that the traction drive begins to actually increase speed. (The traction drive will not change when a new speed is set, only when it is entered.) The other operator watches the tension and increases or decreases the speed of the take-up motor, as appropriate.

At this point, the FOMC is running smoothly and consistently, the fiber is paying out smoothly, all the yarns are paying out smoothly, and the system is running at 72 fpm with all three lamps open.

The operation supervisor notes the following information in the operations log: (1) the time when the FOMC was attached to to the take-up reel, (2) the temperature and humidity in the room when the FOMC was taped to the take-up reel, (3) largest and smallest diameter of the FOMC found on the 10-meter sample piece, and (4) the bend diameter at which filaments in the sample first broke. The operation supervisor also fills out a quality assurance (QA) data sheet for the manufacturing run, which includes much of the information above.

OPERATING CHECKS

While the manufacturing system is running, a number of things are checked periodically by the operators. The order is not particularly important; the list is given starting at the fiber payout box and progressing through the system to the take-up system. These checks are made by one of the operators approximately every 5 minutes to minimize the impact of any problems.

First, check that the fiber is paying out normally, that the cable feeds through the accumulator assembly, and that the accumulator is not jumping around. The heat lamp in the fiber box should be on and the nitrogen pressure between 75 and 100 psi. The payout controller should be on, as are the wetting tray and die heaters and the pump.

The yarns in the first creel should be paying out smoothly, with no build-up of loose filaments on the tensioners. If filaments are present, they are carefully removed with tweezers or fingers.

The yarns in the wetting box should be paying out smoothly and should not be in contact in the wetting trays. The 0.5-inch ceramic rod in front of the first horizontal comb plate is checked to see if there are loose filaments or yarn-coating material building up on the rod. If there is build-up, it is carefully cleaned off with an acetone-soaked cotton swab. The operator must make sure that no acetone is introduced into the wetting tray. The circular comb plate is examined to see if filaments are building up in any of the eyelets. If so, they are carefully removed with sharp-point tweezers. The die is also checked for filament build-up and, if there is build-up, it is removed with sharp-point tweezers. The level of adhesive in the two wetting trays is compared. If one tray has noticeably more adhesive, the pinch valves are adjusted to equalize the amount of adhesive in the trays.

After the inside of the first wetting box is inspected, the tape closures on the exit hole from the box and the entrance to the lamp are checked to ensure that the cable is not touching the tape. The temperature of the lamp is checked.

The second yarn creel is checked like the first. The second wetting box is checked like the first, with the addition of inspecting the angled guide plates for filament build-up. The temperature of lamps #2 and #3 is checked.

A bank of small fans between lamp #3 and the traction drive system should be on whenever the system is running, to ensure that the FOMC is cool when it enters the traction winch. The belts of the traction drive are checked so that, if they are wearing excessively in one place, the FOMC can be moved over slightly to a fresh section of the belts. If the FOMC is moved in the traction drive, the alignment through the lamp eyelets must be checked again to ensure that the FOMC is not in contact with any eyelet. The FOMC should not be touching the traction drive controller panel as it passes between the first and second sheaves. All three nitrogen pressure gauges should read 140 psi or more.

Finally, check that the FOMC is being collected onto the take-up reel evenly across the surface. There should be no build-up near the flanges, nor should the center of the reel gather more than the edges. If adjustments are required, either or both of the winding sheave stops can be moved a little. The winding sheave stops must be tightened firmly to keep them from working loose and moving during the run.

The operation supervisor calculates when the fiber reel will have approximately 3 kilometers of fiber left. At this time, the "Heavy Reel" setting on the fiber payout controller should be changed to "Light Reel."

Stop and Shutdown Procedure

Three reasons to stop the manufacturing run are (1) there is a problem too severe to repair during the run and the run must be terminated early, (2) the manufacturing run is for a limited length of FOMC and the length is being timed, and (3) the optical fiber core is completely used and a full length of FOMC has been manufactured.

In all three cases, the correct means of stopping the operation of the system is to shut off the main power switch at the traction drive control panel. This cuts the power to both the traction drive and the take-up system, so that both stop simultaneously. In cases #1 and #2, the operation supervisor shuts off the power at the proper time: when he decides the problem cannot be repaired or when the FOMC is of the correct length. The second operator immediately turns off the heat lamp in the fiber payout box. In case #3, one operator stands at the fiber payout box and the other waits by the traction drive power switch. The operator at the payout box watches until as much of the fiber as can be used is payed out, then signals the other operator, who shuts off the traction drive.

After the traction drive is switched off, the operator allows approximately 5 seconds to elapse, then he closes the shutters in all three lamps. Once this is done, the order of events is not important, and either operator can perform any of the shutdown tasks.

The nitrogen dewars should all be closed off immediately to avoid wasting nitrogen.

The FOMC must be taped down on the reel so that it does not unroll when cut. The piece of FOMC between the traction drive and the take-up reel is used as a sample. It is cut free and rolled up for testing. The quality assurance (QA) label from the fiber reel is placed on the take-up reel as this information and the manufacturing date will be required at the next QA step in the cable-manufacturing process. The FOMC is now ready to be delivered for testing and annealing. The operation supervisor enters the following information in the log book and on the QA data sheet: (1) the temperature and humidity in the room, (2) the diameter of the FOMC, (3) the bend radius, and (4) the stop time for the manufacturing run. The QA data sheet is sent with the FOMC as a traveler.

Once the shutters in the lamps are closed, the "Lamp Off" button on the lamp controllers is activated. The lamp blowers and controllers will stay on, but the lamp bulbs will shut off and start to cool down. After the lamps have cooled to below 100°F, the main power switches on the lamps can be turned off, the lamps can be unplugged, and the lamp circuit breakers can be turned off. The compressed air is no longer needed and can be shut off. The high-pressure line is purged after shut-off so that none of the components are damaged by remaining at high pressure for long periods of time.

The traction drive system is opened, so that the tension in the manufacturing system will pull the FOMC back out of the lamps slightly. This will keep wet adhesive from entering the lamps and making them more difficult to clean. The pumps, wetting tray heaters, and forming die heaters can all be turned off and unplugged. The lamp temperature alarms can be unplugged. The heat lamp in the fiber payout box is unplugged. The fiber payout controller is turned off. If the system will not be cleaned up at this time, the exhaust fans in the building can be turned off and the doors of the wetting boxes are closed and latched to keep dust and UV radiation out. When the operating team is finished for the day, the building lights are turned off at the circuit breaker panel inside the door.

PROBLEM CONTROL DURING OPERATION OF THE FOMC MANUFACTURING PLANT

Several problems can occur during the manufacturing of FOMC. Some problems are encountered often enough to warrant the use of standard procedures to deal with them. By using standard techniques in the event one of these problems occurs, the adverse impact can be minimized and the manufacturing run continued without loss of material.

It is worth reiterating here that uncured FOMC is absolutely unusable. Only very short lengths of FOMC with less than 16 ends of yarn are normally acceptable. FOMC with no optical fiber core is unacceptable. If one of these conditions occurs, good material already manufactured can be salvaged, but any of these three problems is serious enough to discard the affected FOMC.

Lamp Cooling

Three ultraviolet lamps are in the manufacturing system, and all three must be operating properly to manufacture FOMC at 72 fpm. A lamp that cools below approximately 140°F is not radiating sufficient ultraviolet energy to cure the cable. Due to changes in the ambient conditions, lamps will occasionally cool below this threshold temperature. Each of the three lamps has a separate temperature sensor and alarm; the alarms are set to warn of high or low temperature before the temperature is out of the proper operating range. The response of the operating team is based on which of the three lamps cools off.

Lamp #1: First Layer. Tests have been conducted that show the first layer does not have to be completely cured to attain the full physical and optical properties. If the first lamp cools, a solid cover is placed over the intake fan to halt the cooling ventilation and allow the temperature to come back up. The shutters inside the lamp housing are left open so that residual UV radiation will partially cure the surface of the cable. When the temperature of the lamp is back above 140°F, the cover is removed from the intake fan and operation continues normally.

In the event that the temperature drop cannot be controlled and the lamp cools to below 100°F, the FOMC is completely uncured at the first layer and will not be cured properly by the second layer lamps. In this case the FOMC is unacceptable and must be discarded.

Lamps #2 or #3: Second Layer. If only one of the second layer lamps cools below 140°F, the following procedure is used, regardless of which lamp cools. First, the manufacturing speed is reduced to 42 fpm and the shutters inside the affected lamp are closed. Second, a solid cover is placed over the intake fan to stop the cooling ventilation and allow the temperature to increase. When the lamp returns to the proper temperature, the cover is removed, the shutters are opened and the speed of the manufacturing system is increased to 72 fpm. The manufacturing system can he operated at 42 fpm as long as necessary, even if the affected lamp has to be shut down and significant repairs made.

Lamps #2 and #3: Second Layer. If both of the second layer lamps cool below 140°F, the FOMC is uncured and is unacceptable. The FOMC must be marked immediately. At the operation supervisor's discretion, the manufacturing run can be continued. In this case, once the lamps are functioning properly again, the FOMC is marked again and, from that point on, the FOMC can be used. However, it is imperative to remove the uncured portions from the salvaged sections before they can be used.

If the manufacturing run is continued, the shutters in lamp #1 are closed, and the system speed is reduced to 10 fpm. This reduces material waste and maintains sufficient speed that the

tension in the manufacturing system keeps the components properly aligned. Then, the intake fans on lamps #2 and #3 are covered and the shutters in the lamps are closed. When the lamps are back at proper temperature again, the covers are removed, the shutters on all three lamps are opened, and the manufacturing system speed is increased. At this time, the FOMC can be marked again and the subsequent manufacturing will be acceptable.

All Three Lamps Cool. In this case, the FOMC is unacceptable. At the operation supervisor's discretion, the run can be continued, but the material must be marked so that the uncured section can be removed later on. If the run is continued, the system speed is reduced to 10 fpm, the shutters on all three lamps are closed, and the intake fans are covered. When the temperature is back to the proper range in all the lamps, the shutters can be opened, the speed increased, and the covers removed.

Yarn Breakage

The fiberglass yarns used as strength members in the matrix can break at any of several points between the yarn bobbin and the lamp that bonds the yarn into the matrix. There are 5 yarn bobbins in the first yarn creel and 11 bobbins in the second creel. First-layer yarns pass through six guiding and aligning ceramic eyelets and a forming die before entering the lamp. Second-layer yarns pass through seven eyelets and a forming die before entering the lamp.

A procedure for replacing a broken yarn has been tested several times (see Yarn Reinsertion Procedure in this section). However, it is complicated, can be time-consuming, and does not always work. The technique has never been successfully applied during an actual manufacturing run; tests were conducted under normal operating conditions, but only for the specific purpose of developing and testing this method.

If more than one yarn breaks, the manufacturing run must be terminated. If only one yarn breaks, the operation supervisor may decide to attempt replacement. If the replacement method is not successfully executed quickly and in one try, the run must be terminated, and the FOMC manufactured with only 15 yarns must be discarded.

Loss of Air Pressure

The manufacturing system uses compressed air at two different pressures: (1) three lines of air at approximately 16 psi are used to ventilate and cool the target tubes and infrared shielding quartz plates, and (2) one line of air at approximately 50 psi is used to open and close the shutters in the lamp. There is one 50-psi line and there are three 16-psi lines, but all are fed from one compressed air line coming from a single compressor unit. Due to nature of the air reservoir, it is possible to lose the high-pressure line and not the low-pressure line.

Loss of High-Pressure Air. The high-pressure air line is used to open and close the internal shutters in each lamp. If the air stops, the shutters will remain in whichever position they were in at the time: if open, they will remain open, if closed they will remain closed. Because of this, the high-pressure air is not actually needed once the production run is at full speed, as long as the shutters do not have to be closed for any reason. At the completion of the manufacturing run, the lamps can be turned off at the lamp controllers, and the shutters can be manually closed after the lamps have cooled.

Loss of Low-Pressure Air. The low-pressure air is used to ventilate and cool the target tubes. The low-pressure air is critical to maintain the FOMC at a cool enough temperature so as

not to burn the FOMC during processing. Thus, if the low-pressure air is lost and cannot be restarted quickly, the manufacturing run must be stopped.

Failure of Traction Drive or Take-up Reel

The FOMC is pulled through the manufacturing system by a traction drive system with a digital controller. It is collected onto reels driven by a take-up system with an analog controller. If either of these elements fail for any reason, the manufacturing run must he terminated. The take-up system cannot pull the FOMC at the proper speed reliably should the traction drive fail, and it is not feasible to turn the take-up reels by hand should the take-up drive fail. If the manufacturing run were nearly complete or if repairs could be made quickly, it is possible that hand-turning the take-up reel would work, but only for a very limited amount of time.

Other Events

A great many other situations could arise that would affect the characteristics of the FOMC. Because of the many variables involved, the operation supervisor must have considerable experience with the manufacturing system and a good understanding of the intricacies of the process. In essence, the complexity of the manufacturing system makes it impossible to quantify the decision-making process beyond a few guidelines; the operation supervisor will have to make decisions based on experience as well as the factors mentioned above.

Yarn Reinsertion Procedure

The following procedure has been developed and tested to replace a broken yarn during a manufacturing run. The steps are followed in order. Both personnel on the operating team must be familiar enough with the method that each can perform certain tasks independently. It does not matter which person is #1 or #2, as long as both are familiar with their tasks.

1. Person #1 marks the FOMC as soon as the break is discovered. This mark is an <u>approximate</u> location for the beginning of the section of cable with only 15 yarns. Person #2 takes a large, flathead screwdriver and inserts it between the last 0.25-inch ceramic rod in the wetting tray and the bottom of the tray itself, wedging the screwdriver in so that the 0.25-inch rod is not allowed to turn. If left free, this rod will turn and wind the yarn onto itself.

2. Person #1 slows the manufacturing speed down to 42 fpm and then closes the shutters in lamp #3. Person #2 cleans any yarn filaments out of the eyelets and die.

3. Person #2 strings the new yarn through the tensioner in the creel and through the first guide eyelet. After the yarn is ready, person #1 reduces the speed of the system to l fpm and closes the shutters in lamps #1 and #2.

4. Person #1 lifts the wetting tray insert out of the wetting tray. If the last 0.25-inch ceramic rod has yarn wrapped around it, it is replaced with a clean rod; cleaning the existing rod would take too long. Person #2 pulls the yarn under the tray insert and through the second guide eyelet.

5. Person #1 replaces the wetting tray insert and replaces the screwdriver to keep the ceramic rod from turning. Person #1 then opens the shutters in lamps #1 and #2 for 5 seconds.

6. Person #1 moves to the opposite side of the wetting tray, fills a small paper cup from the other wetting tray, and fills two disposable eyedroppers from the cup. Person #2 strings the yarn through the circular comb plate and pulls about 3 feet of slack yarn through the wetting tray. This yarn must be pulled straight through so that it does not hockle.

7. Person #1 opens lamps #1 and #2 and increases the speed to 42 fpm.

8. Person #2 places the yarn near the die opening. While person #2 is inserting the yarn, person #1 uses the eyedroppers to flood the die opening with adhesive.

9. The yarns going through the die will tend to grab the new yarn and pull it as well. Person #2 must feel the yarn and make sure it keeps going when the other yarns grab it and must also watch the die to make sure all the yarns are going through, not being pulled into a knot. When the yarn is pulling properly, person #2 feeds the slack yarn into the die, watching to make sure it is running through smoothly. Once the yarn is taken into the die, person #1 can stop flooding the die with adhesive. Person #1 then watches the entrance to the lamp and makes sure the yarn is not peeling off inside the lamp tube.

10. Once all the slack yarn has been fed into the FOMC, the spliced area goes through lamp #2 and is completely bonded into the rest of the cable. Person #1 can trim any protruding fibers from the cable between the traction drive and the take-up reel. The operation supervisor examines the splice to determine whether or not it is adequate and the run can be continued.

11. If the splice is adequate, the FOMC is marked again, lamp #3 is be opened and the manufacturing speed increased to 72 fpm.

FOMC MANUFACTURING SYSTEM CLEAN-UP PROCEDURE

Cleaning the FOMC manufacturing system requires the use of several potentially harmful chemicals: acetone, lacquer thinner, methylene chloride, ethyl alcohol, and a proprietary formulation of ultraviolet light-cured adhesive solvent sold by UV Process Supply, Inc. (UVPS). Because these toxic and flammable chemicals must be used, several safety procedures must be followed. All operators of the FOMC manufacturing system must have read the Material Safety Data Sheets on all materials used in FOMC manufacture and clean-up. When the adhesive is in the wetting trays and someone is in the building, the wetting box exhaust fan should be turned on. During the cleanup procedure, the building exhaust fans should be turned on. Gloves are worn whenever contact is anticipated with the adhesive or any of the cleaning chemicals. Skin-tight surgical-type gloves are adequate for contact with the adhesive, but not the harsher cleaning chemicals. A properly fitting respirator, disposable or with replaceable cartridges, should be worn when using the UVPS solvent, lacquer thinner, or methylene chloride. Great care should be taken at all times to avoid introducing the adhesive or any of the chemicals into the eyes or mouth. Operators should remember that the adhesive will cure when exposed to sunlight, including when it is on the operator's skin. There are several kinds of gloves and liners available in the area, along with disposable respirators, hand cleaners, barrier creams, and skin lotion. All of these products are used liberally to avoid any potentially harmful contact with the chemicals used to manufacture FOMC and clean up the manufacturing system.

Two clean-up procedures are used in the manufacture of FOMC. When more than one run is made during a week, a partial clean-up is done before restringing. When the system is being shut

down for a few days, a complete clean-up is done. The complete clean-up process will be described first, and then the partial clean-up will be described.

Complete System Clean-up

During the manufacturing run, large sheets of kraft paper are cut and placed on the floor next to both wetting boxes, on both sides of each box. This paper protects the floor from adhesive and chemical spills and stains, and keeps the hardware from getting dusty and dirty while sitting on the floor.

Before the actual cleaning processes can begin, the remaining UV-curable adhesive must be drained from the wetting trays. Because of the low viscosity of the adhesive at elevated temperature, the wetting tray heaters are turned on and allowed to sit for at least an hour before the adhesive draining is begun.

Once the adhesive is warm, a paint filter is placed in a funnel and the funnel is placed in one of the adhesive storage cans. The can is placed under one of the wetting tray drain pipes and the plug is removed from the pipe. Two pieces of Unistrut™ in each wetting box are used to prop up the end of the plywood panel the wetting trays rest on. This will cause the adhesive to run down to the end where the drain is, making the draining process faster and more thorough. While one wetting tray is draining into a storage can, the others can be drained directly into the catch pans used under the dies and circular comb plates. In this way. the adhesive will be ready for filtering, and the clean-up procedure for the wetting trays can continue while the adhesive is being filtered.

While the adhesive is draining, the yarns are cut between the tensioners and the first horizontal comb plate at both yarn creels. The first layer is cut after the lamp #1 and before the second wetting box. The FOMC is pulled back through lamps #2 and #3 to the end of the second wetting box. The ends of the yarn are then pulled through the second wetting box, and this section of cured and uncured FOMC is discarded. The first layer of FOMC is pulled back through lamp #1 and the ends of the yarns are pulled through the first wetting box. This piece of cured and uncured FOMC is also discarded. The wetting tray inserts are raised and allowed to drain into the wetting trays by placing 0.5-inch stainless steel rods under two of the notches on the lower side of the inserts and allowing the inserts to rest on the rods, out of the adhesive.

The hardware in the wetting boxes can also be removed while the adhesive is draining and filtering. The circular comb plate and the two nuts and bolts that secure it are cleaned. The forming die is removed from the holder for washing. The ceramic rods in the wetting tray and the ceramic rods in the wetting tray insert are removed. The clips used to secure the adhesive return tubes are removed. The nut and bolt sets under the catch pans are removed for cleaning. The plastic hardware on the adhesive return tubes is removed and cleaned: each wetting box has a "Y" joint, two inside tube couplers, one outside tube coupler, and two pinch valves. The wing nuts that secure the pump heads on the pump motors usually get adhesive on them and are also cleaned. The angled separation plates in the second wetting box are cleaned. After the wetting tray inserts have finished dripping, they can be placed on the floor for cleaning later, and the stainless-steel rods used to support them are added to the other hardware to be cleaned. The tubing used in the adhesive return system is discarded after being removed from the pump heads and after the plastic hardware is removed from the tubes. The duct tape used to iris the lamp openings and wetting-box exits is discarded.

At no time during the adhesive draining do the operators have any of the solvents out. The hardware removal and emptying of the wetting tray will take long enough for all the adhesive to be drained and filtered. The adhesive is not to be exposed to even the vapors of the cleaning materials. When each wetting tray stops draining, a plastic spatula is used to scrape the sides and bottom of the wetting tray and push adhesive that is adhering there down the drain pipe. As much adhesive as is practicable is recovered. When the adhesive in the catch pans is poured into the filter funnel, the sides of the catch pans are also scraped with the plastic spatula. Only when all of the adhesive has been stored can the solvents be brought out.

The metal hardware from the wetting boxes, except the drain pipe plugs and the forming dies, is put in a soak pan of lacquer thinner. These parts are generally allowed to soak at least overnight. After soaking, they are cleaned with acetone and dried. The ceramic rods can also be put in this can, but care must be taken because excessive contact with stainless-steel parts will scar and chip the rods. After soaking, the rods are also cleaned with acetone and dried.

The hardware with ceramic eyelets glued in, the circular comb plates, and the angled separation plates must be cleaned by hand with acetone because the lacquer thinner will attack the epoxy holding the eyelets in place. A hose is attached to the high-pressure compressed air line to blow material out of the eyelets and forming dies. Each eyelet is thoroughly cleaned, blown through with compressed air, and inspected against a lighted background to make sure there are no foreign materials or damage inside the eyelet.. The forming dies are cleaned and inspected the same way.

The plastic hardware pieces from the adhesive return system are hand-cleaned with acetone and have compressed air blown through them. After cleaning, there should not be any adhesive anywhere on or in any of these parts.

The pump heads are wiped off with a clean paper towel. If they have any adhesive on them, they can be cleaned with alcohol, but not with acetone or lacquer thinner.

Cleaning the wetting trays, wetting tray inserts, and hardware fixed in the wetting boxes is a two-stage process. A respirator is required for the first stage and strongly recommended for the second. First, the drain pipe plugs are replaced in the drain pipes. Then, UVPS solvent is poured into the wetting trays to a depth of approximately 1 inch at the deep end. This solvent is used to thoroughly wipe down the inside and outside of the wetting trays, with special attention to the slots that hold the ceramic rods. This solvent pool is used to wipe off the second 0.5-inch ceramic rod and the second horizontal comb plate. A cotton swab handle dipped in this solvent is run through all of the eyelets in the second horizontal comb plate. The solvent is then used to wipe off the Unistrut™ fixtures that secure the circular comb plate and the forming die holder. The aluminum sheet on the bottom of the wetting box is also wiped down. Any other surface in the wetting box that has adhesive on it is wiped with the UVPS solvent.

After the inside of the wetting box is wiped down, the wetting tray insert is thoroughly cleaned with the UVPS solvent. A cotton swab is run through all of holes in the wetting tray insert. Finally, the drain pipe from each wetting tray is also cleaned with this solvent.

After these cleaning steps are completed, the UVPS solvent is drained from the wetting trays into the catch pans, and the plastic spatula is used again to scrape the sides and bottom of the wetting tray and recover as much of the UVPS solvent as is practicable. This solvent is then returned to the storage can, and the wetting tray heaters are turned off. Large amounts of excess UVPS solvent left on the wetting box hardware are dried off with a clean towel.

At this point, the drain pipe plugs can be soaked in the lacquer thinner can with the other wetting box hardware. The catch pans are placed in a 55-gallon drum of lacquer thinner that is approximately one-third full. This is deep enough to cover the catch pans and filtering funnel while they soak. The pans and funnel usually soak overnight and then are cleaned with acetone and dried.

The second stage of cleaning the wetting trays, inserts, and fixed wetting box hardware is to use acetone to thoroughly clean all the surfaces. The acetone plays a dual role: it removes the UVPS solvent and also any of the adhesive that was missed in the first stage. Because of the fast evaporation of acetone, the hardware is wiped off; acetone is not poured into the wetting trays. Special attention is given to the corner of the wetting trays and all of the surfaces that the yarns contact. Both 0.5-inch ceramic rods are wiped to remove adhesive, yarn filaments, and yarn finish coating that has rubbed off onto the ceramic rods. A cotton swab handle is used to clean the inside of the second horizontal comb plate eyelets with acetone. The cotton swab is also used to clean all the holes in the wetting tray inserts. The drain pipes are cleaned with acetone and the hardware of the wetting box itself is also wiped down once a month, including the doors. Acetone is used liberally throughout the cleaning process; it is the final cleaning and all parts and hardware must be completely free of adhesive and solvents when the cleaning process is complete.

When the wetting boxes and wetting tray inserts are clean, the kraft paper on the floor is rolled up and discarded. Any puddles of adhesive and solvent are wiped up with paper towels. If necessary, acetone is used to remove adhesive and solvents from the floor. The adhesive will not evaporate and is very slippery, so it must be removed from the floor thoroughly.

The eyelets of the tensioners and the first horizontal comb plate will accumulate yarn finish coating material as the yarns rub across the eyelets. When this material becomes noticeable, it is cleaned off. This is accomplished by using a cotton swab soaked in acetone. All surfaces of the eyelet or guide that come in contact with the yarn are cleaned. This also applies to the eyelets at the exit holes from the lamps; these also collect dirt and are cleaned with acetone.

During the manufacturing run, adhesive vapors and impurities from the nitrogen and the compressed air impinge upon the lamp target tubes and are oxidized and deposited on the walls of the target tubes. Eventually these deposits darken the tube enough the reduce the UV radiation incident on the FOMC. All three of the target tubes are checked after each manufacturing run and are cleaned if noticeably dirty. The target tubes are cleaned after every 20 kilometers of FOMC is manufactured, whether they appear dirty or not. Cleaning the lamp target tubes requires using methylene chloride, and a respirator mask is worn by the operator cleaning the tubes.

To clean the tubes, each lamp is opened and the target tube, with the two aluminum blocks on the ends, is removed. A rubber stopper is inserted in one end of the tube and approximately half the tube is filled with methylene chloride. A piece of steel wool is wrapped around the bristles of a tube cleaning brush and this brush is used to clean half of the tube. A rubber stopper is then inserted into the open end of the tube and the tube is turned over so that methylene chloride runs down into the opposite end of the tube. The original rubber stopper is removed and the wool-covered brush is used to clean the open end of the tube. Special care is taken at the entrance end of the tube as this end is where more impurities are introduced, and this end generally has more oxidized by-products on it.

After the tube is cleaned on the inside, the methylene chloride is poured back into its bottle. The methylene chloride will eventually become nearly opaque and have to be discarded, but it can be reused several times. Ethyl alcohol is poured into the tube, still closed at one end, to a depth of about 2 inches over the aluminum block on the end of the tube. The second rubber stopper is replaced in the open end of the tube, and the alcohol is poured back and forth inside the tube to thoroughly rinse all the surface inside. When the rinse is finished, the alcohol is poured out onto a paper towel and both rubber stoppers are placed aside. This alcohol-soaked towel is used to wipe the aluminum blocks on the ends of the tube and to wipe the outside of the tube itself.

To dry the tube, the high-pressure compressed air cleaning hose is carefully inserted into one end of the tube and turned on. The cleaning line is very carefully moved around to blow on all of the inside surface of the tube. The other end of the tube is treated the same way; then the tube is inspected to make certain that it is clean and dry inside. Before each tube is replaced and secured in the lamp, the outside of the tube is wiped with a clean, dry towel to remove fingerprints and other marks. The tube is handled with cotton liner gloves at this time to keep it clean. The tube is inspected again before it is replaced in the lamp to make sure there are no contaminants, by-products, or solvents, on the inside or outside of the tube.

While the lamp is open for tube cleaning, the quartz infrared absorbing plates are also inspected for cracks or excessive dirt. Broken plates are replaced, and dirty plates are cleaned with alcohol. The lamps and their controllers are cleaned with alcohol or water if they get dirty; acetone removes the finish and is not used.

APPENDIX A. FOMC CHARACTERISTICS

FOMC OPTICAL CHARACTERISTICS

Attenuation @ 1310 nm	Less than or equal to 0.60 dB/km (0.48 typical)
Attenuation @ 1550 nm	Less than or equal to 0.30 dB/km (0.22 typical)
Point Loss	No point loss greater than 0.1 dB

FOMC MECHANICAL CHARACTERISTICS

Outside diameter	0.0315 inch $\pm$ 0.0005 inch (0.0003 inch RMS)
Roundness	96%
Coating thickness	0.0015 inch nominal, 0.0007 inch minimum
Optical fiber eccentricity in uncoated cable	0.003 inch
Specific Gravity	1.80 $\pm$ 0.10
Surface continuity	No glass yarn filaments to be exposed at surface
Composite integrity	Existence of all 4 inner layer and 11 outer layer yarns with complete wetting of the yarns with no voids permitted

FOMC PERFORMANCE CHARACTERISTICS

Ultimate tensile strength	100 pounds minimum
Working tensile strength	30 pounds for 5 minutes with no permanent degradation of optical performance and no visible damage to cable
Crush strength	50 pounds over 0.5-meter length for 60 minutes with no damage to cable and no permanent degradation of optical performance
Bending strength	180° around a 30-mm diameter with a temporary insertion loss no greater than 0.2 dB and no permanent optical degradation or visible damage
Temperature	28°F to 113°F with a temporary insertion loss no greater than 0.1 dB/km and no permanent optical degradation or visible damage
Storage temperature	–40°F to 160°F with no permanent degradation of optical performance and no visible damage to cable
Hydrostatic pressure	9000 psi for 18 hours with a temporary insertion loss no greater than 0.05 dB/km and no permanent degradation of optical performance or visible damage to the cable

Water resistance	Ultimate tensile strength of 90 pounds minimum after 90 days of immersion at temperatures between 32°F and 95°F

APPENDIX B. ULTRAVIOLET-CURING SYSTEM SPECIFICATION

Aetek International, Inc.
(formerly RPC Industries)
1750 N. Van Dyke Road
Plainfield, IL 60544
(805) 436–2304

Model: **UVXL 250134A**

Specifications:

- Mercury UV-curing system
- Adjustable power settings: 200/300/400 watts per inch
- 25-inch lamp length
- Nitrogen inerting of the target area
- System can provide uniform irradiation around a 0.020-inch to 0.050-inch diameter cable for a length of nominally 25 inches
- Forced air cooling

APPENDIX C. PRELIMINARY ADHESIVE TESTS

The following tests were developed to permit an initial evaluation to be performed on new UV-curable adhesives to ascertain their applicability in the fabrication of FOMC.

ADHESIVE/FIBERGLASS WETTING

The test consists of simply placing or dragging a section of the fiberglass yarn through a sample of the uncured adhesive. Tension of the yarn should be kept low, but not slack. Observations are made to ascertain the following yarn/adhesive wetting characteristics:

(a) Highly viscous adhesives do not wet the glass well, but rather the yarn tends to displace the adhesive when contact is made between the yarn and the adhesive.

(b) A color change in the yarn occurs, changing from an opaque white to a translucent silver color. For proper wetting within the fabrication system, this color change should occur within 2.5 seconds of initial glass/adhesive contact.

(c) The adhesive should wick into yarn areas adjacent to, but not in direct contact with, the adhesive.

An adhesive/yarn combination wetting test that results in quick color change plus additional wicking tends to produce a fully integrated FRP jacket.

WATER ABSORPTION

This test determines the change in adhesive weight due to water absorption versus immersion time in a 73°F water bath. Film samples were fabricated (fabrication procedure follows) and weighed to determine their initial weight characteristics. The samples were then immersed in the water bath. After 24, 48, 72, 96, and 120 hours immersion, the samples were removed, "patted" dry to remove any surface water, and weighed. The weight increase was noted as a percentage change in the film sample weight. Acceptable adhesives resulted in a weight change of no greater than 1.5%.

Film Sample Fabrication Procedure:

(1) Using a "Bird" bar, spread a 0.005-inch-thick adhesive layer over a clean glass plate.

(2) Cure the adhesive film by exposure to an UV light source.

(3) Cut the film samples to approximately 6 inches long and 0.75 inch wide from the adhesive film. A razor blade or medical scalpel are appropriate for cutting the adhesive film without damaging the sample.

(4) Carefully remove the film sample from the glass backing.

YOUNG'S MODULUS; ULTIMATE TENSILE STRENGTH, STRAIN AT FAILURE

This test series determines the effect of water immersion on the adhesive's modulus, tensile strength, and strain characteristics. Film samples were fabricated as above and immersed in a

73°F water bath for 24, 48, 72, and 96 hours. After immersion the samples were removed, measured for thickness and width, and then subjected to tensile loading in a standard Instron™ tensile test machine. (It should be noted that consistent test results are obtained if the adhesive film sample length between the clamping fixtures is no less than 3 inches in length.) The strip chart data permits evaluation of the following physical characteristics:

$$\text{Ultimate Tensile Strength} = \frac{\text{load at failure}}{\text{film cross-sectional area}}$$

$$\text{Strain at Failure} = \frac{\text{sample deflected length at failure}}{\text{loaded sample length}}$$

$$\text{Young's Modulus} = \frac{\text{Ultimate Tensile Strength}}{\text{Strain at Failure}}$$

Acceptable adhesives have the following characteristics after immersion:

Ultimate Tensile Strength:	2500 psi or greater
Strain at Failure:	2%
Young's Modulus:	the modulus value would level off at a minimum of 100 kpsi after 72 hours immersion

APPENDIX D. OPTICAL FIBER SPECIFICATIONS

Corning Single Mode, Dispersion-Shifted Optical Fiber

Corning Incorporated
Telecommunications Products Division
310 N. College Road
Wilmington, NC 28405
(607) 974-4411

Product name: SMF/DS-HFR Fiber

Specifications:

- Fiber diameter: 250 μm
- Coating: CPC3
- One splice allowed
- 100 kpsi prooftest
- Splice prooftested to 150 kpsi
- Attenuation: less than or equal to 0.25 dB/km
- Mode field diameter: less than or equal to 8.3 μm
- Cutoff wavelength: greater than or equal to 1200 nm

APPENDIX E. FOMC OVERCOATING DEVELOPMENT

BACKGROUND

During field testing of the FOMC for the Mk-48 ADCAP Program, it was found that the FOMC was abrasive enough to cut through the steel payout tube inside the torpedo. Some cutting occurred under both "wet" and "dry" deployment tests.

It was determined that the most effective technique to prevent cutting would be a nonabrasive coating on the FOMC. This jacket had to be tough enough not peel off during deployment, smooth enough not to wear the payout tube, and thin enough to allow the same length of FOMC to be packaged inside the torpedo. The jacket could not cause a degradation of any of the physical or optical characteristics of the FOMC. And finally, the manufacturing criteria (cost, production rate, and materials availability) that originally applied to the FOMC had to also apply.

APPROACH

By the time development of this jacketing overcoat began, there was a wide variety of UV-cured materials available from multiple sources. Since the FOMC already used UV-curing technology, this was chosen for the overcoat as well. Very early in the FOMC development, a pressurized flow-coating system had been purchased from Sancliff, Inc. This system had never been used, but seemed to be an ideal technique for applying a UV-cured overcoat to the FOMC.

Initial testing demonstrated that the FOMC could be overcoated using the pressurized flow-coating die. Development and testing then centered on finding a suitable coating material. Coating material tests were conducted in the original FOMC Research and Test Plant. Figure E-1 shows a cross section of the FOMC with the overcoat, with dimensions.

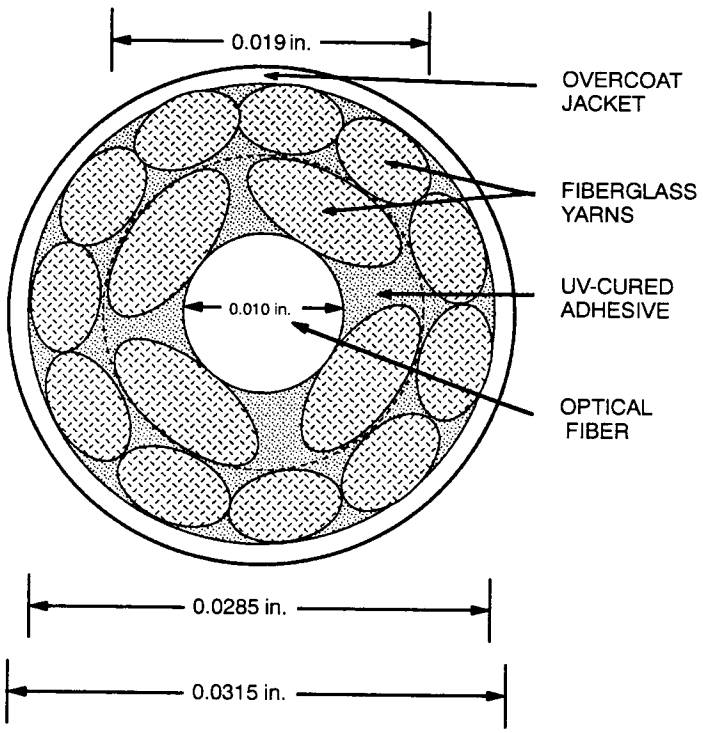

Figure E-1. Cross section of FOMC with overcoat.

OVERCOATING MATERIALS

Discussions with the UV-curable materials manufacturers providing materials for the FOMC led to two candidate products for the overcoat: De Soto 3287-8-9 Cablelite© and Masterbond UV-15-7SP4. Both materials were tested. Both materials performed well in laboratory payout testing conducted at NRaD. The Masterbond material was harder and seemed more brittle. The De Soto material was also hard, and felt more slippery. The De Soto material was selected for further testing based on the feel of the surface and cost.

Next, a variety of additives were investigated. Additives were considered to reduce friction between the overcoated FOMC and the payout tube and also to increase toughness of the overcoat. The most significant problem with the additives was mixing. The added material had to mix thoroughly and homogeneously and remain mixed throughout the length of the fabrication run, up to almost 17 hours. Because the jacketing material is under pressure in the stainless steel holding tank during fabrication of the FOMC, the mixture of coating material and additives cannot be stirred without significant modifications to the pressure pot. In addition, the additives had to be inert with respect to the coating and the additives could not be substances that would block penetration of UV light into the uncured coating.

The first additive mixed was a fused silica, which was added to promote suspension of other additives in the jacketing material. However, the silica itself would not stay suspended long enough to be useful. Finely powdered Teflon was added, but did not mix well. Polyethylene and synthetic crystalline waxes and calcium stearate were being considered when tests on the overcoat material without additives indicated that the additives were unnecessary. NRaD was also considering surfactants (Silwet™ by Union Carbide and Fluorad™ by 3M) to improve mixing, but those additive materials were not tested.

FLOW-COATING SYSTEM HARDWARE

The pressurized flow-coating system was purchased from Sancliff, Inc. The flow-coating head comprises two forming surfaces, the second slightly larger than the first. The geometry of these forming surfaces is similar to that of forming dies. Between the two forming surfaces is a reservoir space filled and pressurized from the pressure pot. Because the overcoat jacket is not an FRP and is very thin, a Fusion Systems UV lamp was selected to cure the overcoat. Testing with the flow-coating system showed that a pressure of approximately 15 psi in the flow-coating head produced a smooth, regular jacket over the FOMC.

Testing in the Research and Test Facility also showed that the FOMC would have to be "wiped" to remove short sections of yarn filaments that had been broken during FOMC fabrication, then cured into the FRP matrix. These filaments project from the surface of the FOMC and break off during the overcoating process, clogging the second forming surface of the pressurized flow-coating head. The immediate effect of this is to destroy the uniformity of the jacket, and the clogging will eventually break the FOMC. To wipe the FOMC, a series of foam blocks were installed in the fabrication line and the FOMC was passed through them. The blocks catch, break, and hold the filament fragments.

A second problem discovered during testing in the Research and Test Plant was that of centering the FOMC within the flow-coating die. The jacket is very thin (nominally 0.0015 inch). Although the pressure head is self-centering, it is critical to align the FOMC parallel to the axis of

the two forming surfaces of the die. The FOMC must be held securely before entering the flow-coating head and after it is cured and cooled, and the FOMC must not be allowed to strum in that length.

INSTALLATION INTO THE FOMC FABRICATION PILOT PLANT

Figure E-2 shows the layout of the overcoating hardware as it was installed in the FOMC Pilot Production Facility. In the direction of cable movement, the first components are sheaves used to align the FOMC roughly prior to entering the flow-coating head. After the sheaves is a foam block holder. A section of foam is cut to the appropriate size and a cut is made down the length of the block. The block is inserted into the holder and the cable is strung through the slot during startup. After the first foam block, there is a high-pressure air wiper setup. This is a vinyl block hinged on one side with troughs cut one each side to form a hole for the passage of the FOMC. The air wiper blows dirt and broken filament fragments off the surface of the FOMC. Following the air wiper is another foam block holder, immediately preceding the flow-coating head. The flow-coating head, the overcoat material tube, the pressure pot, and the flow-coating controller are all shown. The next component is the Fusion Systems lamp, which is followed by three small cooling fans. The fans ensure that the coating is cooled and will not deform when it comes in contact with the last components shown; two pair of sheaves set orthogonally to hold the jacketed FOMC before it is reeled onto the take-up system. Installing the flow-coating system in line with the FOMC fabrication system presented no problem. The power of the Fusion Systems lamp and the speed of cure of the jacketing material are ample to keep the production speed at 72 fpm, the limit imposed by the FRP curing.

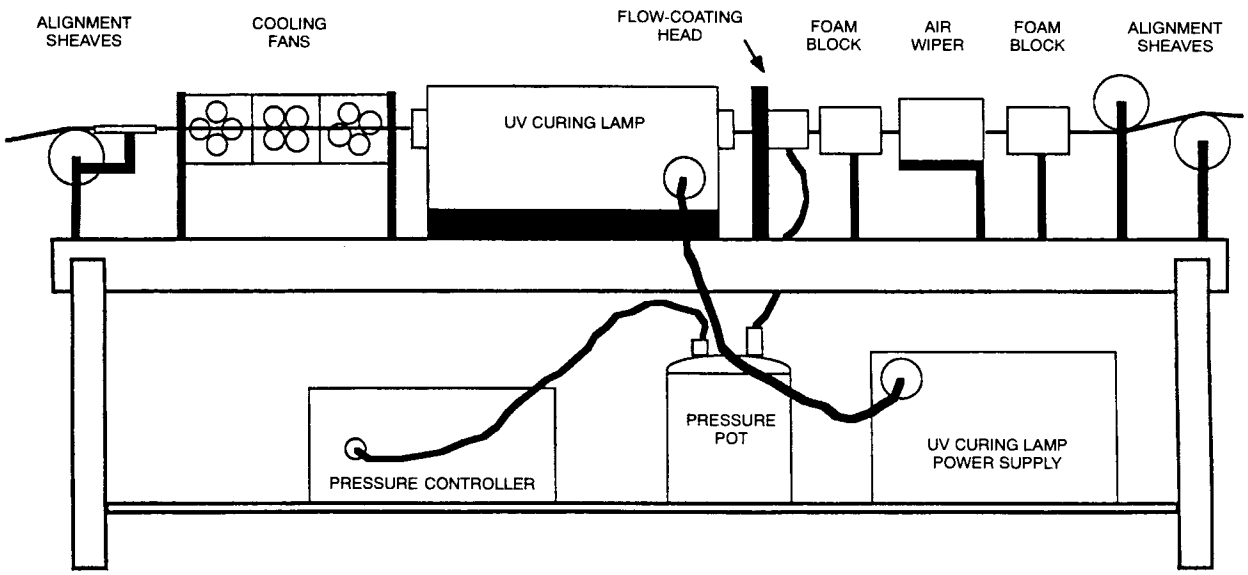

Figure E-2. FOMC overcoating system hardware.

APPENDIX F. FINAL CHANGES TO THE FOMC PILOT PRODUCTION PLANT

HORIZONTAL YARN PAYOUT

The most significant problem encountered in the manufacturing of FOMC has always been the occurrence of built-up bundles of broken yarn filaments. These occur most often at the circular comb plate, but have also occurred at every point where yarn contacts an eyelet, rod, or die. These bundles represent a risk to remove as well as an eventual break in the yarn if left alone. The formation of these filament bundles are, in fact, the only practical limit to production yield other than human error.

Creels for vertical payout of the yarns were easy to design and build and the magnitude of the yarn build-up problem was unknown when the pilot fabrication facility was designed and built. Horizontal payout was considered at that time, but since the vertical payout technique was successful in manufacturing high-quality FOMC, the decision was made to keep the same technique.

Once the manufacturing technology and the operating procedures were well established, it became evident that eliminating abrasion on the yarns would increase the production yield of the facility. The yarns contact three guide eyelets between the yarn bobbin itself and the eyelet in the back of the wetting box, and by changing from vertical to horizontal payout, these three contacts could be eliminated.

A horizontal payout system of PVC pipe was designed that allowed each bobbin to be "aimed" at the guide eyelet in the wetting box the yarn would go through. The new creels were constructed with 8 bobbin holders in the first creel and 16 in the second, so that development of different FOMC configurations could continue.

The horizontal creels have been used to manufacture hundreds of kilometers of FOMC and have worked well. There have been fewer filament bundles since the horizontal creels were installed and production yield has been nearly 100%.

HEAT TUBE FIBER DRYING

Once the FOMC had been demonstrated in several Navy programs, demand for test samples increased. In particular, the Mk-48 ADCAP program required several hundred kilometers of FOMC. The capacity of the drying oven and the minimum 2-week drying period became a limit to the production rate as more cables could be manufactured in 2 weeks than could be dried in the oven.

Standard industry practice is to dry optical fibers by using a heated tube section and raising the temperature enough to rapidly evaporate water immediately before the fiber is used in whatever the application happens to be. With the advent of the drying oven problem, NRaD designed a heated drying tube to install in the FOMC fabrication system.

The tube is a 3-foot section of double-walled galvanized pipe. Heating is provided by a heat gun wired into a feedback-controlled temperature controller built by NRaD for this purpose. The temperature is set on the controller and a thermocouple installed in the heat tube sends a temperature-related signal to the controller.

This system was installed while the FOMC fabrication system was out of service to install the horizontal yarn creels. The heat tube allowed the removal of the infrared lamp in the fiber payout box, it removed the limit of the drying oven, and it reduced the amount of nitrogen expended during manufacturing since the fiber payout box does not have to be flooded with nitrogen anymore. The heat tube has been used for the same period as the horizontal yarn creels, and there has been no detectable change in the properties of the FOMC. Because the adhesive and the curing process are very sensitive to the presence of moisture, this is a good indicator that the heat tube is effective.