Space and Naval Warfare Systems Center
San Diego, CA 92152-5001

TECHNICAL MANUAL 708 Rev 1

Integrated Installation Team Standard Process Manual

Approved for public release; distribution is unlimited.

Publishing authority: Space and Naval Warfare Systems Center, San Diego, CA 92152-5001

Space and Naval Warfare Systems Center
San Diego, CA 92152-5001

TECHNICAL MANUAL 708

Integrated Installation Team Standard Process Manual

Approved for public release; distribution is unlimited.

Publishing authority: Space and Naval Warfare Systems Center, San Diego, CA 92152-5001

MAY 2001

RECORD OF CHANGES

Change Number	Date of Change	Date Entered	Printed Name of Person Making Change
IITSPMA-001-1			

Record of change numbering convention is as follows:

I – Integrated
I – Installation
T – Team
S – Standard
P – Process
M – Manual
A – Afloat

001 – the serial number of the change

- 1 – indicates that the current change will be incorporated into the future Revision 1 to the manual; a –2 indicator would relate to Revision 2, and so on.

PREFACE

1. Purpose. This Integrated Installation Team Standard Process Manual provides policy- related process management guidelines for all codes and teams of Space and Naval Warfare Systems Center, San Diego (SSC San Diego) involved in advance planning and executing afloat Command, Control, Communications, Computers, Surveillance, and Reconnaissance (C4ISR) alteration installations. It is to be used as an indoctrination tool, a training aid, and a timeline and event-oriented guide. C4ISR alterations include permanent Ship Alterations (SHIPALTs), Temporary ship Alterations (TEMPALTs), software installations, field changes (FC), etc., and any system upgrades or installations to surface ships and submarines.

2. Discussion. A manual or handbook such as this can be updated frequently, and can stay in synchronization with dynamic change (Fleet and gate-keeping requirements, or even internal reorganizations.) No single document can encompass all possible scenarios, processes, and conditions, but to the extent possible, this manual provides general and specific success-oriented guidance.

Initially, this manual will guide all concerned along the road to and through Chief of Naval Operations (CNO) availabilities. At first, it will mostly address installations on surface ships. To the extent possible, particular process aspects peculiar to submarine installations will be incorporated.

Installations are conducted by Integrated Installation Teams (IIT) under the management of the Installation Management Office (IMO), through the leadership of senior, experienced Division Heads known as IIT Leads.

This manual and changes thereto are Web accessible at http://d60.spawar.navy.mil

3. Using This Manual. Before reading the processes, it is recommended that you orient yourself to the overall structure by reviewing the Table of Contents. Two appendices should also be reviewed before any other reading. The Glossary (Appendix P) and the Roles and Responsibilities (Appendix K) will provide the terms and the overview necessary to fully understand the processes presented in this manual.

Throughout the manual, the title of SSC San Diego's single point of contact and Agent representing the Center's Integrated Installation Teams (Ship Superintendent) will be abbreviated in two ways: Ship Sup and SS. None of the aforementioned titles/ abbreviations should be confused with the term SUPSHIP (Supervisor of Ships), which is both a Naval Sea Systems Command (NAVSEA) echelon-3 command's title, and colloquially used to refer to individuals that represent SUPSHIP when functioning as Naval Supervising Activity (NSA) pertaining to ship availabilities.

Two timelines are referred to throughout this Manual. The first is the D-30 process timeline, which is a Fleet CINC established process to guide the integrated modernization of a Battle Group. It is keyed to count down the months leading to the start of the deployment. The other timeline references the start of an availability for a specific ship. It is listed as A-days to start of availability. Under each of these timelines there are major milestones that need to be met and products from them that lead to successful integrated installations.

The diagram below shows how these two timelines might line up in a notional case for a ship's CNO availability.

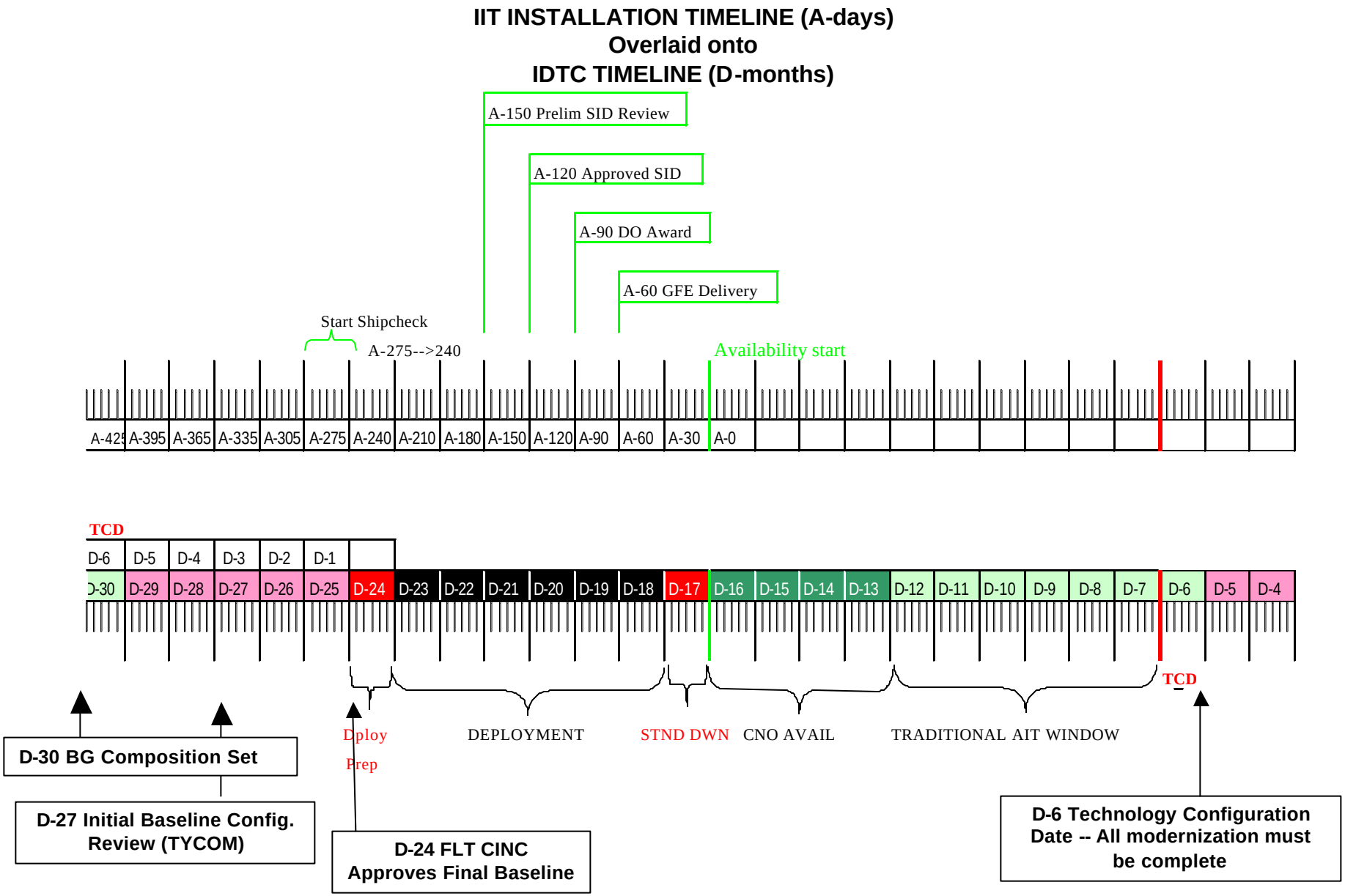

4. Manual Maintenance. The Installation Management Office (IMO) is responsible for producing and maintaining this and other manuals pertaining to C4ISR installations. This manual will undergo a quarterly review, but process change inputs should be forwarded to the IMO on an as-occurring basis. Thus, when an urgent change to processes must be communicated quickly, the IMO will promulgate such changes through a serialized Process Change Notice.

Table of Contents

AFLOAT IIT STANDARD PROCESS 1

1.1 PERFORM ADVANCE PLANNING (D32 TO D19) 2
1.2 CONDUCT PRE-INSTALLATION 2
1.3 MANAGE INSTALLATION 3
1.4 CONDUCT SOVT/OJT 3
1.5 WRAP UP POST-INSTALLATION WORK 3

PERFORM ADVANCE PLANNING PROCESS 4
1.1 INITIATE ADVANCE PLANNING PHASE 5
1.1.1 Determine Deployment Configuration Current & Future (A-360) 5
1.1.1.1 Verify group composition 6
1.1.1.1.1 Verify name of single deploying group 6
1.1.1.1.2 Identify the name and hull number of all the ships in the single deploying group 6
1.1.1.1.3 Contact current IIT for each ship 6
1.1.1.1.4 Obtain the ship's schedules 7
1.1.1.1.5 Contact respective ship's POC. 7
1.1.1.1.6 Obtain C4ISR Installation package information 7
1.1.1.2 Determine tasks 7
1.1.1.3 Determine primary and secondary installation windows and shipcheck dates 7
1.1.2 Attend SPAWAR 04F Advanced Planning Meeting 8
1.1.3 Coordinate with Design War Room to Determine Shipcheck Dates. 8
1.1.4 Coordinate Ship Check Plan with Naval Technical Representatives. 8
1.1.5 Receive Shipcheck Funding (A-330) 8
1.1.6 Receive SID Funding (A-330) 9
1.1.7 Track Shipcheck (A-300) 9
1.1.8 Assign Ship Sup (A-180) 9
1.1.9 Conduct Transfer of Ship Planning Data (A-180) 9
1.1.10 Verify Alteration Maturity (A-180) 10
1.1.10.1 Review status via RMMCO Master List 10
1.1.10.2 Review status via IDB 10
1.1.10.3 Resolve status differences between RMMCO Master List and SPAWAR 04 source data from IDB 10
1.1.10.4 Track to resolution, all deficiencies 11
1.1.11 Commence Monthly Planning SITREPS 11
1.1.12 Prepare for WPIC (A-180 to A-150) 12
1.1.12 Prep for WPIC 12
1.1.12.1 Obtain AIT UPD from each NTR with Notional POA&Ms 12
1.1.12.2 Consolidate UPDs into one integrated IUPD 13
1.1.12.3 Integrate POA&Ms to Identify conflicts 13
1.1.12.4 Conduct pre-WPIC UPD/POA&M review w/NTRs 13
1.1.12.5 Review ship alt auth letter 13
1.1.12.6 Request additions or deletions 13
Review Preliminary SID (A-150) 14
1.1.13 SID Review 14

1.1.14 Receive Approved SID (A-120) 15
1.1.15 Attend Work Planning Integration Conference (WPIC) (A-120) 15
1.1.16 Receive/Verify/Respond to Industrial Program Manager (IPM) AIT ID E-mail (A-115) 15
1.1.17 Review IPM Tasking Message (A-105) 15
1.1.18 Receive IPM Estimate (A-105) 15
1.1.19 Review Current SHIPALT Authorization Letter (A-105) 16
1.1.20 Provide Approved Drawings (A-100) 16

PRE-INSTALLATION PROCESS 17
1.2 INITIATE PRE-INSTALL PHASE 18
1.2.1 Receive Funding for Install (A-90) 18
1.2.2 Review IPM Action Message (A-90) 18
1.2.3 Provide Funding to IPM (A-75) 18
1.2.3 IPM Funding Process 18
1.2.3.1 Provide information 18
1.2.3.2 Prepare Outgoing Funding Document (OFD) 18
1.2.3.3 Route OFD 19
1.2.3.4 Process OFD 19
1.2.4 Verify Equipment Delivery (A-60) 19
1.2.5 Deliver CO to CO Letter (A-60) 19
1.2.6 Attend Advanced Planning Meeting (A-60) 19
1.2.7 Award DO (A-40) 19
1.2.7 Award DO Process 20
1.2.7.1 Generate DO 20
1.2.7.2 Route DO 20
1.2.7.3 Process DO 20
1.2.8 Check in with RMMCO (A-30) 20
1.2.9 Review IPM Readiness To Start Message (A-30) 20
1.2.10 Invite IPM to A-15 In-Brief (A-30) 20
1.2.11 Send Ready to Start Message (A-30) 21
1.2.12 Attend Advanced Planning Meeting (A-30) 21
1.2.13 Commence Weekly IIT SITREP (A-30) 21
1.2.14 Send Government Clearance Message (A-22) 21
1.2.15 Conduct In-Brief (A-15) 21

APPENDICS
A – SHIPCHECK PROCESSS **A-1**
B – WEEKLY/MONTHLY PLANNING SITREP **B-1**
C – GENERIC INSTALL GANTT CHART POAM **C-1**
D – SHIP INSTALLATION PLAN MESSAGE **D-1**
E – IN-BRIEF TEMPLATE **E-1**
F – SHIP CO LETTER **F-1**
G – GOVERNMENT CLEARANCE MESSAGE **G-1**
H – AFLOAT FUNDING PROCEDURES **H-1**
I – SOW/DO DEVELOPMENT/PREPARATION **I-1**
J – AIT UNIVERSAL PLANNING DOCUMENT **J-1**
K – ROLES AND RESPONSIBILITIES **K-1**
L - CORN **L-1**
M – ITT CALENDAR OF EVENTS **M-1**
N - LAR **N-1**

O – IDB/CETRACKER **O-1**
P - GLOSSARY **P-1**

AFLOAT IIT STANDARD PROCESS

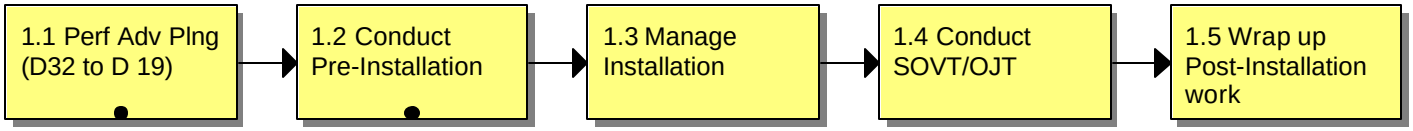

1.1 PERFORM ADVANCE PLANNING (D32 TO D19)

The IIT is responsible for conducting the following advanced planning process in accordance with the following timeline. These timelines contain no later than (NLT) milestones:

Time	Step #	Action	Responsibility	Completed
A-390	1.1.1	Determine Deploy Configuration	BFO/BFS	☐
Varies	1.1.2	Attend 04F Advance Planning Meeting	BFO/BFS	☐
A360-345	1.1.3	Coordinate with Design War Room	BFO/BFS	☐
A345-330	1.1.4	Coordinate S/C Plan with NTRs	BFO/BFS	☐
A-330	1.1.5	Receive Shipcheck funding	BFO/BFS	☐
A-330	1.1.6	Receive SID funding	BFO/BFS	☐
A-300	1.1.7	Track Shipcheck	BFO/BFS	☐
A-180	1.1.8	Assign Ship Sup	IIT Lead	☐
A-180	1.1.9	Conduct Transfer of Ship Planning	BFO/BFS	☐
A-180	1.1.10	Verify Alteration Maturity	Ship Sup	☐
A-180	1.1.11	Commence Monthly Planning SITREPS	Ship Sup	☐
A150-180	1.1.12	Prep for WPIC	Ship Sup	☐
A-150	1.1.13	Review Preliminary SID	NTR	☐
A-120	1.1.14	Receive Approved SID	NTR / Ship Sup	☐
A-120	1.1.15	Attend WPIC	Ship Sup	☐
A-115	1.1.16	Respond to IPM AIT ID email	Ship Sup	☐
A-105	1.1.17	Review IPM Tasking Msg	Ship Sup	☐
A-105	1.1.18	Receive IPM Estimate	Ship Sup	☐
A-105	1.1.19	Review Current Ship Alt Auth Letter	Ship Sup	☐
A-100	1.1.20	Provide Approved Drawings	Ship Sup	☐

1.2 CONDUCT PRE-INSTALLATION

Time	Step #	Action	Responsibility	Completed
A-90	1.2.1	Receive Funding for Install	BFS/Ship Sup/ NTR	☐
A-90	1.2.2	Review IPM Action Message	BFS/Ship Sup	☐
A-75	1.2.3	Provide Funding to IPM	BFS/Ship Sup / NTR	☐
A-60	1.2.4	Verify Equipment Delivery Dates	Ship Sup / NTR	☐
A-60	1.2.5	Deliver CO to CO Letter	Ship Sup	☐

A-60	1.2.6	Attend Advance Planning Meeting	Ship Sup	☐
A-40	1.2.7	Award DO	Ship Sup / NTR	☐
A-30	1.2.8	Check in with RMMCO	Ship Sup / NTR	☐
A-30	1.2.9	Review IPM RTS Message	Ship Sup	☐
A-30	1.2.10	Invite IPM to A-15 In-brief	Ship Sup	☐
A-30	1.2.11	Send Ready to Start Messaging	Ship Sup	☐
A-30	1.2.12	Attend Advanced Planning Meeting	Ship Sup	☐
A-30	1.2.13	Commence weekly IIT SITREP	Ship Sup	☐
A-22	1.2.14	Send Government Clnc Message	Ship Sup / NTR	☐
A-15	1.2.15	Conduct In-brief	Ship Sup / NTR	☐

1.3 MANAGE INSTALLATION

1.4 CONDUCT SOVT/OJT

Include end-to-end test in this process

1.5 WRAP UP POST-INSTALLATION WORK

PERFORM ADVANCE PLANNING PROCESS

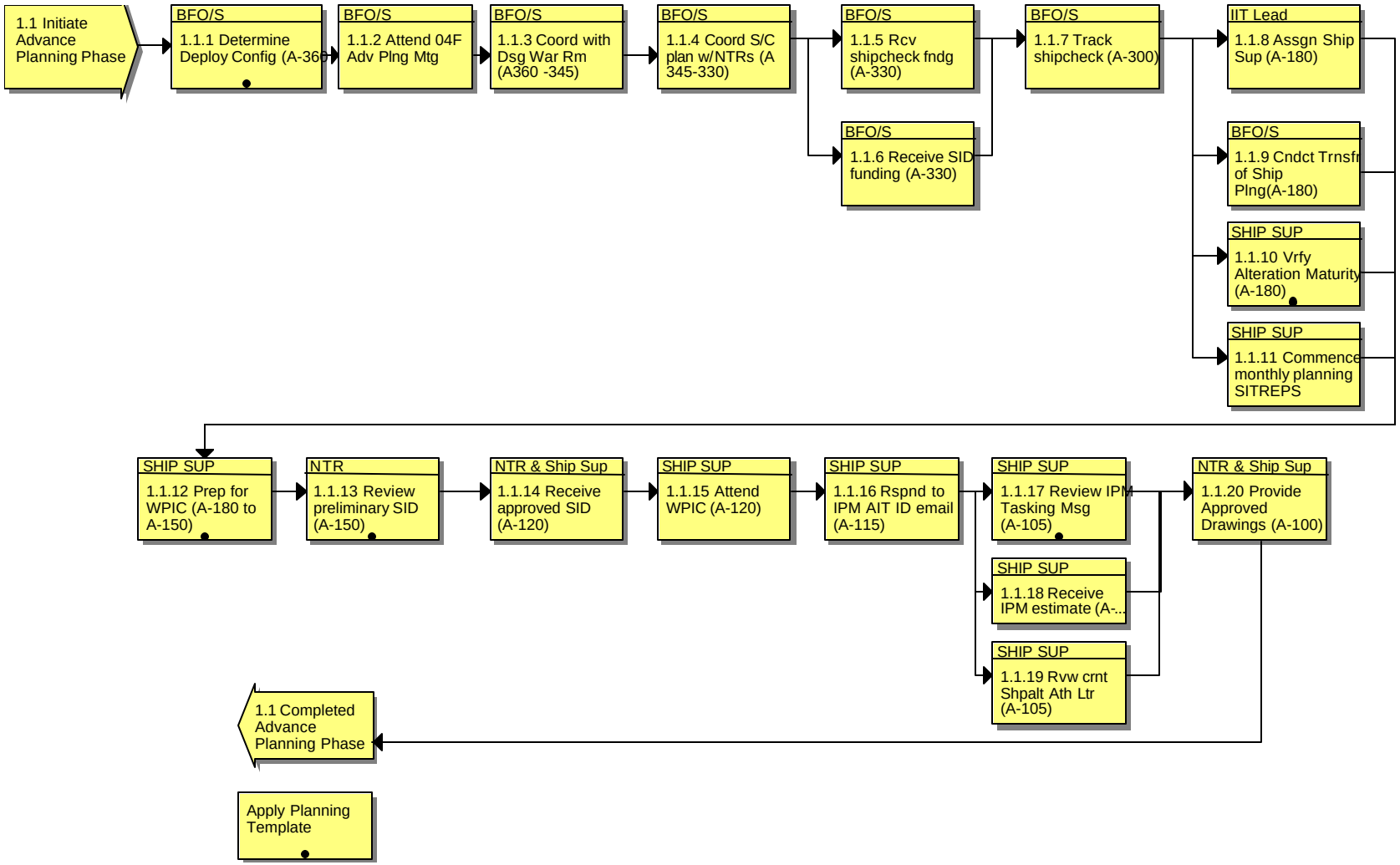

1.1 Initiate Advance Planning Phase

Note: All tasks should be executed by Ship Sup if currently assigned to a given hull. Otherwise, execution is carried out by Battle Force Officer (BFO)/Battle Force Superintendent (BFS) (BFO/S).

1.1.1 Determine Deployment Configuration Current & Future (A-360)

This is formally tasked from the composition message—afloat matrix—and prior year as tasked by Space and Naval Warfare Systems Command (SPAWAR) 04 Directorate. These are notional dates for the usual case. Exact dates must be calculated so that shipchecks can occur before the deployment previous to the D-30 deployment cycle under advance planning.

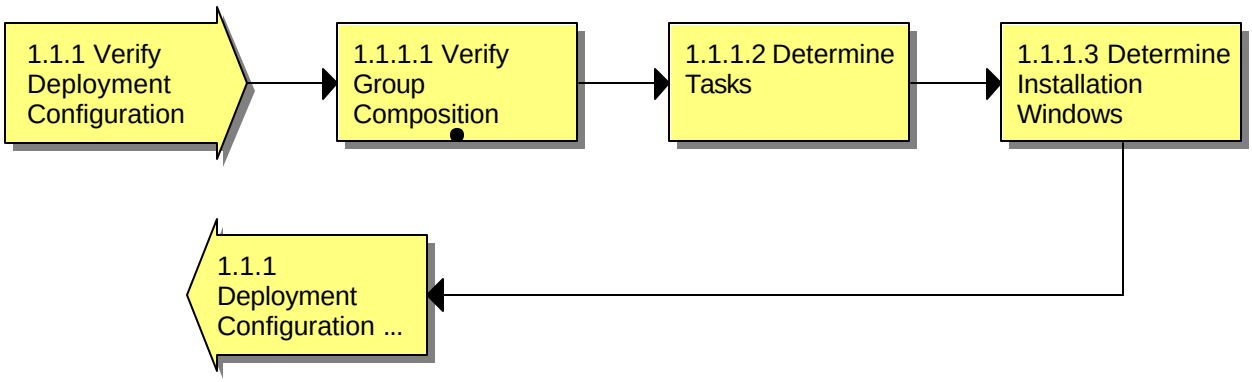

1.1.1.1 Verify group composition

The first step in advanced planning is the determination of the ships that the Fleet CINC has assigned to the Battle Force for which you are responsible. A deploying group is assigned to an Integrated Installation Team (ITT). A Battle Force typically consists of the ships assigned to a Battle Group (BG), an Amphibious Readiness Group (ARG), and a few (one to three) Maring Expeditionary Forces (MEFs). "Other" groups that may be assigned to a deploying group for installation planning and tracking purposes are Cooperation Afloat Readiness and Training (CARAT) groups and Counter Drug Operations groups (CDOPS), Naval Special Warfare Squadron (NSWRON). In addition to U.S. Navy ships, it is also likely that an allied Navy ship and/or a Coast Guard vessel may be assigned as part of the Battle Force.

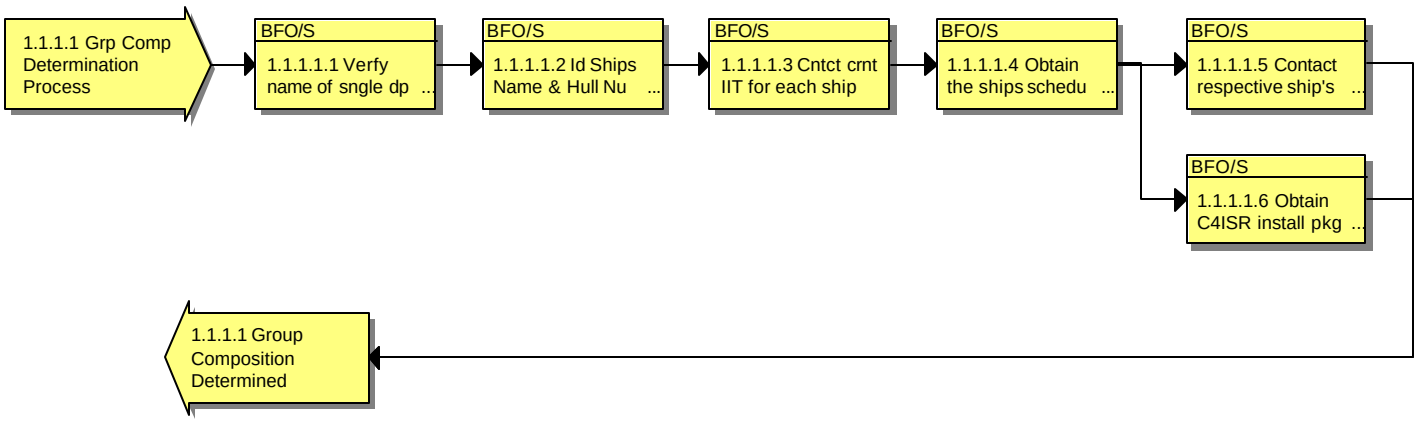

1.1.1.1.1 Verify name of single deploying group

This name is keyed on the capital ship of the force and the associated calendar year the Force deploys.

1.1.1.1.2 Identify the name and hull number of all the ships in the single deploying group

This can be done through the following methods (from the most accurate to the least accurate):
1. D-30 Battle Group composition message via message traffic
2. Commander Naval Surface Force U.S. Pacific Fleet (CNSP) Battle Group matrix via e-mail
3. SPAWAR 04 deployment schedules via e-mail

1.1.1.1.3 Contact current IIT for each ship

A ship in the single deploying group may be part of an upcoming Battle Force or it may be assigned to the "Other" category mentioned in the "Determine Group Composition" step.

1.1.1.1.4 Obtain the ships schedules

Sources for the information include:
D-30 Battle Group composition message via message traffic
Quarterly CNSP visit scheduling messages via message traffic
CNSP Battle Group matrix via e-mail
SPAWAR 04 deployment schedules via e-mail
Fleet Modernization Program Management Information System (FMPMIS) via Internet
CNSP Projected Maintenance Schedules via e-mail
COMSUBPAC/SSC San Diego Quarterly Scheduling Conference

1.1.1.1.5 Contact respective ship's POC

This is an excellent time to be introduced to the Point of Contact (POC) on the ship's company. The POC is usually the Combat Systems Officer (CSO) or Electronic Material Officer (EMO). (CSMO in the case of a CV/CVN, COMMO, or C4I officer in the case of some LHA/LHDs.) On AEGIS ships, the Systems Test Officer (STO) may be the POC. For submarines, the Navigator (NAV) or Weapons Officer (WEPS) is normally the POC.

1.1.1.1.6 Obtain C4ISR Installation package information

Build a picture of the C4ISR installation package SPAWAR has installed or is currently installing as well as any difficulties the ship may have encountered recently related to SPAWAR installations. Sources for this information include Ship Sup's and BFO/BFS from the previous cycle, or the SPAWAR 04F capabilities matrix, or historical data archived in the Installation Database (IDB).

1.1.1.2 Determine tasks

As SSC San Diego is only tasked on a yearly basis, advanced planning for specific installations can be somewhat difficult. Sources of information in reaching the goal of task determination are:

- SPAWAR 04 work plan via the IDB. Note: if you are planning for a future fiscal year a good hint as to which installations you can expect to install in that fiscal year can be found in the current fiscal year work plan if that system has any advanced planning (shipcheck or Ship Installation Drawing (SID) development) assigned
- Current and draft versions of the Afloat C4ISR Matrix
- CNO IT21 Matrix

1.1.1.3 Determine primary and secondary installation windows and shipcheck dates

Two installation windows are required for planning purposes: a primary and secondary. For ships, the primary installation window is the CNO availability; availability dates or installation dates (preferred) are required to be entered into the Installation Database (IDB) by Battle Force Superintendent, or by Ship Superintendent when assigned. For submarines, availability windows are coordinated quarterly with Type Commander (TYCOM); as with ships, the availability date or installation dates (preferred) are required to be entered into the IDB.

The secondary installation window is coordinated between the IIT, ship, ISIC, and TYCOM, and is determined by taking into consideration the employment schedule of each ship. Choose a secondary installation window that you can reasonably arrange,

taking into consideration the installation window requirement and the operational requirements of the ship. You should also consider the SID and Equipment Estimated Delivery Dates (EDD), allowing sufficient time to meet the A-120 and A-60 milestones respectively as much as possible. A good Rule of thumb is to designate D-14 to D-11 (14 to 11 months before the deployment date) as the start date of the secondary installation period.

Inform the TYCOM of any secondary (or tertiary, etc.) installation windows that may be needed as soon as possible. It is imperative that these windows be reasonably feasible to avoid continuous changes being submitted to the TYCOM. Finally, enter installation dates (confirmed or tentative) for all tasked installs into the IDB via TLM in IDB.

1.1.2 Attend SPAWAR 04F Advanced Planning Meeting

Attend your SPAWAR 04F-sponsored Battle Force advanced planning meeting. Work to confirm that the D-28 Base Line Configuration message is represented in the tasking through the IDB.

1.1.3 Coordinate with Design War Room to Determine Shipcheck Dates

Review Planning Yards (PY) shipcheck dates in the IDB. Discuss and resolve disparities with SPAWAR 04R3 focusing on what was offered to the Fleet and what is planned for shipchecks. This does not apply to submarines due to lack of submarine PY representation in the Design War Room.

1.1.4 Coordinate Ship Check Plan with Naval Technical Representatives

The general rule is that Naval Technical Representatives/Subject Matter Experts (NTR/SME) are to attend all shipchecks. However, if schedule conflicts or tech code decision results in nonparticipation, this will be coordinated with IIT Lead.

In all cases, NTR/SMEs must review shipcheck report and provide comments to the Design Center and IIT.

Communicate to respective system NTR/SME Branch Heads shipcheck dates and attendance requirements.

With the exception of submarines, shipcheck dates are determined by the planning yard and are provided to the BFO/BFS.
See appendix A for shipcheck process.

1.1.5 Receive Shipcheck Funding (A-330)

These are notional dates for the usual case. Exact dates must be calculated so that shipchecks can occur before the deployment previous to the D-30 deployment cycle under advance planning.

If there are systems that have been offered to the Fleet, but are not yet tasked, continue advanced planning to tasking with SPAWAR 04F/R.

If task items are not funded, send e-mail to IMO manager detailing requirements.

1.1.6 Receive SID Funding (A-330)

These are notional dates for the usual case. Exact dates must be calculated so that shipchecks can occur before the deployment preceding the D-30 deployment cycle under advance planning. This time frame is approximately D-34 or A-300 in the notional ship cycle.

This funding supports NTR/SME participation in the shipcheck and most importantly reviews of draft SIDs. SID reviews are timed to occur at A-150 or 150 days before the start of the CNO availability, and coordinated through the Design Center. If task items are not funded, send e-ail to IMO manager detailing requirements.

1.1.7 Track Shipcheck (A-300)

As of A-300, shipcheck previously coordinated should be complete.
The general rule is that NTR/SMEs are to attend all shipchecks. However, if schedule conflicts or tech code decision results in nonparticipation, this will be coordinated with the IIT Lead.
In all cases, NTR/SMEs must review shipcheck report and provide comments to the Design Center.

1.1.8 Assign Ship Sup (A-180)

The earlier in this process that a Ship Sup can be identified the better. Ship Sup's involvement up until this point would have been 1/4 time. After A-180, at least halftime may be required.
This A- date is notional; however, assignment of Ship Sups must occur by A-180 to facilitate planning actions.

1.1.9 Conduct Transfer of Ship Planning Data (A-180)

If Ship Sup's duties/responsibilities are transferring from BFO/S or other Ship Sup individual then conduct turn-over of all planning data, job status, and configuration to newly assigned Ship Sup.

1.1.10 Verify Alteration Maturity (A-180)

Identify to Regional Maintenance and Modernization Coordination Office (RMMCO) all errors in Master list for their correct/verification to support later check in.
Contact RMMCO to check master list status of planned ship alterations (SHIPALTS).

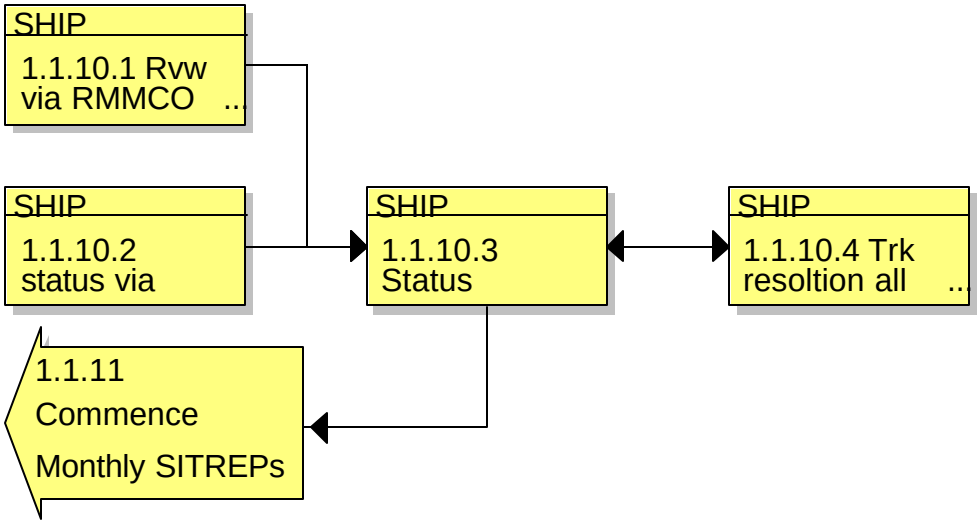

1.1.10.1 Review status via RMMCO Master List

Review status of:
SHIPALT Record (SAR) (should be approved by Ship Program Manager (SPM))
SID (should be approved by PLANNING YARD/SPM)
Integrated Logistics Support (ILS) (certification should be endorsed by SPM)
Equipment Estimated Delivery Date (EDD)
Field change bulletins
Software deliveries

1.1.10.2 Review status via IDB

Review status:
SAR (should be approved by SPM)
SID (should be approved by PLANNING YARD/SPM)
ILS (certification should be endorsed by SPM)
Test Plans
Funding (not critical at this point)
Equipment EDD
Field change bulletins
Software deliveries

1.1.10.3 Resolve status differences between RMMCO Master List and SPAWAR 04 source data from IDB

Work with appropriate representatives for resolution. Ensure RMMCO is provided with latest correct status.
SAR - SPAWAR 04R3
SID - SPAWAR 04R3
ILS - SPAWAR 04L

Test Plans - NTR
Funding (not critical at this point) - IMO Financial
Equipment EDD - SPAWAR 04R2
Field change bulletins - SPAWAR 04R3
Software deliveries - SPAWAR 04R2

1.1.10.4 Track to resolution, all deficiencies

List Deficiencies in monthly planning SITREP and identify responsible parties.
List deficiencies in production meetings with SPAWAR 04.

1.1.11 Commence Monthly Planning SITREPS

See appendix B

PREPARE FOR WPIC (A-180 TO A-150)

1.1.12 Prep for WPIC

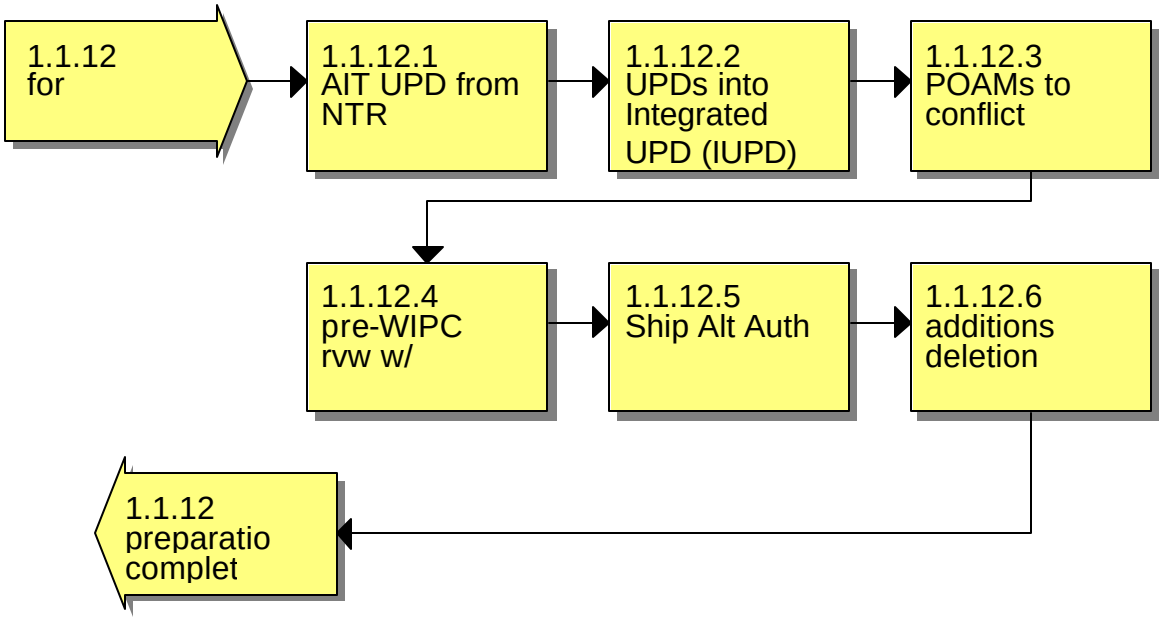

1.1.12.1 Obtain AIT UPD from each NTR with Notional POA&Ms

Obtain AIT Universal Planning Document (UPD) with notional POA&Ms (Appendix C) from each NTR. See appendix J for UPD. These provide the basic information necessary for SUPSHIP to integrate all CNO work and write the specs for what we need the Supervisor of Ships (SUPSHIP)/support facility to provide.

Support services include:
Crane lifts
Lay downs
Rigging
Power
Air
Welding, painting, lagging, gas-free services, fire watches
Shop support
Non-destructive Testing (NDT)
Gases
Forklifts
Packing material
Shipping services
Site access & parking

1.1.12.2 Consolidate UPDs into one integrated IUPD

The Ship Superintendent and QA Manager conduct a Quality Review of the UPD,s and then the Ship Superintendent consolidates the individual UPDs into an integrated version for all installs in a specific availability.

1.1.12.3 Integrate POA&Ms to identify conflicts

1.1.12.4 Conduct pre-WPIC UPD/POA&M review w/NTRs

Review work splits with SUPSHIP if advantageous. It is also important to review how the work should integrate for testing and mutual support issues.

1.1.12.5 Review ship alt auth letter

This NAVSEA letter must include all "K" alterations SPAWAR will be executing.

1.1.12.6 Request additions or deletions

Request from SPAWAR 04R3 additions or deletions as necessary to the Ship Alteration Authorization letter. These additions or deletions will be completed and provided by SPAWAR 04R3 and the ship program manager/Class Desk.

Review Preliminary SID (A-150)

NTR/SMEs are to review Planning Yard (PY) prepared preliminary SIDs/BACDs for system technical accuracy, cost efficient design, and equipment, fabrication or installation requirements beyond program of record intent. This process is coordinated and scheduled by the Design Center. Submarine BACDs are requested from PY via LAR. The LAR should request PY conduct “altdraw” on drawings requested to ensure latest revision is received for review.

1.1.13 SID Review

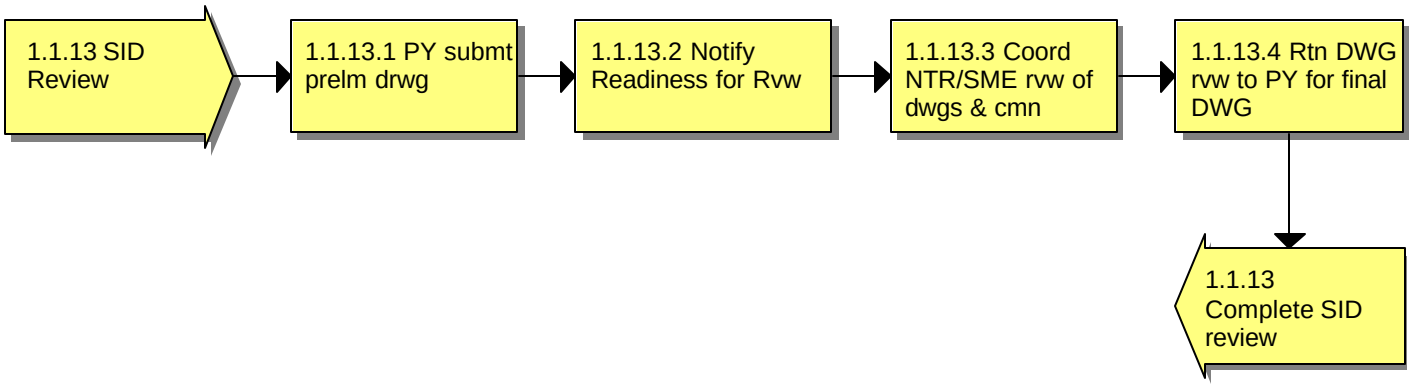

SPAWAR 04R-3 will provide drawings to SSC San Diego no later than A-150 in order to facilitate a two week NTR review period by SSC San Diego before issuing the drawings at
A-120. The purpose of the drawing review is to identify and correct discrepancies before the final drawings are issued.

1) When the planning yard submits preliminary drawings for review, SPAWAR 04R-3 will notify the SSC San Diego Design War Room Manager and enter the drawing review date in the IDB. Hard-copies of the drawings will be maintained in the SPAWAR Design Support Center Reviewing Area, along with a comments log, for 2 weeks. After the 2-week review, the drawings and comment log will be returned to the planning yard for incorporation into the final drawing package. After the 2-week review period, any changes to the drawings shall be made using the LAR process.
2) Upon notification by SPAWAR 04R-3, the SSC San Diego Design War Room Manager will notify the BFO/S and Ship Sup that the drawings are available for review.
3) The BFO/S and Ship Sup will ensure appropriate reviewers (NTRs, SMEs, ISEA, QA, etc.) review the drawings within the 2-week drawing review period. The reviewers shall provide comments in the comments log and mark-up the drawings as appropriate. Hand-written comments are acceptable. If preferred, the reviewers can provide hard-copies of typed comments. If there are no comments, that must be noted as well. While the drawings are posted in the Design Support Center Review area, additional copies of the drawings can be made available for the reviewers to review anywhere that is most convenient for them. Reviews shall maintain copies of the comments they submit.

The Design War Room Manager shall publish a schedule of upcoming drawings reviews for weekly distribution to IIT Leaders, BFO/Ss and IMO. When the IDB/CETracker is

fully automated, the CETracker will notify appropriate personnel and generate the projected review schedules based on updates to the IDB by SPAWAR 04R-3.

1.1.14 Receive Approved SID (A-120)

Work with SPAWAR 04R-3 to resolve issues with SIDs that are not delivered at A-120.

1.1.15 Attend Work Planning Integration Conference (WPIC) (A-120)

The WPIC is scheduled and hosted by the Regional Maintenance Center (RMC). The intent of the conference is for the Naval Supervising Agent (NSA) to determine all the work planned for the CNO availability and deconflict schedules and determine support requirements that they will be responsible to provide.
It is important to provide our:
Integrated Universal Planning Document (IUPD): (see appendix J)
- Scope: Notional Schedule; Location of Work; Special Requirements
- References
- Requirements: Services; Storage; Man-days; Facilities; Conditions/Climate Control
- Additional Notes

and the integrated installation POA&M (**see Gantt Chart POA&M in appendix C**). We also need to provide copies of SIDs for any installation work we want the NSA to accomplish (i.e., it may be desired for the NSA to provide all welding associated with the installation)
Submarine specificity: draft MOA—a SUBPAC requirement—should be delivered to TYCOM Representative at this meeting; MOA review cycle is 14 days.

1.1.16 Receive/Verify/Respond to Industrial Program Manager (IPM) AIT ID E-mail (A-115)

The IPM AIT identification email will list all IIT system installations identified at the WPIC and special concerns. Verify from notes taken at WPIC and respond with concurrence or corrections. This may not occur concerning submarines.

1.1.17 Review IPM Tasking Message (A-105)

This message from the IPM tasks individuals to attend the monthly advance planning meetings to commence at A-90 and will contain action items from WPIC or the advance planning meetings. This may not occur concerning submarines.

1.1.18 Receive IPM Estimate (A-105)

This estimate comes from the Industrial Program Manager (IPM) for support services and install tasking identified at the WPIC and in the IUPD.

1.1.19 Review Current SHIPALT Authorization Letter (A-105)

This authorization letter should include all planned alterations for the alts authorized in the CNO availability. If it does not, then coordinate the correction to this letter through the SPAWAR 04R3 class desk.

1.1.20 Provide Approved Drawings (A-100)

These approved drawings are provided to IPM for any installation work tasked to them.

1.2 PRE-INSTALLATION PROCESS

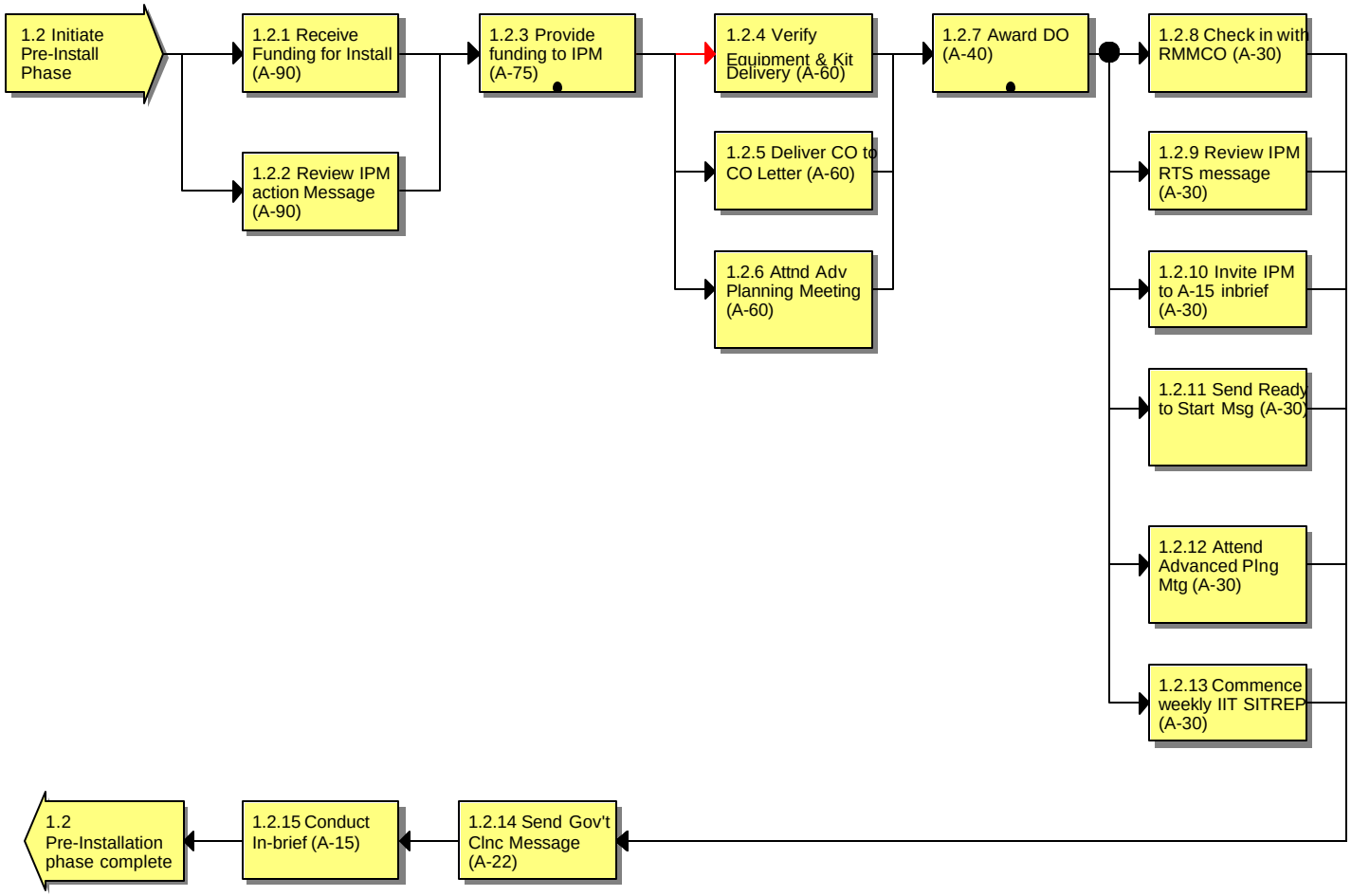

1.2 INITIATE PRE-INSTALL PHASE

1.2.1 Receive Funding for Install (A-90)

All installations tasked and planned for the availability should have funding allocated.
E-mail should have been received from the IMO identifying Job Order Numbers (JON) and amounts allocated. This is verified by checking the DIFMS plan, or checking allocation funding via a CETracker report.
If funding is not allocated, contact financial group in the IMO.

1.2.2 Review IPM Action Message (A-90)

In preparation for the Advanced Planning Meeting, the Ship Superintendent must review messages issued by Industrial Program Manager (IPM) for IIT action items.

1.2.3 Provide Funding to IPM (A-75)

The funding is provided for support services and for tasked installation work. Submarine specificity: before release of funding, ensure MOA is signed (executed) by IPM.

1.2.3 IPM Funding Process

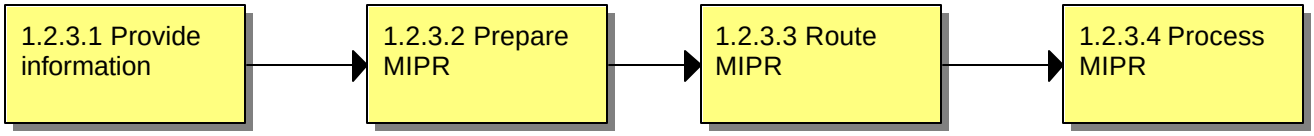

1.2.3.1 Provide information

The Ship Superintendent must provide the IIT Lead Financial Administration Officer with JON, definition of work and amount. (At this point, all Delivery Orders for LLTM should be issued.)

1.2.3.2 Prepare Outgoing Funding Document (OFD)

IIT lead financial personnel are to prepare appropriate OFD to send funding to organization identified by Ship Sup in the amount specified. If the OFD involves more than one system, the JON is determined by ending the ship's Customer Order Number (CON) with the numerals "05". (Ensure amounts on the OFD are within limits of the system plan in DIFMS)

If the OFD involves only one system, the JON for the specific hull/system is used. See **appendix H** on afloat funding procedures for further detail.

1.2.3.3 Route OFD

OFD must be routed via IIT Lead and IMO service center Manager.
It must be identified to the Service Center Manager the apportionment of budget by system and if other funding actions are pending to complete the installation effort for each system.

1.2.3.4 Process OFD

Return the chopped and approved OFD to the IIT financial personnel for processing.

1.2.4 Verify Equipment and Kit Delivery (A-60)

Future year equipment is to be delivered by A-60, but for FY-01 installations the milestone is A-30.

The Ship Superintendent is to contact NTRs and verify equipment has been delivered; if not, identify in IIT planning SITREP and engage SPAWAR 04R2 representative for resolution.

1.2.5 Deliver CO to CO Letter (A-60)

This is dependent on the ship returning from deployment.

The Letter as specified in **appendix F** is to be delivered to each ship CO early in the process, preferably when the Ship Superintendent is first assigned. It is a CO to CO letter that has been written by the SSC San Diego Commanding Officer and is to be issued without alteration. The areas for specific information to the particular ship have been highlighted for your ease of use in the enclosed sample letter. Likewise, the questionnaire (enclosure to the letter) and route sheet for the letter are to be used without alteration. This letter will be prepared by each IIT lead's administrative assistant and hand-delivered to the ship's CO by the Ship Superintendent.

1.2.6 Attend Advanced Planning Meeting (A-60)

At the Advanced Planning Meeting, the Ship Superintendent is to provide latest updated/detailed POA&M to IPM and ship.

1.2.7 Award DO (A-40)

1.2.7 Award DO Process

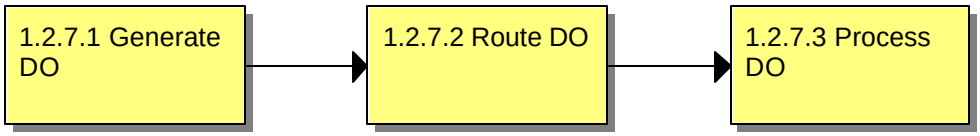

1.2.7.1 Generate DO

The NTR or Ship Superintendent in concert with the QA Manager will originate the delivery order in accordance with applicable SSC San Diego Instructions.

Refer to **appendix I** (to be developed) SOW/DO development/preparation.

If the DO involves more than one system, the JON is determined by ending the ships CON with the numerals "04". (Ensure amounts on DO are within limits of the system plan in DIFMS) If the DO involves only one system the JON for the specific hull/system is used. See **appendix H** on afloat funding procedures for further detail.

1.2.7.2 Route DO

Route DO via
NTR /Ship Sup/QA
COR
IIT Financial Administrator
Service Center Manager (Provide identification of all systems involved and apportionment of awarded funds by system. Also identify by system if this tasking will complete the installation effort.)
IIT Lead
For DO over $500K route to D60 for approval

1.2.7.3 Process DO

Return DO to IIT COR for processing.

1.2.8 Check in with RMMCO (A-30)

The Ship Superintendent is to follow RMMCO instruction (SWRMINST 4790.3) enclosure (10) for check in and fill out enclosure (12) for each alteration.

1.2.9 Review IPM Readiness To Start message (A-30)

Resolve issues between IIT message and IPM message.

1.2.10 Invite IPM to A-15 In-Brief (A-30)

1.2.11 Send Ready to Start Message (A-30)

Appendix D is provided as the template for the Ship Installation Plan message. This message is to be released for each ship at least once in the Inter-Deployment Training Cycle (IDTC) at least 4 weeks before the first SPAWAR Installation start. The message is to be staffed with the ship and released by the IIT lead. This message requests TYCOM permission to conduct installations and should be the vehicle to gain install authorization instead of the individual waiver request. This message template may be modified to fit specific circumstances and may be issued to update significant changes to the SPAWAR plan.

1.2.12 Attend Advanced Planning Meeting (A-30)

Provide contractor production schedule/integrated installation plan if available; otherwise, provide latest/updated POA&M and Integrated Universal Planning Document (IUPD).

1.2.13 Commence Weekly IIT SITREP (A-30)

Refer to IIT SITREP in **appendix B**.

1.2.14 Send Government Clearance Message (A-22)

Refer to template in **appendix G**.

1.2.15 Conduct In-Brief (A-15)

Appendix E is the in brief template. In briefs at a minimum must contain the information specifically called for in the NSTS instruction 9090.310C. The information specified for the installations, especially the capabilities and limitations and requirements for ship's force to support the installation, is to be included. This in brief presentation is to be given 1 to 2 weeks before the start of the first SPAWAR installation in the IDTC. The brief is to be scheduled at a time when the CO can attend, or the issue must be brought to the attention of the SSC San Diego CO. A copy of the brief is to be left with the CO, CSO, and EMO. Please note that a top-level integrated MS Project POA&M is to be provided that details each installation's milestones and key phases as supplied by the NTRs/SMEs and integrated by the Ship Superintendent. The key areas of coverage for the in brief are:

a. Overall Team POCs (JTG SUP, Ship SUP, Prime contractor) and system POCs (NTR/SME contractors)

b. Overview of install phases

c. Ship support required (e.g., satellite air time for SOVT, ordering crypto, support for training and LAN cutover, general space access, etc.) as identified in the Integrated Universal Planning Document

d. Review of training requirements for ship (IBFT briefed) and schedule

e. Plan for integrated ILS delivery

f. Discussion of end-to-end verification testing and time frame.

g. Capabilities and limitations, specific impact items (e.g., mast work, CMS vault access, power outage requirements, LAN cutover date, and process, etc.), POA&M specific to system.

Note: It is best if PICO is concluded before In-Brief.

1.2 PRE-INSTALLATION PHASE COMPLETE.

APPENDIX A
SHIPCHECK PROCESS

From an execution point of view, the planning yards are responsible for scheduling shipchecks. But from a CNSP point of view, SSC San Diego is responsible for scheduling them (CNSP definition of scheduling = obtaining CNSP approval through the CNSP scheduling process). Cases have occurred where the planning yards are gearing up for shipchecks, but CNSP has not granted SSC San Diego permission to do them.

The process for scheduling shipchecks for surface ships:

1) The planning yards determine the dates for shipchecks. These dates are passed on to the BFOs, BFSs, and Ship Superintendents, and are incorporated into the SPAWAR 04R-3 class desk tables and the IDB.

2) The PACFLT scheduler submits the dates to our scheduler so he/she can schedule them at the quarterly scheduling conferences.

3) In cases where we have missed the scheduling conferences, the BFO/BFS must send the appropriate "exception" messages to CNSP requesting permission to conduct shipchecks. These messages should be sent at least 2 weeks before the shipchecks are planned to start.

4) The NTR visit clearance request messages will cite the appropriate CNSP quarterly scheduling conference messages (or messages granting approval through the exception process) as the approval to conduct the shipchecks.

Bottom line: shipcheck teams are not allowed onboard the ships without specific approval from CNSP via Naval message. To ensure that we don't get held up on shipchecks, the planning yards and BFOs/BFSs must work together to make sure all the appropriate Naval messages have been sent and received.

The process for scheduling shipcheck for submarines:

1) At the quarterly scheduling conference all dates for installations and shipchecks are provided by the TYCOM/NSSC/SUBMET SW representatives. These dates unless modified later will be the shipcheck dates for all upcoming installations.

2) The Ship Superintendent will draft the Pre-Installation message based on the results of the scheduling conference. This message will include the dates of the shipcheck/PICO, overview of installations scheduled and ship/IMF requirements (masts raised, sail staging, etc.) This message will also provide the date of the In-Brief (normally held at the end of the shipcheck/PICO period.)

3) The Ship Superintendent is responsible for ensuring that a valid clearance message exists or is sent for the team at least 96 hours before beginning of shipcheck/PICO.

4) The Ship Superintendent is responsible for ensuring that the local RMMCO receives a courtesy copy of all applicable correspondence/message traffic.

APPENDIX B
WEEKLY/MONTHLY PLANNING SITREP

The Monthly/Weekly IIT SITREP provided by the Ship Sup is designed to be a communication to ALCON from the CO's personal representative, the Ship Superintendent. No management review or editing of this e-mail report is to occur before the fact of sending. The SITREP is sent monthly from A-180 and shifts to weekly at the A-30 point. This shift can occur sooner if necessary and may move back and forth if there is more than one installation availability for SPAWAR during the IDTC.

The format provided in the example below is to be followed specifically. The bolded text is to be used in the order specified and verbatim. Some categories of expansion discussion may be left out in their entirety if the color code at the beginning is Green... otherwise, they must be included with discussion comments. The final section on CO comments must be solicited from the ship's CO and only the CO. This ties in with the requirement for the Ship SUP to visit the ship CO daily during execution. If the ship is not in port, or if for other reasons during the planning phase, the CO has no comment, please indicate "none".

The minimal addees for this SITREP are maintained by the Installation Management Office. The intent is to include all parties at high levels who are action or party to making the action happen to provide the Fleet with an efficient quality installation. SITREPs are not to be distributed to superiors of the customer ship/submarine.

E-mail format requirements are as follows. Font: Arial (Western), pitch 10. All titles, sections, subsections, and categories are to be CAPITALIZED; inserted text should reflect applicable upper and lower case letters, except for ships' names, which are always in CAPs. No bullets should be used; topic categories at top and bottom are numbered. No bold highlighting is required, and all words should be in black and white text, even color words (RED, YELLOW, GREEN). (Any bold text in the template herein is used purely to identify the basic template vs. example text.)

E-mail heading.
To (from standard *[To]* SITREP POC Distribution List provided by IMO)
Cc (from standard *[Cc]* SITREP POC Distribution List provided by IMO)
Bc (include all other BFOs, BFSs, Ship Sups and IIT members to improve corporate experiences, lessons learned, and technical articulation.)
Subject: WEEKLY (or MONTHLY as appropriate) IIT SITREP USS GERMANTOWN (LSD-42) 15 DEC 2000

E-mail body.
SPAWAR SYSTEMS CENTER, SAN DIEGO (SSC)
INTEGRATED INSTALLATION TEAM (IIT)

WEEKLY IIT SITREP FOR USS GERMANTOWN (LSD-42)
15 DEC 2000

SHIP LOCATION: 32nd St Naval Station, San Diego, CA
Also include Shipyard if at shipyard

IIT INSTALLATION PERIOD: 01 Nov 00 through 31 Jan 01

SHIP SUPERINTENDENT: John Hoxsie

OVERALL IIT ASSESSMENT: Yellow

SKED: Green
FUNDING: Green
DRAWING PKG: Green
CONTRACTS: Green
EDD/MATERIAL: Yellow
IIT EXECUTION: Green
LOGISTICS PACKAGE, INCLUDING TRAINING AND DOCUMENTATION: Green
CO/CREW CUSTOMER SATISFACTION: Green

Color-coded ratings
Green = High level of confidence, no major issues.
Yellow = Some concerns or some reservations that the installation is in danger or delay.
Red = No confidence in completion on time without exceptional action, will definitely delay installation completion.

INSTALLATIONS:
IT-21 100MBPS LAN & MCSU S/A 1250K
CONTRACTOR: San Denshi Kogyo Co.

SKED:	Planned	Revised	Actual
START DATE:	08 Nov 00	13 Nov 00	15 Nov 00
COMP DATE:	31 Jan 01		

HVAC MODS (associated with ISNS LAN) AER 27/99
CONTRACTOR: SRF Sasebo

SKED:	Planned	Revised	Actual
START DATE:	27 Nov 00	15 Dec 00	
COMP DATE:	31 Jan 01		

INMARSAT B DUAL (second system) S/A 1281K
CONTRACTOR: San Denshi Kogyo Co.

SKED:	Planned	Revised	Actual
START DATE:	18 Nov 00		18 Nov 00
COMP DATE:	31 Jan 01		

1. SKED

a. No issues to report.

2. FUNDING

a. No issues to report.

3. DRAWING PKG

a. No issues to report.

4. CONTRACTS

a. No issues to report.

5. EDD/MATERIAL

a. AER 27/99 HVAC UPGRADE: Fan Coil Units have an EDD of 08 Jan 01. The MATERIAL Assessment Level will remain YELLOW until the Fan Coil Units are received on site.

b. IT-21 100 MBPS & MCSU: COMNAVSURFPAC Msg 122356Z Dec 00 indicates COMSPAWARSYSCOM PMW-158 will purchase 44 new computers for installation on USS GERMANTOWN; EDD of new computers has not been confirmed as of 15 Dec 00.

6. IIT EXECUTION

a. IT-21 100MBPS & MCSU, Cable Installation: Fiber is 100%; CAT5 is 95%, Power is 100%. Foundation installation for Switches and Racks is 90%. 35% of Drop Boxes installed.

b. DWTS: Installation is 85% complete.

c. INMARSAT B DUAL: No progress this week; all efforts of the contractor have been focused on the IT-21 Installation. No adverse effect; INMARSAT Installation will be completed by scheduled date.

d. Work Plan Changes: None to report.

7. LOGISTICS PACKAGE, INCLUDING TRAINING AND DOCUMENTATION

a. No issues to report.

8. CO/CREW CUSTOMER SATISFACTION

a. No issues to report

APPENDIX C
GENERIC INSTALL GANTT CHART POA&M

Generic Installation Gantt Chart POA&M

INSTALLATION PERIOD: MARCH TO AUGUST

ID	Task Name
1	**Pre-Installation**
2	Start Weekly SITREPs
3	Develop I-SOVT
4	Integrated I-Plan from IA
5	Kits Packaged on site
6	Support Svc's Arranged
7	MOA's, support arranged
8	Send Readress to Start Msg
9	POA&M developed
10	Installation In-Brief / CO to CO Letter
11	Keymat Order / Delivered
12	Ship Check with Contractors
13	**Installation (Visit CO Daily)**
14	Start
15	All Cable Delivered
16	Stage the Mast
17	Cable Installed / AJ Racks
18	Cable Connectorization
19	Foundations Installed
20	HVAC Mods
21	Power Run
22	Land Equipment
23	Destage the Mast
24	Land Antenna
25	Equipment Hook-up
26	Equipment Light Off
27	LAN CUTOVER (Class/Unslass)
28	Software Loads
29	Load Workstations
30	**Post Installation**
31	SATCOM Access arranged
32	Equipment SOVT
33	System SOVT
34	OJT / Formal Training
35	C4ISR System Execptance (SOVT Signed)

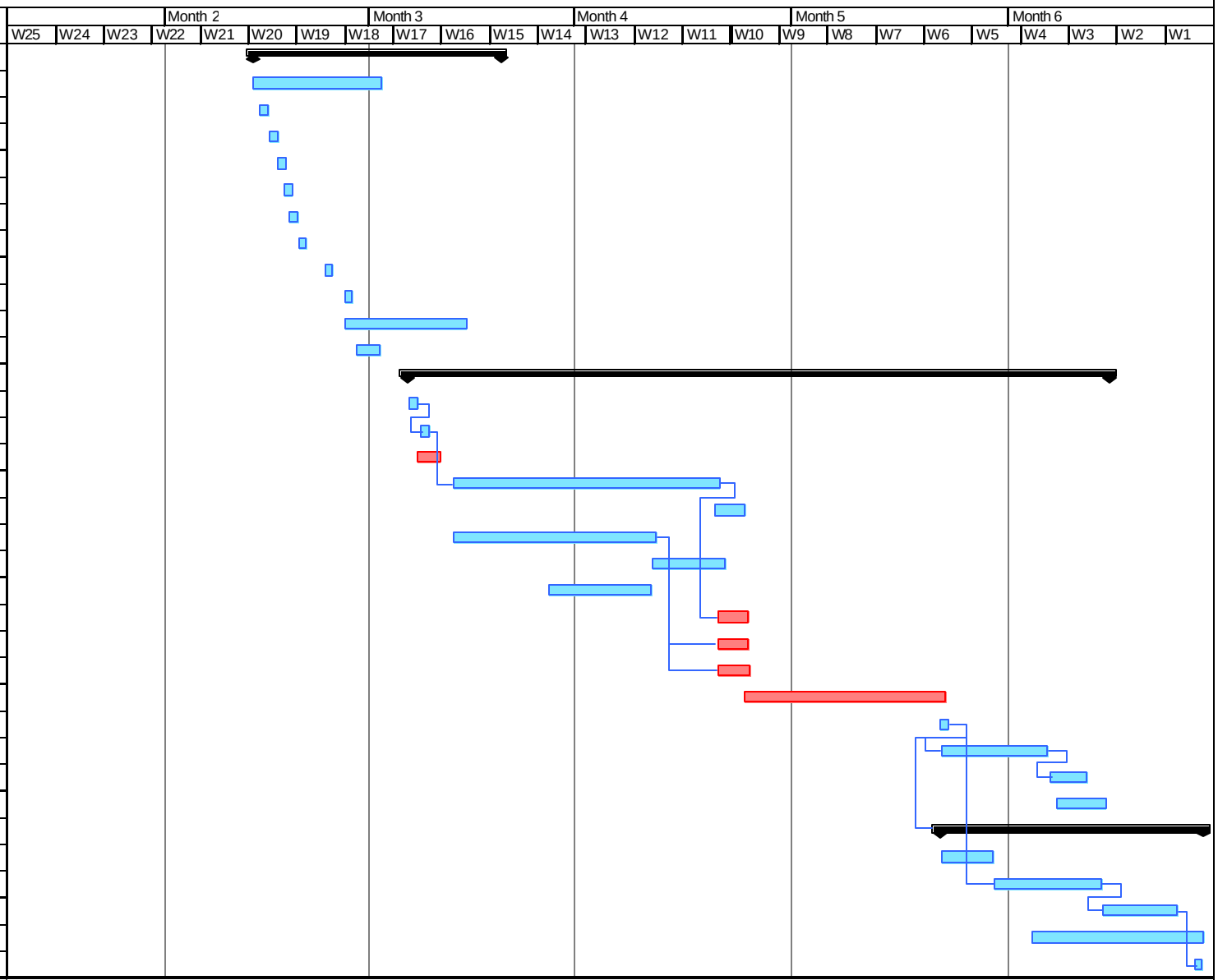

Project I-Install POA&M
Date: Thu 11/16/00

Task | Split | Progress | Milestone | Summary | Rolled Up Task | Rolled Up Split | Rolled Up Milestone | Rolled Up Progress | External Tasks | Project Summary

APPENDIX D
SHIP INSTALLATION PLAN MESSAGE

RTTUZYUW RUWFOAA0062 0692014-UUUU-RHMCSUU.
ZNR UUUUU
R DDHHMMZ MMM YY ZYB
FM SPAWARSYSCEN SAN DIEGO CA//D6X/D60F/D60C// *(use IIT Division for "X")*
or SPAWARSYSACT PAC PEARL HARBOR HI//D91//
or SPAWARSYSACT PAC YOKOSUKA JA//D92//
TO APPROPRIATE TYCOM
SHIP
INFO APPROPRIATE ISIC
COMNAVSEASYSCOM WASHINGTON DC//07/071/911/931//
SUPSHIP SAN DIEGO CA//100/600// *(if in CNO Avail in SD area)*
NAVSHIPYD AND IMF PEARL HARBOR HI//270/271// *(if in CNO Avail in HI area)*
COMNAVSURFGRU PACNORWEST//N43/N6// *(if in the PACNW)*
COMNAVSURFGRU MIDPAC//N4/N44/N6// *(in in the HI area)*
APPROPRIATE PEO
APPROPRIATE PLANNING YARD
SOUTHWEST RMC SAN DIEGO CA//40/41/42//
SIMA SAN DIEGO CA//3000//
COMSPAWARSYSCOM SAN DIEGO CA//04F//
SPAWARSYSCEN SAN DIEGO CA//D6X/D60F/D60F// *(if sent by D90)*

BT

UNCLAS //N04710//
MSGID/GENADMIN/SPAWARSYSCEN SAN DIEGO CA//
SUBJ/SHIP INSTALLATION PLAN//
REF/A/TELCON/SSC-SD/DDMMMYY//

AMPN/REF A IS BTWN SSCSD (NAME) AND USS SHIP (NAME) DISCUSSING INBRIEF DATE.//
POC/BFO/RANK/BFO DIVSION/PRIPHN DSN XXX-XXXX/-/TEL:SECPHN (XXX)XXX-XXXX//
RMKS/ 1. THE FOLLOWING IS A LIST OF SHIPALTS PLANNED FOR SHIP WITH SHIPALT RECORD (SAR) STATUS, INTEGRATED LOGISTICS SUPPORT (ILS) CERTIFICATION STATUS, EQUIPMENT DELIVERY DATE (EDD), SHIP INSTALLATION DRAWING (SID) STATUS, SHIP PROGRAM MANAGER (SPM) APPROVAL STATUS, AND INSTALLATION INCLUSIVE DATES. ALL SPAWARSYSCOM INSTALLATIONS WILL BE COORDINATED BY THE SSC-SD SHIP SUPERINTENDENT. RISK FACTORS INDICATE THE FOLLOWING:
-LOW: CLEAR PATH TO SUCCESSFUL ON TIME COMPLETION ANTICIPATED.
-MEDIUM: POTENTIAL EXISTS FOR ISSUES THAT MAY PREVENT SUCCESSFUL ON TIME COMPLETION.
-HIGH: SIGNIFICANT POTENTIAL EXISTS FOR ISSUES THAT MAY PREVENT SUCCESSFUL ON TIME COMPLETION.
A. SHIPALT: _____
SAR STATUS: (ex.: NAVSEA APPROVED; AWAITING NAVSEA APPROVAL; SPAWAR APPROVED…)
ILS CERTIFICATION STATUS: (ex.: NAVSEA APPROVED; AWAITING NAVSEA APPROVAL; SPAWAR APPROVED…)
EDD: MM/DD/YY

SID STATUS: (ex.: EDD FROM xxxPY MM/DD/YY; SPM APPROVED MM/DD/YY; AWAITING SPM APPROVAL OF PY FINAL DWGS…)
SPM APPROVAL STATUS: (ex.: AWTG SPM APPROVAL; SPM APPROVED; SPM APPROVAL PENDING DELIVERY OF PY APPROVED SID…)
INSTALL DATES: MM/DD/YY - MM/DD/YY
RISK: INDICATE HI, MEDIUM OR LOW
COMMENTS: *(IF NECESSARY FOR RISK LEVEL)*

2. ALL NEW INSTALLS WILL REQUIRE SOME CS TO BE FUNCTIONAL DURING SOVT.

3. REQUEST TYCOM AUTHORIZATION TO CONDUCT INSTALLATIONS IAW PLAN DETAILED ABOVE. UNODIR INBRIEF WILL BE HELD ONBOARD USS SHIP ON DD MMM YY (REF A REFERS**).**

4. BATTLE FORCE OFFICER FOR GROUP IS BFO NAME, PHONE XXX-XXX-XXXX, EMAIL BFO EMAIL AT SPAWAR.NAVY.MIL. SHIP SUPERINTENDENT FOR SHIP IS SHIP SUP NAME, PHONE XXX-XXX-XXXX, EMAIL SHIP SUP EMAIL AT SPAWAR.NAVY.MIL.//
BT
#0062

NNNN

APPENDIX E
IN-BRIEF TEMPLATE

The following pages are an example of the standard In-Brief to be presented to the Ship's Commanding Officer and other key players. If the CO is not going to attend this In-Brief, this issue must be discussed with your IIT Lead in light of our Command policy that this is the minimum formal presentation of the installation work package that the ship CO will need to be informed of our requirements and coordination necessary with the ship. We are also providing the minimum 'capabilities and limitations' of the systems we are installing.

The information specified for the installations, especially the capabilities and limitations and requirements for ship's force to support the installation, is to be included. This In-Brief presentation is to be given 1 to 2 weeks before the start of the first SPAWAR installation in the IDTC. A CD ROM of the brief is to be left with the CO, CSO, and EMO. Please note that a top-level integrated MS Project POA&M (see Appendix C) is to be provided that details each installation's milestones and key phases as supplied by the NTRs/SMEs and integrated by the Ship Superintendent. The key areas of coverage for the In-Brief are:

a. Overall Team POCs (IIT BFS/O, Ship SUP, Prime contractor) and system POCs (NTR/SME, contractors)
b. Overview of install phases
c. Ship support required (e.g., satellite air time for SOVT, ordering crypto, support for training and LAN cutover, general space access, etc.)
d. Review of training requirements for ship (IBFT briefed) and schedule
e. Plan for integrated integrated logistic support (ILS) delivery
f. Discussion of end-to-end verification testing and time frame.
g. Each system should cover capabilities and limitations, specific impact items (e.g., mast work, CMS vault access, power outage requirements, LAN cutover date and process, etc.), POA&M specific to system.

SHIPBOARD IN-BRIEF

Replace Italics with actual specifics / comments

Picture of Subject Ship

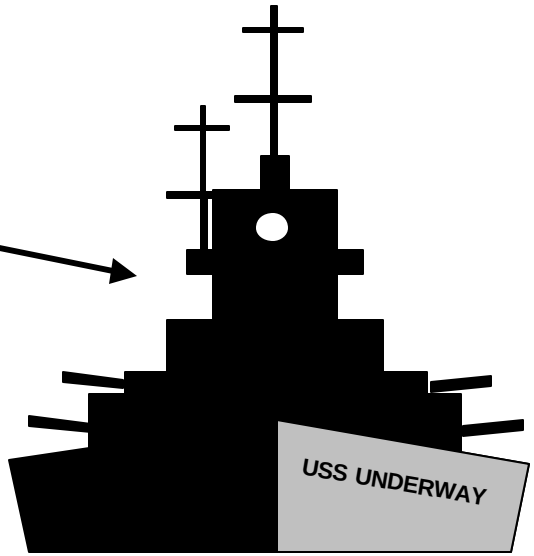

List of Systems

TV-DTS
NEXT SYSTEM
NEXT SYSTEM
ETC.

USS *UNDERWAY* SHIPBOARD IN-BRIEF
C4ISR SPAWAR SYSTEMS CENTER

Presented By: ***C4ISR Representative***
Date: ***Month Day Year***

Overview

Replace Italics with actual specifics / comments

- **Integrated Installation Team Structure for USS *Shipname* Installations**
- **Installation Process Initiatives**
  - **Integrated Teams**
  - **Training (IBFT)**
  - **Contracting**
  - **Fleet Interface (Weekly SITREP and CO to CO letter)**
- **Top-Level POA&M for USS *Shipname* Installations**
- **Ship's Force involvement**
- **Planning process and issues status to date**
- **Individual System detail briefing**
  - **Install POA&M**
  - **CAPS/LIMS...**

Organizational Structure for USS *Shipname* Integrated Install Team

Replace Italics with actual specifics / comments

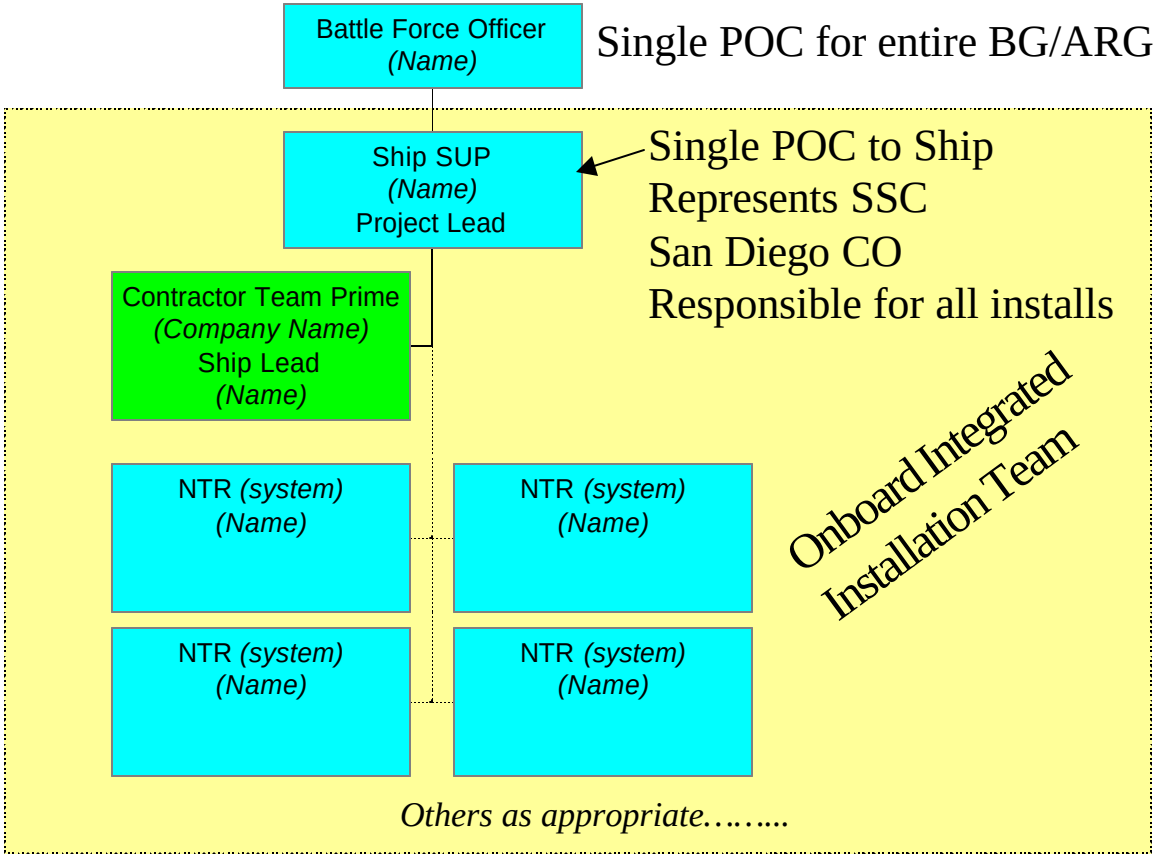

This Team is supported by the design, engineering, ILS, financial, and contract members of the IIT War Room at SSC San Diego and SPAWAR.

INTRODUCTION

Replace Italics with actual specifics / comments

Name	System	Title	Phone #	E-mail
Super Tech	*TV-DTS*	*NTR*	*555-1234*	*NTR@.com*
I Do Care	*Next System*	*Ship Sup*	*555-4321*	*SS@.com*
Call Me First	*Next System*	*Waterfront Manager*	*555-0123*	*WFM@.com*

List of POCs

Points of Contact should include:

Ship Superintendent (SS)

Naval Technical Representatives (NTR)

Subject Matter Experts (SME)

IMO Waterfront Manager

Battle Force Manager at SPAWAR

Contractor Companies and Lead person

If known, the Ship Force POCs should also be included

SSC San Diego Installation and Fleet Support Initiatives

INTEGRATED INSTALLATION TEAM WAR ROOM

IIT War Room provides a common meeting space to work out issues central to the design and installation of C4ISR capabilities.

The Design War Room area is a location to get all players (Planning Yards, System Designers, Installers, and Industry) together in one spot to standardize designs and processes relating to implementation of Integrated System Design.

The BG/ARG War Rooms are situated adjacent to the Design War Room. Installers, ISEAs, PMWs, Ship Sups, NTRs, and Planning Yards…… Plan and Execute SPAWAR Installations.

The concept of the IIT War Room is to tear down the walls that divide the key players and provide a forum for streamlined communication throughout the installation process - from initial R&D through installation and life cycle support.

SPAWAR C4ISR INSTITUTE

Background……..

- SPAWAR Institute Initiative created out of need to solve Fleet Training problems with C4ISR IT systems
- Key Systems
  - LAN connectivity and System Administration
  - INMARSAT
  - ADNS
  - GCCS-M
  - ISNS (IT-21)
- Typical problem areas
  - No End-to-End System Training
  - No Training Provided
  - No Standardized OJT training method
  - Systems fielding and changing faster than school house pipeline can pace

SPAWAR C4ISR INSTITUTE

Training Support Initiatives

- Grey Beard Training
  - **Example: XYLAN, ISNS, GCCS-M, ADNS, INMARSAT, 5KHZ** system experts direct interaction with fleet technicians at SPAWAR Institute
- Train the Trainers
  - **Insertion into existing IBFT courses when available**
  - **Familiarization**
  - **ATG, FTSC, FTC, FCTCPAC**
- System Level Training Completed (Aboard several PACFLT CVN's)
  - **WSC-3, DAMA, OTCIXS, TADIXS, BGIXS, TRE, USC-38, NECC, ADNS, NAVMACS WSC-6, CA III, SHF Baseband, GCCS-M, ISNS, CTAPS, JDISS, XYLAN, ROUTERS/NT**
  - **Team effort ties in End to End verification - Check Out - Training - Metrics Analysis**
  - **Will include Afloat University (SPAWAR Reserves commercial training)**
  - **TYCOM Funded (CNAP strongly endorses as transition training process)**
- Integrated Battle Force Training (IBFT) Website
  - **Identifies and provides quotas for C4ISR training requirements**
  - **SPAWAR Institute provides IBFT training**
  - **URL http://c4iweb.spawar.navy.mil/04/ibft**
  - **IBFT PACFLT Coordinator located at SPAWAR Institute**
    - OS1 Chuck Daniel 619-524-2264

Contact List……

SPAWAR Institute Director	PAC Fleet Rep. / IBFT Coordinator
Fleet Training Liaison	Fleet Training Rep. / IBFT Liaison

Sailor-to-Engineer Connectivity for All Systems In the Battle Group

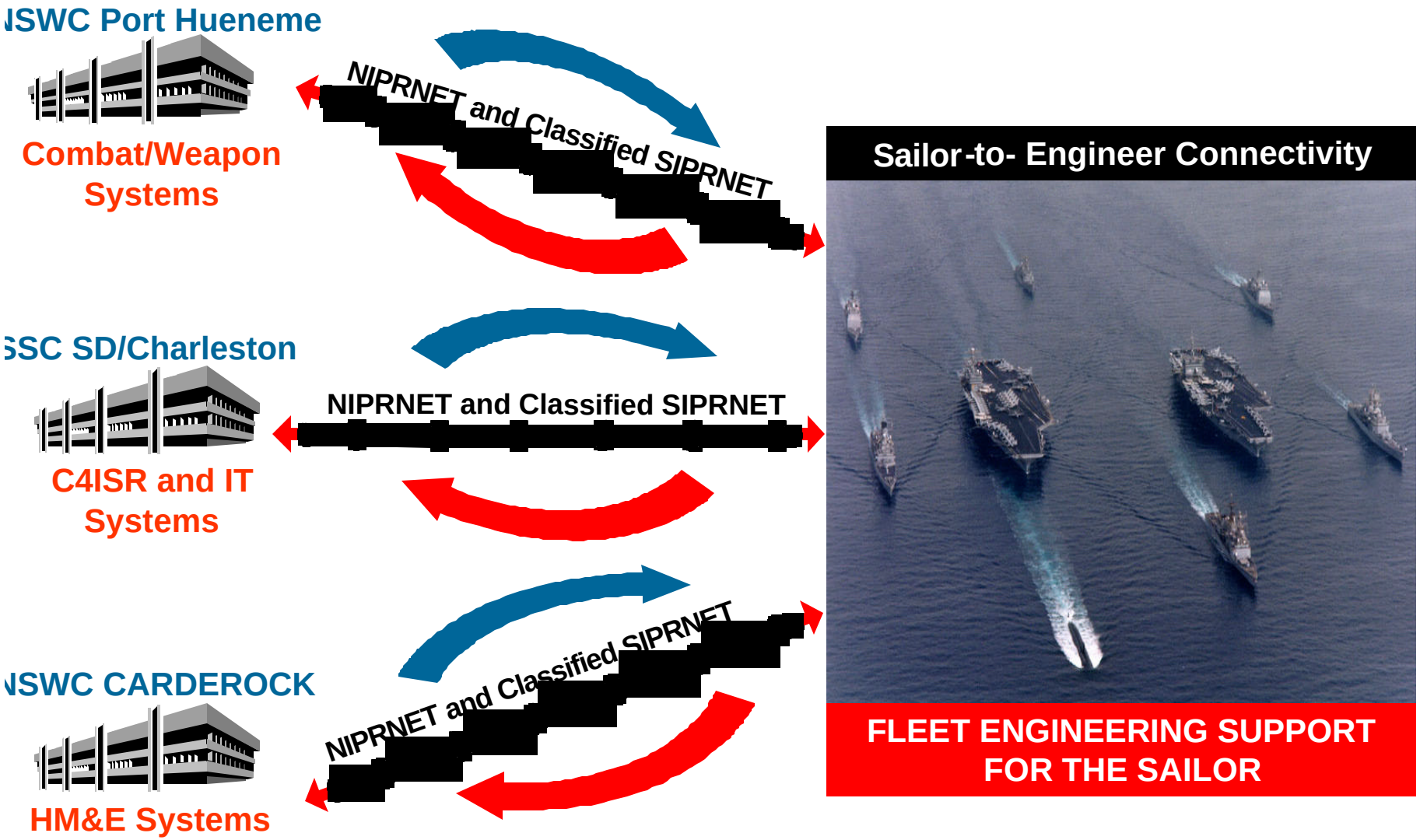

I-2000 Contract Initiative

CONTRACT FEATURES	I-2000	EF&I	OTHERS
Incentivizes Kr for savings	†		
Provides for competition	†		
Provides for integration on installation by Kr	†	†	
Prime coordinator of integration plan vice GOV	†	†	
Provides for onsite rep in design process	†	*	*
Focused on incentivizing kr for integration of mgmt, sked, and info plan	†		
Provides for QA system, required by AIT TECH spec 9090-310C	†	*	

* Some Elements are covered by this contract.

I-2000 Contract is a key element in achieving integration and efficiencies.

Award Fee Plan Goals

- Provide motivation for excellence in contract performance, technical quality, and cost savings
- Criteria:
  - Quality, Products, Services, and Deliverables
  - Schedule
  - Financial Management
  - Personnel Management
- Emphasis on system integration of installations

Weekly SITREP

- Format is e-mail SITREP from the “deckplate” IIT Ship SUP (no other management review prior to sending)
- Alerts all key players in the support community to issues requiring resolution for successful installation
- Sent to Ship CO, SSC San Diego CO, SPAWAR 04 and Staff, SPAWAR Program Manager, Port Engineer, Planning Yard CO, SPM, SUPSHIP CO, Contractors and others as required
- Specific intent not to send from SSC to ship’s Chain of Command, but to be passed at CO’s discretion

SITREP Example (Header)

WEEKLY IIT SITREP USS GERMANTOWN (LSD-42)
15 DEC 2000

SHIP LOCATION: Naval Station (32 Street) San Diego, Pier 13

IIT INSTALLATION PERIOD: 01 Nov 2000 through 31 Jan 2001

SHIP SUPERINTENDENT: John Hoxsie

Overall IIT Assessment: Yellow
SKED: **Yellow**
FUNDING: **Green**
DRAWING PKG: **Yellow**
CONTRACTS: **Green**
EDD/MATERIAL: **Green**
IIT EXECUTION: **Yellow**
LOGISTICS PACKAGE, INCLUDING TRAINING AND DOCUMENTATION: **Green**
CO/CREW CUSTOMER SATISFACTION: **Green**

Color-coded ratings:
Green = High level of confidence, no major issues.
Yellow = Some concerns or some reservations that the installation is in danger or delay.
Red = No confidence in completion on time without exceptional action, will definitely delay installation completion.

SITREP Example (Body Synopsis)

INSTALLATIONS:

IT-21 100MBPS LAN & MCSU S/A 1250K

CONTRACTOR:	San Denshi Kogyo Co.		
SKED:	Planned	Revised	Actual
START DATE:	08 Nov 00	13 Nov 00	15 Nov 00
COMP DATE:	31 Jan 01		

HVAC MODS (associated with ISNS LAN) AER 27/99

CONTRACTOR:	SRF Sasebo		
SKED:	Planned	Revised	Actual
START DATE:	27 Nov 00	15 Dec 00	
COMP DATE:	31 Jan 01		

INMARSAT B DUAL (second system) S/A 1281K

CONTRACTOR:	San Denshi Kogyo Co.		
SKED:	Planned	Revised	Actual
START DATE:	18 Nov 00		01 Nov 00
COMP DATE:	07 Dec 00		20 Nov 00

SITREP Example (Body Synopsis)

1. SKED
a. No issues to report.
2. FUNDING
a. No issues to report.
3. DRAWING PKG
a. No issues to report.
4. CONTRACTS
a. No issues to report.

5. EDD/MATERIAL
a. AER 27/99 HVAC UPGRADE: Fan Coil Units have an EDD of 08 Jan 01. The MATERIAL assessment will remain YELLOW until the Fan Coil Units are received on site.
b. IT-21 100MBPS & MCSU: COMNAVSURFPAC 122356ZDEC00 indicates COMSPAWARSYSCOM PMW-165 will purchase 44 new computers for installation on USS GERMANTOWN; EDD of new computers has not been confirmed as of 15 Dec 00.

6. IIT EXECUTION
a. IT-21 100MBPS & MCSU, Cable Installation: Fiber is 100%; CAT5 is 95%, Power is 100%. Foundation installation for Switches and Racks is 90%. 35% of Drop Boxes installed.

7. LOGISTICS PACKAGE, INCLUDING TRAINING AND DOCUMENTATION
a. No issues to report.

8. CO/CREW CUSTOMER SATISFACTION
a. No issues to report.

SITREP Example (Body Issues)

SKED:

− Potential for Underway requirement in late SEP would impact LAN install. Delay of 2 weeks

FUNDING:

− CORN not approved for ship requested work scope expansion; no extra funds available.

DRAWING PKG:

− Awaiting approved structural Drawings for INMARSAT B

− If approved SIDs not received by 25 Aug, SPM authorization to proceed with structural mark-up required by 28 Aug to avoid impact on install completion.

CONTRACTS:

− No issues to report this SITREP.

EDD/MATERIAL:

− Unavailability of 3 power transformers is being worked by contractor, port engineer and planning yard.

IIT EXECUTION:

− Late Drawings for INMARSAT have delayed the topside work

LOGISTICS PKG, PLUS TRAING & DOCS:

− ILS Certification expected prior to SOVT.

CO/CREW CUSTOMER SATISFACTION

− (Normally, this area is used to convey or quote shipboard comments of satisfaction and/or disatisfaction.)

CO to CO Letter

- **Provided to Ship's CO from SPAWAR Systems Center CO by Ship Superintendent**
  - **Introduces Ship Superintendent**
  - **Solicits Feedback**
  - **Promotes teaming by making Ship Superintendent part of wardroom**
  - **Specifies requirement for Ship Superintendent to brief CO daily during install activity windows**
  - **Starts the dialogue for the IDTC**

Installation Plan

Overall POA&M

Insert High level POA&M of all system major milestones

ID	Task Name
1	**SHF AN/WSC-6(V)7**
2	Rip outs
3	Install
4	SOVT
5	Onboard Training
6	**TSS Tactical Switching Sys**
7	Install
8	SOVT
9	Onboard Training
10	**ADNS**
11	RipOuts
12	Install
13	SOVT
14	Onboard Training
15	**End to End Checkout**
16	SME Checkout
17	Test and Training

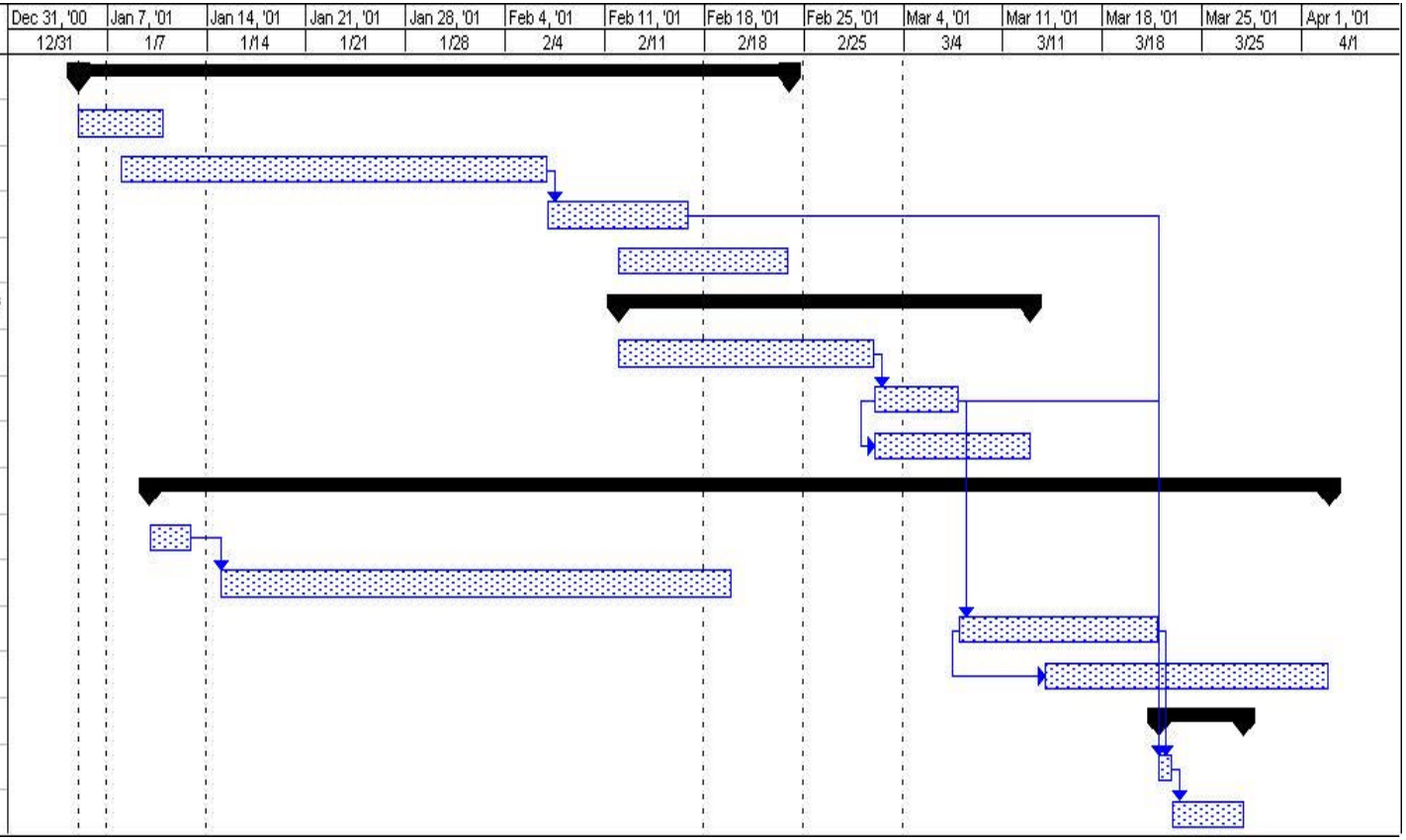

SYSTEM BACKGROUND

Replace Italics with actual specifics / comments

- ***Brief History***
- ***System Lineage***
- ***Improvements over previous system***
- ***Fleet Benefits***
- ***Possible future expectations of system***

SYSTEM CAPABILITIES

- POC
- System Description
- Concept of Operations
- Limitations
- Data Products
- Training
- System Support

SYSTEM CAPABILITIES

Sample using TV-DTS

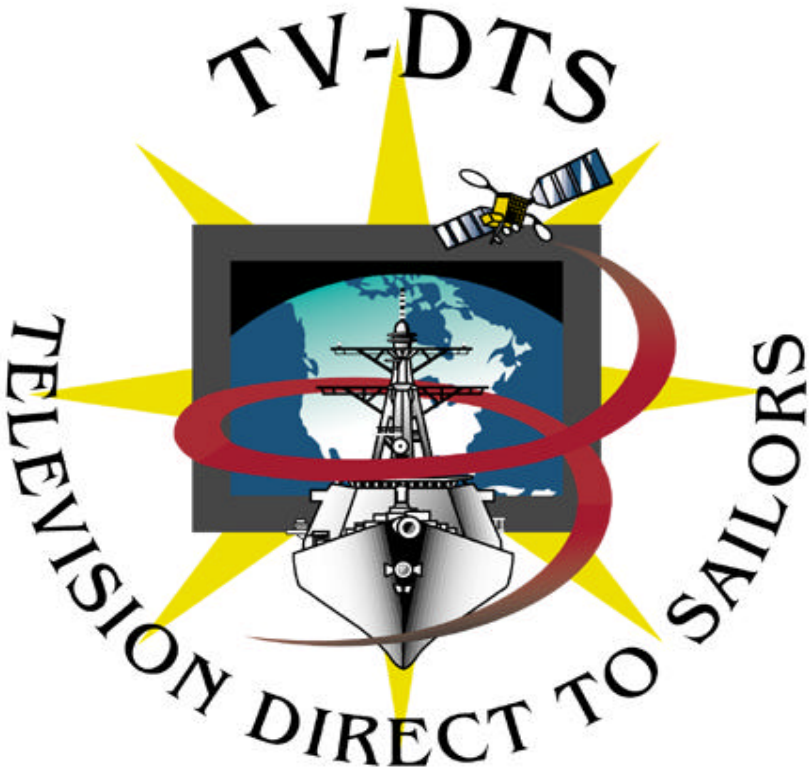

System Capability (Description)

- **TV-DTS is an Initiative to Bring Enhanced Situational Awareness and Quality of Life Programming to Sailors and Marines at Sea… Anytime… Anywhere.**

Sample using TV-DTS

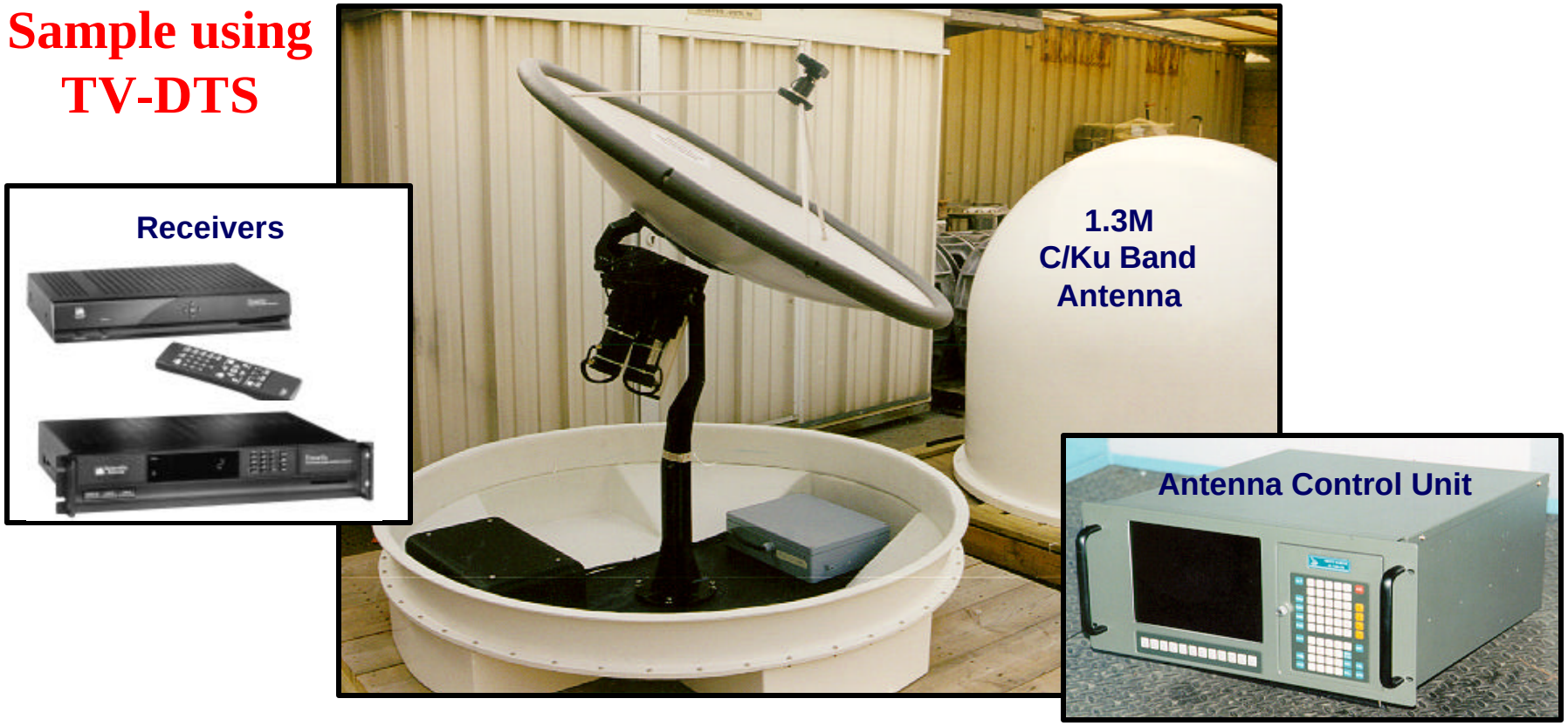

System Capability (Limitations)

Sample using TV-DTS

- **C-Band Electromagnetic Interference**
  - **SPS-49**
  - **SPY-1**
  - **SPS-48E**
- **Physical Blockage**
  - **TV-DTS is Low Priority for Topside Space**
  - **CG & DDG classes have extreme blockage**

INSTALLATION PLAN

Replace Italics with actual specifics / comments

- *Introduce Contractor Leads*
- *Discuss Installation schedule and POA&M*
  - *Tag-out Safety*
  - *Fire Watch Safety*
  - *Installation hours*
  - *Testing requirements / dependencies...*
- *Possible number installation personnel*
  - *Clearance needs*
- *Pier usage*
  - *Vehicle access*
  - *Material storage*
  - *Crane Services*
- *Hull cut requirements, if any*

System Logistic Support

4790CK Requirements

Delivery Schedule for :

- Tech Manuals
- Quick Reference Guides
- Integrated Logistic Support

Sample using TV-DTS

- Point of Contact
  - Help Desk 1-877-477-2927

OE-556/U Antenna Group

PMS Cards Completed: Jan 99

APLs Completed: Feb 99

NAVICP MSD: Dec 99

Minimal Preventive Maintenance

Corrective Maintenance:

- Fault Isolation to LRU
- OBRPs Procured and Delivered with Each System
- Interim Support Provided by ISEA

Document	Reference	Dated	Status
ILS Certification PMS 312	Letter	Dec-98	Approved
ILS Certification PMS 377	Letter	Nov-98	Approved
ILS Certification PMS 400	Letter	Feb-99	Approved

Formal Training / OJT

Sample using
TV-DTS

- Factory Training
  - ATG, Santee, CA
  - ATG, Virginia Beach, VA
  - FTSCs & ISEA Personnel
- Initial Training
  - OJT / OBT During Installation and SOVT
  - ET (E5) and IC (E5 or E6)
- Follow-On Training
  - Integrated Battle Force Training Web Site:
    - http://c4iweb.spawar.navy.mil/04/ibft/
  - FTSC & ISEA OJT as Required
  - OEM Training Video

Note:

Training for Equipment Added to SITE System will be Incorporated into SITE Operator and Maintainer's Course, Ft. Meade, MD

BLOCK DIAGRAM

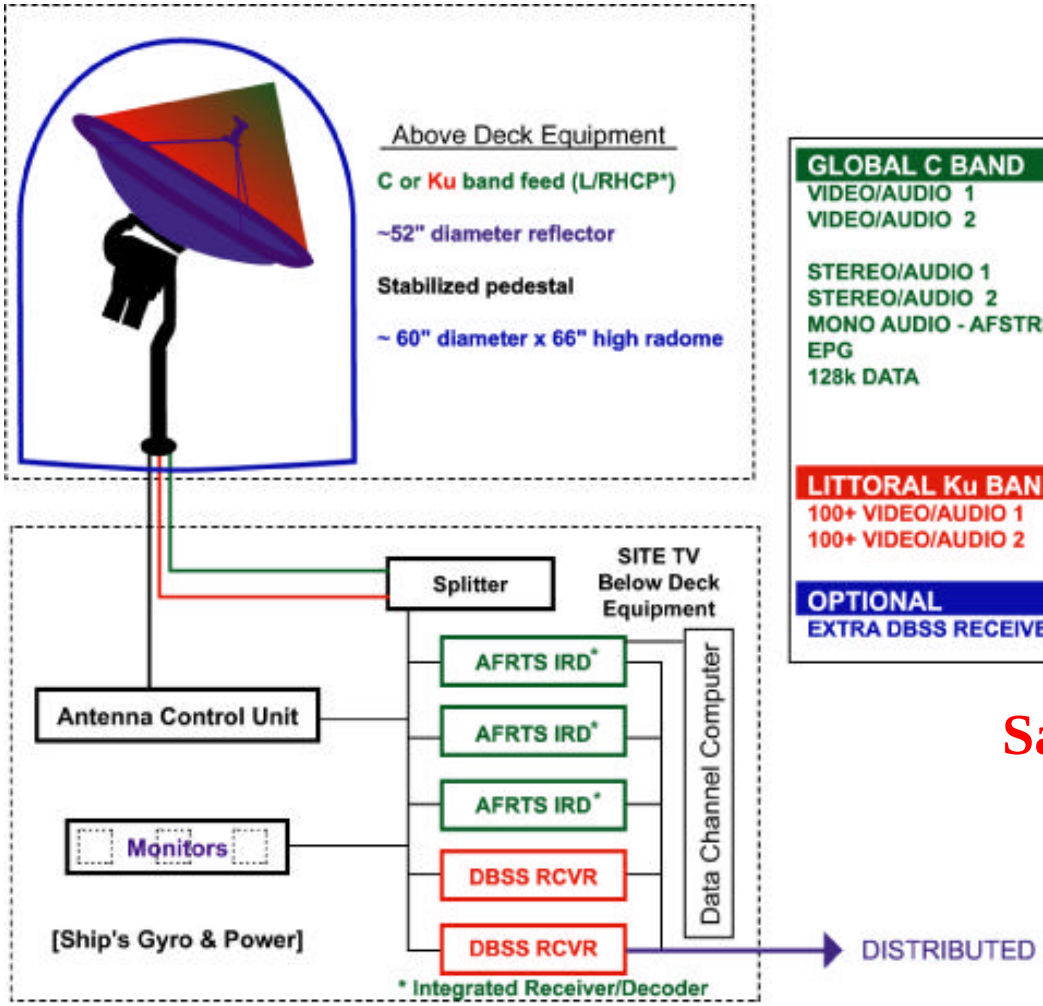

GLOBAL C BAND		Mbps
VIDEO/AUDIO 1	NEWS/SPORTS	1.544
VIDEO/AUDIO 2	ENTERTAINMENT/ SPORTS/NAVY USE	1.544
STEREO/AUDIO 1	RADIO/STEREO	.128
STEREO/AUDIO 2	RADIO/STEREO	128
MONO AUDIO - AFSTRS	VOICE LINE	.064
EPG	PROGRAM GUIDE	.064
128k DATA	PUBLIC AFFAIRS	.128
	TOTAL DATA RATE	3.600

LITTORAL Ku BAND

100+ VIDEO/AUDIO 1
100+ VIDEO/AUDIO 2

OPTIONAL

EXTRA DBSS RECEIVERS

Sample using TV-DTS

SYSTEM BACKGROUND

Replace Italics with actual specifics / comments

- ***Brief History***
- ***System Lineage***
- ***Improvements over previous system***
- ***Fleet Benefits***
- ***Possible future expectations of system***

Next System

Repeat to cover all Installs

APPENDIX F
SHIP CO LETTER

(Insert Date)

CAPT Ted N. Branch
USS CORONADO (AGF-11)
FPO AP 96601XXXXX

Dear Captain Branch:

Space and Naval Warfare Systems Center, San Diego (SSC San Diego) has been tasked to plan and execute a package of C^4ISR installations for USS CORONADO (AGF-11) to provide you with the latest C^4ISR capability prior to your next deployment. Our goal is to provide you and your crew with a totally integrated installation package which includes: planning, design and engineering, production, system operational verification testing, logistics package delivery, on-the-job training for your crew, and most importantly, ensuring that you are completely satisfied with the results.

To conduct these integrated installations, we have formed a strong government/contractor team made up of specialists qualified in shipboard installations, systems engineering, and C^4ISR testing. Mr. Joe Hirschfelder has been assigned as the C^4ISR Ship Superintendent (SHIPSUP) for USS CORONADO. Joe is our single Point of Contact (POC) and project team leader, responsible for all aspects of installation planning and execution. Joe will make routine visits to USS CORONADO to oversee progress and coordinate all government/contractor effort during periods of planning, production, and testing. As we move into the critical production and test phase, I have asked Joe to see you on a daily basis to give you a brief update on progress and key issues. He will also provide weekly written e-mail situation reports, with copies going to key individuals at SPAWAR Headquarters, NAVSEA, and SSC San Diego.

When the actual production effort begins, the government/contractor team will work many long hours aboard USS CORONADO to complete installation and testing, and to bring your C^4ISR systems and crew up to their highest state of readiness. Historically, the best results have been achieved when the SHIPSUP has been incorporated and welcomed into the wardroom. This will enable a closer working relationship between our project team leader and your crew.

Beyond the important work on USS CORONADO, I need your direct feedback to improve the process of planning, engineering, and executing these difficult integrated installation packages. A call from you is always welcome, and I also ask that you take a moment to give me written feedback by filling out the questionnaire attached as enclosure (1). Your feedback on how the installation team performed will be used to strengthen our ship installation and support program. I would appreciate your utmost candor, including your view on whether or not we were successful in meeting our final objective, which is to leave you in the highest state of C^4ISR readiness.

If you need anything beyond the help Joe can provide, please feel free to contact me at (619) 524-2481. Joe can be contacted at (619) 524-2694. The Battle Force Officer POC is Lieutenant Tony Ramos at (619) 524-2412.

Sincerely,

JARRATT M. MOWERY
Captain (Sel), U.S. Navy

Enclosure: SSC San Diego Installation Process Feedback Questionnaire

SSC SAN DIEGO
INSTALLATION PROCESS FEEDBACK QUESTIONNAIRE

Please check ✍ or fill in applicable blocks.

Ship: _____Hull: _____ Date: _____

Overall View of Installation Package		
1.	✍ ✍✍✍✍✍✍✍✍✍✍✍ **Unsat Poor Good Excellent Superb**	Pre-installation Notification/Coordination.
2.	✍ ✍✍✍✍✍✍✍✍✍✍✍ **Unsat Poor Good Excellent Superb**	Site Survey.
3.	✍ ✍✍✍✍✍✍✍✍✍✍✍ **Unsat Poor Good Excellent Superb**	In-Brief.
4.	✍ ✍✍✍✍✍✍✍✍✍✍✍ **Unsat Poor Good Excellent Superb**	Routine Status Reporting.
5.	✍ ✍✍✍✍✍✍✍✍✍✍✍ **Unsat Poor Good Excellent Superb**	Installation (physical aspects).
6.	✍ ✍✍✍✍✍✍✍✍✍✍✍ **Unsat Poor Good Excellent Superb**	Integrated Logistic Support (ILS).
7.	✍ ✍✍✍✍✍✍✍✍✍✍✍ **Unsat Poor Good Excellent Superb**	Training (OJT).
8.	✍ ✍✍✍✍✍✍✍✍✍✍✍ **Unsat Poor Good Excellent Superb**	System Operation Verification Test.
9.	✍ ✍✍✍✍✍✍✍✍✍✍✍ **Unsat Poor Good Excellent Superb**	Standards of Conduct (Government and Contractor)
10.	✍ ✍✍✍✍✍✍✍✍✍✍✍ **Unsat Poor Good Excellent Superb**	Overall Impression of Installation

11. What areas could be improved for future installations?

_____

_____

_____

_____

_____

_____

_____

_____

_____

12. What are your impressions of the government/contractor team that conducted the installation?

_____
_____
_____
_____
_____
_____
_____
_____
_____

13. Our goal was to conduct a fully coordinated and integrated installation. Do you feel we achieved that goal?

_____
_____
_____
_____
_____
_____
_____
_____
_____

14. Commanding Officer's signature:

_____

Mail Feedback Questionnaire to:
CAPT (Sel) Jarratt M. Mowery
Head, Fleet Engineering Department, Code 260
SPAWARSYSCEN
53560 Hull Street
San Diego, CA 92152-5001

STATUS SHEET (EXAMPLE)

SHIP:

CO:

PHONE:

ShipSup:

INSTALLATION SUMMARY:

ROUTE SHEET

ENTER APPROPRIATE CLASSIFICATION

CLASSIFICATION

UNCLASSIFIED

(DOWNGRADE TO UNCLASSIFIED WHEN MATERIAL IS DETACHED)

DATE RECEIVED _____

USE APPROPRIATE CLASSIFIED COVER SHEET

ORIGINATOR	FILE AND SERIAL NO	DATE
CODE 262/263/264		

SUBJECT/DOCUMENT DESCRIPTION
WARNING: DO NOT ENTER CLASSIFIED INFORMATION

SHIPS CO LETTER FOR

CODE	INITIALED		ACTION	REMARKS
	BY	ON DATE		*(Please write on first available line in order to provide space for all who may wish to comment)*
26204 26304 26404			I	
262S 263S 264 S			I	
262 263 264			I	
260S			I	
260			S	
26204 26304 26404			A	

SYMBOLS: A - ACTION C - COMMENT I - INFORMATION P- PREPARE REPLY R - RETAIN COPY S- SIGNATURE

ENTER APPROPRIATE CLASSIFICATION

CLASSIFICATION

UNCLASSIFIED

(DOWNGRADE TO UNCLASSIFIED WHEN MATERIAL IS DETACHED)

USE APPROPRIATE COVER SHEET WHEN ATTTACHED MATERIAL IS CLASSIFIED

APPENDIX G
GOVERNMENT CLEARANCE MESSAGE

(EASTPAC example)
R DDHHMMZ MMM YY ZYB
ZNR UUUUU
FM SPAWARSYSCEN SAN DIEGO CA//D6X/D60F/D60C/D62/D63/D64// *("X" = IIT Division)*
or SPAWARSYSACT PAC PEARL HARBOR HI//D91//
or SPAWARSYSFAC PAC YOKOSUKA JA//D92//
TO USS SHIP
INFO CINCPACFLT PEARL HARBOR HI//N6/N43/N431//
Appropriate TYCOM
COMNAVAIRPAC SAN DIEGO CA//N43/N436/N432// if ship is a CV/CVN
COMNAVSURFPAC SAN DIEGO CA//N6/N62/N64/N641/N43// if other than CV/CVN or Submarine
COMSUBPAC PEARL HARBOR HI//N4/N45/N6// if ship is a Submarine
COMSPAWARSYSCOM SAN DIEGO CA//04F/04R/04C/04L//
Appropriate Battle Group Commander or ISIS
COMCRUDESGRU ___ or
COMCARGRU ___ , and
COMPHIBGRU THREE if ship is an AMPHIB
COMDESRON ___ if ship is a Combatant
COMPHIBRON ___ if ship is an AMPHIB
COMSUBRON ___ if ship is a Submarine
COMNAVSURFGRU PACNORWEST//N43P3// if ship is home ported in Bremerton or Everett Washington (PACNORWEST)
SOUTHWEST RMC SAN DIEGO CA//40/41/42/43/43B//
FTSCPAC SAN DIEGO CA//200/203//
FTSCPAC DET PEARL HARBOR HI//00PH// if ship is an AMPHIB
PEO EXW WASHINGTON DC//PMS470// if ship is a Combatant
SPAWARSYSACT PAC PEARL HARBOR HI//D91/D914// if ship is home ported in Hawaii
SPAWARSYSFAC PAC YOKOSUKA JA//D92// if ship is FDNF/home ported in Japan
SPAWARSYSFAC PAC GU//D93// if ship is FDNF/home ported in Japan
SPAWARSYSCEN CHARLESTON SC//0F1/0F2// only if the ship is in LANT; if so respective LANT Fleet CINC, TYCOM and Squadron PLA's apply
NAVSHIPYD PUGET SOUND WA//SECURITY/1214/1121.6// (as applicable)
NAVSHIP YD AND IMF PEARL HARBOR HI//SECURITY// (as applicable)
SUPSHIP SAN DIEGO CA//C-190// (as applicable)
NSSC PEARL HARBOR HI//N45/N45A// (as applicable)
CHET PEARL HARBOR HI//OIC// (as applicable)

AEGIS TRAREDCEN DET SAN DIEGO CA//N1// (as applicable)
AEGIS TRAREDCEN DET PEARL HARBOR HI//N1// (as applicable)

UNCLAS //N05521//

MSGID/GENADMIN/SPAWARSYSCEN SD/D60F//

SUBJ/VISIT CLEARANCE REQUEST/C4ISR AIT INSTLN SUPPORT//

REF/A/GENADMIN/SPAWARSYSCEN SD/211545ZJUL00//

REF/B/DOC/SECNAVINST 5510.30A/10MAR99//

NARR/REF A IS ORIGINAL VISIT CLEARANCE REQUEST. REF B
IS DEPT OF THE NAVY PERSONNEL SECURITY PROGRAM.//
POC/FAHRENWALD, M./ETCM(SW)/SPAWARSYSCEN SD/-/TEL:DSN 524-3301
/TEL: (619) 524-3301//
AKNLDG/YES/INST: REPLY ONLY IF NEGATIVE//

RMKS/1. THIS MSG SUPERCEDES REF A. IAW REF B, THE
FOLLOWING SPAWAR SYSTEMS CENTER (SSC) SAN DIEGO
PERSONNEL (UIC N66001) MAY HAVE OCCASION TO VISIT YOUR
COMMAND INTERMITTENTLY 18 OCT 00 - 31 DEC 00 IN SUPPORT OF
C4ISR AIT INSTALLATIONS. THESE INDIVIDUALS COMPRISE THE
INTEGRATED INSTALLATION TEAM (IIT) AT SSC SAN DIEGO,
SERVING IN THE CAPACITIES LISTED NEXT TO THEIR NAMES IN
PLANNING AND OVERSEEING ALL SSC SAN DIEGO C4ISR AIT
INSTALLATIONS. REQUEST RETENTION AS A STANDING VISIT
CLEARANCE FROM SSC SAN DIEGO IIT.

A. SSC SAN DIEGO GOVT EMPLOYEES (ALL U.S. CITIZENS, LISTED
ALPHABETICALLY):
1) LAST NAME, FIRST NAME, MIDDLE I; DP-IV (GS-14 EQUIV); SS#; BATTLE FORCE
TEAM LEADER; DPOB 27 JUN 46, COVENTRY UK; CLRD
SECRET.
2) LAST NAME, FIRST NAME; DP-III (GS-13 EQUIV); SS#; BATTLE
FORCE SUPERVISOR; DPOB 24 JUL 43, SAN DIEGO CA; CLRD SECRET.
CODE, PHONE #; CAGE CODE 3J843; FCL SECRET;
WORKING UNDER CONTRACT NR N66001-97-D-0026 (US CIT):
B. EMPLOYEE OF AMSEC LLC; ADRESS; PHONE #; CAGE CODE, FCL SECRET;
WORKING UNDER CONTRACT
1) LAST NAME, FIRST NAME, I; SS# ; SHIP SUPERINTENDENT;
DPOB 22 JUL 59, LINCOLNSHIRE UK; CERTIFICATE OF
NATURALIZATION NR 9027104; CLRD SECRET, EXP 7 MAR 02.
C. EMPLOYEE OF SAIC, STREET ADDRESS, CITY, STATE, ZIP CODE, PHONE #; CAGE
CODE 52302; FCL SECRET; WORKING UNDER CONTRACT NR TADIL-N66001-97-D-0026
(US CIT):
1)LAST NAME, FIRST NAME, MIDDLE; SS#; SHIP SUPERINTENDENT; DPOB
8 APR 57, ROBINSON IL; CLRD INTERIM SECRET, EXP 31 DEC 00.
D. EMPLOYEE OF MILCOM SYSTEMS, STREET ADDRESS, CITY, STATE
ZIP CODE, PHONE #; CAGE CODE 66257; FCL SECRET;
WORKING UNDER CONTRACT NR N00244-96-D-5111 (US CIT):
1) LAST NAME, FIRST NAME, MIDDLE; SS#; SHIP SUPERINTENDENT; DPOB
12 APR 40, PAYNESVILLE MI; CLEARED INTERIM SECRET, EXP DATE.

2. ACCESS TO SECURE SPACES TO DEGREE HELD MAY BE REQ'D.//

APPENDIX H
AFLOAT FUNDING PROCEDURES

All Installation funding is processed through the Fleet Implementation Service Center. All charges for installation efforts will be charged to the Service Center. All non-labor requisitions will be routed through the Service Center Manager for acceptance/approval before submission to the Procurement Department.

Via Customer Order Number (CON) and Job Order Number (JON) linkeage, and a combination of specific and apportioned costing, a given hull's different system installations are integrated or segregated to support reporting requirements. The intent is to capture costs by system per hull in DIFMS, as required by the sponsor and financial reporting guidelines.

The Installation Financial system operates on a principle of phases through the IDB/CETracker and DIFMS. Phase 1 is tasking, estimating, and acceptance of estimate(s). This establishes the budget for expected execution result. If installation conditions evolve (scope of work changes), then an expeditious report of the evolution takes place via the Change Order Request Notification (CORN) process. If cost increase is significantly enough to warrant re-estimating, then the phase 1 process can be repeated including acceptance of the new estimate by the sponsor. Phase 2 involves receiving funding and "allocating" that funding to the plan in DIFMS. This phase is conducted entirely by the IMO and these results are visible in CETracker and DIFMS. The third phase involves the execution of this funding plan by the parties involved in the installation effort.

During phase 1 (discussed above), SPAWAR 04 provides tasking to SSC San Diego of specific system installations by entering them into the Installation Database (IDB). These tasks are sent in a large group during the current Fiscal Year (FY) in preparation for starting the following FY installation work. These Work Items are imported into the SSC San Diego CETracker system and sent to the branch head of the technical code with sufficient expertise to provide a stand-alone estimate for installing the tasked work in accordance with the Work Breakdown Structure provided in CETracker. For this purpose, the technical code with sufficient expertise is determined by historical involvement in the particular installations in a given area and is determined by the IMO Manager (D60F). The branch head then assigns this estimate through the CETracker to a given estimator within the code to provide a compre-hensive estimate based on the known requirements of the installation at the given time. This may result in an accurate estimate of the class "C" type or only be of the value of a Reasonable Order of Magnitude (ROM). This estimate then is automatically processed through the approval cycle in CETracker via the Branch Head, the BFS, the IMO Manager, the D60 Department Head, and finally the IMO Financial group. The CETracker routinely updates the IDB with these estimates to SPAWAR 04 for acceptance. This can result in follow-on meetings to resolve scope and details of estimates that are higher than the expectation of the sponsor. These meetings will be arranged by the IMO for attendance by technical personnel from the estimating code, the IMO, and technical and financial personnel from SPAWAR 04. Once the sponsor accepts the estimate and provides the required funding, then the IMO formally tasks the work. Once formally accepted, the estimate can only be changed by CORN for a bottom-line increase in resource required; the review cycle discussed above pertains.

Once funding is received by the IMO, the process of allocating the funding to the tasked and accepted Work Plan Items (WPI) begins. The IMO Manager has the final decision establishing funding priority. Once allocations are made to the jobs in CETracker, the IMO will establish the plan and Job Orders (JOs) in DIFMS, and notify the IIT of the Service Center JO and authorized plan amount of allocation via e-mail and established JON plan in DIFMS.

The following detail in this appendix describes the JON structure and the charging requirements for labor, travel, material, and Purchase Requests and Purchase Orders in various circumstances. A key requirement is that all Purchase Requests (PRs)/Outgoing Funding Documents (OFDs) require approval by the Service Center Manager before submission to the Procurement Department. The route sheet required for this purpose is provided in this appendix.

1. All Afloat Funding will process through the IMO Service Center.

2. CON/JON Structure:

Service Center CON/JON Structure will consist of:

1 Service Center CON per Hull	4D60F7(X)A
1 Service Center JON per System	4D60F7(X)A11

This will enable us to gather all costs by Hull by the CON and all costs per System by the JON. No expenditure data calls are anticipated back to the tech codes and are not today getting any expenditure data calls.

3. FY01 Estimate/Plan/Allocation. All estimates will continue to be input into CETracker/IFMS at the WIN level. When funding is received, a Service Center JON will be input into BDI. The Plan Amount will be the allocation from CETracker/IFMS. The Allocation and Service Center JONs will be sent out by e-mail to the following:

IIT Lead
IIT Financial POC
Battle Force Officer
Battle Force Superintendent

To facilitate integrated install delivery orders, ALL Contractor Production Effort will be allocated to the Hull Contract JON (see 6. below).

4. Cost Control Responsibility. It will be the responsibility of the IIT Lead through the Ship Sup and NTR to keep all costs for the installation within the limits of the plan. Any increase in COV, SME, or install contractor costs that increase the overall system install plan must be resolved through the IMO (and contracts, if applicable) before execution of the scope increase. The Change Order Request Notification Process is to be followed after DO award.

5. Labor. BFO/BFS and Ship Sup will charge their time as follows:

BFO Military	– 4D60F11M01	Overtime	–	4D60F12M01
BFS Civilian	– 4D60F11J01	Overtime	–	4D60F12J01
Ship Superintendent	– Hull specific CON + "03"	Overtime	–	Same JON

NTR and other government labor will be charged to the Hull/System JONs supported that week.

6. Contracts/Material Purchases/Outgoing Funding Documents. For integrated install Purchase Requests or Outgoing Funding Documents (OFD), 1 JON per PR/OFD will be used. On the multi-systems installations PR/OFD only, tech code will itemize the estimate for each system on the same hull supported by the PR, which hull and systems this task will support, based on the contractor's quote. If quote is not broken out by install task, a pro-ration based on the contractor estimate will be used. A cost transfer performed by the IMO will transfer costs back into the appropriate Hull/System JON based on the itemization pro-ration provided. Generation of Work Order Numbers (WONs) is no longer required in CETracker/IFMS. To track obligations against the hull, the use of the generic Hull/System JON for each hull will be required – Contract's JON will end in 04, OFD's JON will end in 05. Each hull will require a separate PR/OFD – no multiple funding across hulls will be authorized.

Contracts for Subject Matter Expert (SME) will use 1 JON (4D60F31A04) per DO. On the purchase request, tech code will itemize the estimate for which hull and systems this task will support, based on the contractor's quote. If quote is not broken out by install task, a proration based on NTR/SHIPSUP knowledge of tasking involved will be used. A cost transfer performed by the IMO will transfer costs back into the appropriate Hull/System JON based on the itemization provided.

For bulk buys, 1 JON (4D60F23X01) per purchase request will be used. On the purchase request, tech code will itemize the costs for each hull and system this material buy will be used to support. A cost transfer performed by the IMO will transfer costs back into the appropriate Hull/System JON based on the itemization provided.

All other single task (1 hull, 1 system) PR's and OFD's will use the Hull/System specific JON.

COPIES OF ALL MULTI-SYSTEM PURCHASE REQUESTS (PR's and OFD's) WILL BE PRESENTED TO THE IMO SERVICE CENTER MANAGER FOR REVIEW/APPROVAL BEFORE PRESENTATION TO THE PROCUREMENT DEPARTMENT FOR PROCUREMENT ACTION.

7. Accruals. Accruals will be prepared by the Tech Code and accompany the PR presented to the IMO Service Center Manager for review/approval. This must be done concurrently with submission of the contract package Purchase Request or Outgoing Funding Document.

8. Travel. If travel is in support of single task, use Hull/System specific JON. If travel is in support of multiple hull/multiple systems – use 4D60F42X01. Please send IMO Service Center Manager copy of travel request with annotation of prorated costs against hulls/systems travel will support. Local area mileage travel claims not associated with a particular install will be submitted against the generic travel JON for each Hull (will end in 06).

ON	JTG	Hull_ID	Unit_Name	WIN	Alttitle	WBS_ Name	Estimate	Es_Labor	Es_Mat	Es_Trvl	Allocation	Al_Labor	Al_Mat	Al_Trvl	Cog
	Stennis-BHR 02	CVN 74	USS JOHN C STENNIS	K82363	NTCSS Optimized Upgrade	SOVT	2500	2400	100	0	2500	2400	100	0	D634
	Stennis-BHR 02	CVN 74	USS JOHN C STENNIS	K82369	NTCSS Optimized Upgrade	ILS	1000	900	100	0	1000	900	100	0	D634
	Stennis-BHR 02	CVN 74	USS JOHN C STENNIS	K82368	NTCSS Optimized Upgrade	AsBuilt	300	300	0	0	300	300	0	0	D634
	Stennis-BHR 02	CVN 74	USS JOHN C STENNIS	G82367	NTCSS Optimized Upgrade	ProEfrt	9200	9000	100	100	9200	9000	100	100	D634
	Stennis-BHR 02	CVN 74	USS JOHN C STENNIS	G82363	NTCSS Optimized Upgrade	SOVT	2000	2000	0	0	2000	2000	0	0	D634
F73461		**CVN 74 Total**					**15000**	**14600**	**300**	**100**	**15000**	**14600**	**300**	**100**	
F73404	Stennis-BHR 02	CVN 74	USS JOHN C STENNIS	K82367	NTCSS Optimized Upgrade	ProEfrt	14000	12600	1200	200	14000	12600	1200	200	D634
AL		**CVN 74 Total**					29000	27200	1500	300	29000	27200	1500	300	

ROUTE SHEET

ENTER APPROPRIATE CLASSIFICATION

CLASSIFICATION

(DOWNGRADE TO UNCLASSIFIED WHEN MATERIAL IS DETACHED)

DATE RECEIVED _____

USE APPROPRIATE CLASSIFIED COVER SHEET

ORIGINATOR	FILE AND SERIAL NO.	DATE

SUBJECT/DOCUMENT DESCRIPTION

WARNING: DO NOT ENTER CLASSIFIED INFORMATION

Route Sheet for Contracts using the Service Center JON (4DXXXXXXXX)

CODE	INITIALED		ACTION	REMARKS
	BY	ON DATE		*(PLEASE WRITE ON FIRST AVAILABLE LINE IN ORDER TO PROVIDE SPACE FOR ALL WHO MAY WISH TO COMMENT)*
D6XX			I	____ Other DO/OFD required (not yet processed) NTR ____ No other DO/OFD required to complete task
D6XX			I	$_____ (approx) other DO/OFD required (not yet processed) Ship Sup ____ No other DO/OFD required to complete task
DXXX			I	
D6X			I	Admin Review – attach BDI screen and Financial Control Route Sheet
D60F			S	Service Center Manager
D60X			S	Team Lead
D60			S	Contracts over $500K

SYMBOLS: A - ACTION C - COMMENT I - INFORMATION P- PREPARE REPLY R - RETAIN COPY S- SIGNATURE

ENTER APPROPRIATE CLASSIFICATION

CLASSIFICATION

(DOWNGRADE TO UNCLASSIFIED WHEN MATERIAL IS DETACHED)

USE APPROPRIATE COVER SHEET WHEN ATTTACHED MATERIAL IS CLASSIFIED

APPENDIX I
STATEMENT OF WORK (SOW) and PURCHASE REQUEST (PR) DEVELOPMENT/PREPARATION

APPENDIX J
AIT Universal Planning Document (UPD) (used to build an integrated planning document)

- Scope
    - Notional Schedule (Key events)
    - Location of Work
    - Special Requirements (400 Hz, F/M, CH/W)
    - Special Testing requirements (Led paint, Asbestos, Hazmat)
- References
- Requirements
    - Services
    - Storage
    - Man-days
    - Facilities
    - Conditions/Climate Control
    - Testing (pre)
    - Testing (post)
- Additional Notes

Note: This is a preliminary document being negotiated by all Systems Commands.

APPENDIX K
ROLES AND RESPONSIBILITIES

Integrated Installation Team (IIT).

The IIT is chartered and tasked to manage installation of all Space and Naval Warfare Systems Command (SPAWAR)-sponsored Command, Control, Communications, Computer, Intelligence Surveillance and Reconnaissance (C4ISR) systems (hardware, software, and networking) in ships of the U.S. Pacific Fleet. IIT responsibility for C4ISR system installation management in Battle Force (BF) ships will commence prior to D-30 months in the IIT BF inter-deployment cycle to coincide with Installation Drawing Shipcheck planning and continue until deployment. The IIT will ensure that all systems are installed in ships in an integrated manner, fully warranted, and logistically supported with documentation, parts, and state-of-the-art operator and maintenance training. The integrated installations in individual ships will be completed so that the overall BF command, control, and communications continuity is achieved.

a. Installation Management Office (IMO), responsibilities. The IMO functions as the conduit by which SPAWAR Systems Center San Diego receives installation related advance planning and execution tasking and funding. The IMO ensures product delivery within cost, schedule and performance, and does so via its operations and finance staff, and by way of process development and implementation. Specific tasks include:

(1) Formulate installation related policies, processes (CONOPS, etc.)
(2) Conduct IIT Lead oversight.
(3) Assign IIT Battle Force Officers to respective IITs.
(4) Acceptance signature authority for SPAWAR installation related tasking.
(5) Act as funding acceptance and allocation authority for tasking.
(6) Ensure installation planning and execution strategies are formulated/communicated.
(7) Coordinate Installation Readiness Reviews (IRR) via IIT Leads.
(8) Interface directly with echelon-2 managers and counterparts.
(9) Brief over-aching issues as required.
(10) Coordinate C4ISR Installation related IPTs, as necessary.
(11) Maintain metrics pertaining to tasking and installation executions.
(12) Establish, maintain, and manage database and IT business based tools.
(13) Oversee management of installation processes.
(14) Ensure task-related reporting is consistent and delivered as required.
(15) Ensure task-related operations planning occurs in a timely manner.
(16) Manage overarching contracts.
(17) Establish required certification training for IITs.
(18) Oversee the commands Quality Assurance Plan, and the implementation thereof.
(19) Coordinate consolidated warehousing requirements for the IITs.
(20) Coordinate processes with other IMOs and activities.
(21) Ensure message access is afforded to IITs (unclassified and classified).
(22) Coordinate Reservist placement within IITs.
(23) Conduct independent assessments as necessary.
(24) Review and resolves with issuing activity, funding documents with discrepancies.

(25) Develop and update installation/task-related IT business tools.
(26) Establish Job Order Numbers.
(27) Notify IITs via e-mail or IT tool auto reply of funding status.
(28) Allocate funding based on funding allocation requirements of Budgeted Plan.
(29) Prepare and submit Funding Document Acceptance to Funds Processing code.
(30) Establish JONs in BDI.

b. IIT Team Leader, responsibilities. Overall management and oversight of Integrated Installation Team (IIT) Battle Force Officers, Battle Force Superintendents, and Ship Superintendents. Long-range planning starting at D-30 months for execution of installations in ships of respective Battle Forces. Ensure all parties (ship and chain of command, IIT and chain of command, system managers and chain of command) are informed. Ensure all required reports and documentation are completed in a timely manner. Liaison with SPAWAR 05 and PMWs for engineering issues. Liaison with IMO for funding issues. Jointly responsible to SSC San Diego D60F, Installation Management Office and D60 Fleet Engineering Department for these responsibilities. Specific tasks include:

(1) Conduct oversight of IIT Battle Force Officer and Superintendent.
(2) Represent their respective IITs at all reviews.
(3) Attend bi-weekly meetings with the IMO.
(4) Ensure all Naval correspondence for their IITs is accomplished.
(5) Provide all assets, personnel or otherwise, to support respective IIT tasking.
(6) Ensure group and individual unit installation POA&Ms are maintained.
(7) Ensures planning & execution procedures are accomplished.
(8) Provide status reports as required.
(8) Ensure NTR and SME assets support IIT requirements.
(10) Signature approval authority of responses to customer SITREPs.
(11) Maintain records of contract compliance, quality of work, standards of conduct.
(12) Review and compare IIT Ship Superintendent SITREP's with Earned Value Management (EVM) reports and actual cost reporting from contractors.
(13) Ensure daily message reviews (unclassified and classified) are conducted.
(14) Ensure QA Plan, policy and procedures are executed.
(15) Manage respective IITs in the absence of IIT Battle Force Officer & Supervisor.

c. IIT Battle Force Officer, responsibilities. Scheduling for Battle Force availabilities. Work scheduling conflicts and issues. Liaison with SPAWAR 04F for Battle Force scheduling issues. Responsible to IIT Team Lead for Battle Force scheduling and availability and system readiness to install. Ensure timely submission of reports and other engineering documentation. Liaison with OPNAV, NAVSEA Ship Program Manager (SPM), Fleet Commands, TYCOMs, Battle Force /Group Commanders, and Commanding Officers to resolve Battle Force availability scheduling and Battle Force composition issues. Coordinate final authorization to install in Battle Force ships. Specific tasks include:

(1) Provide a military presence to afloat groups and ships.
(2) As/if necessary, represent SPAWAR at BGSIT.
(3) Work in consonance with IIT Battle Force Superintendents.
(4) Manage the execution of installation processes, contracts, and funds.
(5) Attend reviews and VTCs as required.

(6) In the absence of respective IIT Battle Force Superintendent and IIT Ship Superintendent, respond to the SPAWAR Work Plan tasking with timeline-based Integrated Installation Plan(s), and resolve installation issues.
(7) Maintain liaison relationships at all levels, and with SPAWAR 04 managers related to
Work Plan implementation.
(8) Provide weekly status reports, separate from that provided by Ship Superintendents.
(9) Conduct daily message reviews (unclassified and classified). e.
(10) Ensure installation database and related IT tools are updated.
(11) In the absence of respective IIT Battle Force Superintendent, maintain group installation POA&M's, review cost estimates, conduct oversight of IIT-related contracts, delivery orders, statements of work, and funding allocations.
(12) In the absence of respective IIT Battle Force Superintendent, assess Change Order Request Notifications (CORNs), and make recommendations to IIT/IMO.

d. IIT Battle Force Superintendent, responsibilities. Project Manager for Battle Force IIT installations. Scheduling for Battle Force availabilities. Work scheduling conflicts and issues. Liaison with SPAWAR 04F for BF scheduling issues. Responsible to IIT Team Lead for Battle Force scheduling and availability and system readiness to install. Ensure timely submission of reports and other engineering documentation. Liaison with OPNAV, NAVSEA Ship Program Manager (SPM), Fleet Commands, TYCOMs, Battle Force Commanders, and Commanding Officers to resolve Battle Force availability scheduling and Battle Force composition issues. Coordinate final authorization to install in Battle Force ships. Specific tasks include:

(1) Act as counterpart to, and in consonance with respective IIT Battle Force Officer.
(2) Manage the execution of installation processes.
(3) Attend reviews and VTC's, as required.
(4) In the absence of IIT Ship Superintendents, respond to SPAWAR Work Plan tasking with a timeline-based Integrated Installation Plan(s).
(5) Maintain liaison relationship with SPAWAR 04 managers related to Work Plan implementation.
(6) Work with IIT Battle Force Officers to provide weekly status reports.
(7) Coordinate with IIT Leads to obtain IIT assets.
(8) Conduct oversight of IIT related contracts, delivery orders, statements of work, funding.
(9) Conduct EVM analysis.
(10) Conduct cost negotiations with contractors and with NTRs.
(11) Coordinate and monitor multiple and integrated C4ISR installations.
(12) Coordinate responses to customer SITREPs.
(13) Gather data on contract compliance, quality of work, and standards of conduct.
(14) Review, evaluate, and make recommendations pertaining to actual cost reports from contractors.
(15) Review messages daily (unclassified and classified); assist Ship Superintendents in same.
(16) Ensure quality and timeliness of data updates in IT business tools.
(17) Maintain collective group cost, performance, and schedule data.
(18) Maintain group installation POA&Ms from inputs received from Ship Superintendents.

(19) Resolve IIT-specific installation planning and execution problems.
(20) Attend WPIC in the absence of IIT Ship Superintendent.
(21) Review cost estimates.
(22) Assess Change Order Request Notifications (CORNs) and make recommendations to IIT/IMO.
(23) Review and approve all IIT plans, cost estimates, and statements of work.
(24) Recommend planning and execution strategies.
(25) Manage allocated funding via IIT Ship Superintendents.
(26) Conduct cost negotiations with NTR's and with contractors.
(27) Ensure IIT specific installation planning and execution problems are resolved.

e. IIT Ship Superintendent, responsibilities. Represents the Commanding Officer, SSC San Diego to Ship and Submarine Commanding Officers. Verify work performed adheres to scope of tasking, policy, and guidance of this document. Designated person with overall responsibility for the conduct of the Integrated Installation Team. Problem resolutions in consonance with NSTS 9090-310C. Has technical authority over contractor team members; shall be knowledgeable of and responsible for team adherence to all invoked requirements including safety and quality. Provides a single point of contact between the ship and various community activities and coordinates installations with the Regional Modernization Maintenance Control Office (RMMCO). Specific tasks include:

(1) Act as personal representative of SPAWAR Systems Center CO to ship's/sub's CO.
(2) Conduct daily visits to, and status reviews with, ship's CO during production periods.
(3) Update applicable IT business-based tools and installation databases.
(4) Verify funding status pertaining to ships' installations.
(5) Attend scheduling conferences and meetings.
(6) Coordinate production efforts with NTR and Contractor Leads.
(7) Coordinate SID deliveries.
(8) Maintain files of contractor installation POA&Ms.
(9) Verify NTR inspections of work accomplished of contractor efforts, reporting same to IIT Battle Force Officers and IIT Battle Force Managers and, as necessary, to IIT Leads.
(10) Exercise direct authority over all onboard SPAWAR installation teams.
(11) Coordinate interfacing with non-SPAWAR system installation teams.
(12) Coordinate SOVTs, and post installation C4ISR Checkout testing.
(13) Track installation, ILS, and SOVT discrepancies, and document completions.
(14) Draft responses to ship's SITREPs as/if necessary.
(15) Draft all required message traffic and correspondence from initial clearance through final completion and acceptance, and provide same to BFS for release and delivery action.
(16) Draft readiness to start installation advisory messages.
(17) Generate monthly (before production) and weekly (during production) SITREPs.

(18) Coordinate ship checks, in-briefs, and de-brief efforts.
(19) Review contractor POA&Ms and Universal Planning Document with NTRs.
(20) Ensure delivery of required ILS products (including OPNAV 4790/CK's) to ship.
(21) Coordinate and verify SOVTs and SPAWAR systems testing.
(22) Coordinate follow-up visits (if required)
(23) Ensure ship receives adequate training, and that all training is properly documented.
(24) Attend NSA production and WPIC meetings.
(25) Coordinate installation visits with RMMCO.
(26) Signatory on NAVSEA 9090-310 series Installation Completion Reports.
(27) Coordinate shipboard systems interoperability.
(28) Maintain individual ship cost, performance, inspection, and schedule data.
(29) Respond to SPAWAR Work Plan tasking with timeline-based Integrated installation Plan(s).
(30) Coordinate the Change Order Request Notification (CORN) process with the contractor and NTR, and recommends approval/disapproval of CORN.

f. Navy Technical Representatives (NTR), responsibilities. Responsible for installation of individual C4ISR systems in BF ships. Ensure system has current funding, and approved Ship Alteration Record (SAR) and Government-Furnished Equipment (GFE) ready for installations. Writes Statement of Work (SOW), provides and reviews cost estimates for contractor support as required. Provide system engineering and technical direction during installation. Review Ship Installation Drawings (SIDs) and work specifications before and during installation and update and annotate as required to develop final installation As-Built drawings. Conduct system Ship Operation Verification Testing (SOVT) and provide operator and maintenance training, deliver drawings, configuration change forms and other system Integrated Logistic Support (ILS) to ship's company as necessary. Update Ship Selected Record (SSR) as necessary. Report to SSC San Diego Technical Code for installation assignment, pay, travel, and other administrative matters. Report to Ship Superintendent for operational matters concerning individual system installations. Specific tasks include:

(1) Coordinate equipment deliveries.
(2) Coordinate and deliver ILS to customers.
(3) Interface with customers on all technical systems matters.
(4) Support the IITs, technically.
(5) Keep the IITs appraised of PITCO schedules and testing status, and PICO results.
(6) Identify LAR requirements during production efforts; produce and track LARs.
(7) Conduct installation ship checks, in-briefs, production efforts, SOVTs, and de-briefs.
(8) Review and verify contractor produced red-line (as-built) drawings.
(9) Procure installation related Government Furnished Material.
(10) Submit independent government cost estimates, and revisions thereto via the Cost Estimate Tracker of the Installation Financial Management System.
(11) Provide subject matter expertise as required for SID reviews and during production efforts and SOVTs.
(12) Signatory on Installation completion Reports

(13) Schedule, coordinate, and effect installation-related training.
(14) Formulate/review SOVT documents, and conduct SOVTs.
(15) Provide the IIT with install sequencing guidance.
(16) Provide government expertise during installations.

g. IMO ILS Manager, responsibilities. Implements policies and procedures via IIT ILS Coordinators, and provides ILS guidance to the IMO and IITs. Specific tasks include:

(1) IMO Single point of contact for all installation-related ILS issues.
(2) Convey policy, and provide ILS guidance and recommendations for improvement.
(3) Ensure ILS readiness and ILS delivery.
(4) Lead of ILS assessments, as required.
(5) Direct interface with respective codes and POCs within SPAWAR.
(6) Report on ILS readiness and conflicts and problems affecting alteration installations, as required.
(7) Ensure ILS issues referenced by Fleet customers are addressed/answered.
(8) Liaison to Integrated Logistics Support Management Team (ILSMT) meetings.
(9) Develop ILS delivery strategies.
(10) Provide the IITs with ILS support in absence of IIT ILS Coordinator(s).
(11) Maintain lessons learned files.

h. IIT ILS Coordinator, responsibilities. Specific tasks include:

(1) Provide direct support to IIT assigned.
(2) Execute IMO fleet support policies and processes.
(3) Interface with IMO ILS Coordinator.
(4) Coordinate ILS deliverable turnover to fleet customers.
(5) Maintain ILS records, and an ILS Delivery Discrepancy Tickler System.
(6) Effect quality and timely updates of ILS data in IT business tools.
(7) Resolve all ILS-related problems.
(8) Identify priority requirements for deficient ILS Certifications at 90 days before schedule installs.
(9) Point of contact for logistics issues for Battle Force Officers, Battle Force Superintendents, Ship Superintendents, NTRs, In-Service Engineering Agents, fleet customers, Naval Supervising Activities (NSA), Integrated Logistics Overhaul Teams, NAVSEA and PEO POCs, and SPAWAR Program Office representatives.
(10) Assist in the effectiveness of ship installation In-Briefs.
(11) Provide “Hull-tailored” ILS Certification documentation to ship customers.
(12) Represent the IIT as integrated ILS deliveries.
(13) Perform configuration research for outstanding ILS data elements in support of IITs.
(14) Coordinate ILS delivery schedules for IITs.
(15) Track by exception ILS products to ensure timely delivery.

i. The IIT Quality Manager. The Quality Manager is responsible to the Commanding Officer, SSC San Diego, for the development and implementation of procedures, processes. Quality Manager reports directly to the Commanding Officer through SSC San Diego D60 and is tasked for:

(1) Developing quality assurance policy including developing and maintaining the Quality Assurance System Manual.
(2) Developing standardized procedures, criteria, and methods for implementation throughout the Quality Assurance Program.
(3) Assisting SSSC San Diego D30, D40, D60, D70, D80, D90, IIT Leads, IIT Battle Force Officer/Managers, IIT Ship Superintendents, NTRs, and SSC Chesapeake Det Pacific, SSC San Diego in implementing and executing the Quality Assurance Program.
(4) Performing oversight to ensure compliance with this document and referenced requirements and reporting to SSC San Diego D60 using QP101, “Reviews”.

j. IMO Waterfront Production Manager. The IMO Waterfront Manager is the IMO’s direct representative on the waterfront in support of IIT installation efforts. This manager provides support to IITs in the areas of cost, schedule and performance, controls cost, and scope of work increases through managing the Change Order Request Notice, and also provides an interface with Naval Supervising Activities (NSA) such as the Superintendent of Shipbuilding (SUPSHIP). Specific tasks include:

(1) Develop effective waterfront processes in support of Ship Superintendents and NTRs for accomplishment of IIT installations within acceptable cost, schedule and performance parameters.
(2) Attend IIT Installation In-Briefs.
(3) Process team lead for Change Order Request Notification (CORN).
(4) Conduct scheduled and unscheduled ship visits to assess work performance, adherence to safety and QQ procedures, teaming conditions.
(5) Maintain visit/assessment files, reporting weekly to the head of the IMO.
(6) Assist IITs as necessary when emergent conditions arise.
(7) Keep Battle Force Officers, Battle Force Superintendents appraised of how new processes are working.
(8) Interface directly with Ship Superintendents and NTRs, as necessary.
(9) Coordinate higher level conflict resolutions beyond the IITs ability.
(10) Represent the IMO at meetings, visits, video teleconferences and conferences, as required.
(11) Provide technical assessments pertaining to design problems.

APPENDIX L
CHANGE ORDER REQUEST NOTIFICATION (CORN)

The Change Order Request Notification (CORN) process is in place to ensure expeditious notification by the installing contractor of issues and situations that are different than the work that was bid and awarded. Primarily, it provides early notification of a Significant Cost Growth or Change in Work Scope that would require an increase in cost. Additionally, it provides early "Red Line" identification, drawing inaccuracies, while providing the best possible technical solution. The CORN process helps to formalize the process of timely submission of "LARs".

Executed properly, it will bring Quality Control to the installations and allow for determination of actual costs and limit after-the-fact modifications. A key element of this process is that no additional work or change in scope will be authorized without prior approval of a subject "CORN" form.

Please note that only D20 Contracts Department personnel authorize approval of additional work or change in scope. NTRs/SMEs and Ship Sups "DO NOT" have the authority to authorize any additional work where a significant cost is involved.

The process is encapsulated on the form on the following page. The first part of Form SSC SD 4720 is to be filled out by the Contractor to include: Basic information taken from the DO, System affected, Problem or Condition, ROM in Man Hours. It should then be discussed with the NTR and Ship Sup to obtain concurrence that there is indeed a requirement (work beyond the scope of the DO) for the CORN. Once all are in agreement, they should initial and date, if they are not available, note on the form that all are aware and concur. At that point, the CORN is routed internal to the Contractor to his Contracting group. They develop a Class A ROM based on their specific Labor categories. They then sign and date the CORN and this becomes the Certificate of Discovery and the clock begins to tick at that point. The Contractor faxes the CORN to the SSC San Diego IMO CORN POC, for login and verification from the NTR. If not already signed, the NTR can sign at that time with the forwarding recommendation, i.e., Accept/Issue Mod or Reject. If rejected, they must state why in the associated block Nr. #25. The IMO CORN POC forwards it for review and approval to the IMO Financial Manager, BFO/BFS, Ship Superintendent, IIT QA Manager, and IMO Waterfront Production Manager, who forward it to further parties as necessary (i.e., NTR, COR). The purpose of forwarding all listed personnel is for a parallel review in order to expedite the process. The IMO Financial Manager identifies the resource dollars and signs the form. The IMO Waterfront Production Manager signs off in the close out block and passes the CORN to the IMO CORN POC who forwards a copy of the completed and signed form to D20 and informs them that work beyond the scope of the DO has been determined to be required and funding identified. D20 then authorizes the contractor to proceed with the work.

The Change Order Request Notification is used to change cost estimates, allocations, written individual jobs, and to record changes that permanently effect cost as it pertains to schedule and performance, but it is also used to record no-cost changes in work scope.

CHANGE ORDER REQUEST NOTIFICATION

SHIP NAME	HULL NO.	LOCATION	IMO (SSC-SD) SERIAL NO.
SYSTEM INVOLVED	JOB ORDER NO.	SUBHEAD	WPI-FISCAL YEAR
DELIVERY ORDER NO.	CONTRACT NO.	COR	
CONTRACTOR (COMPANY NAME)	CONTRACTOR CONTACT (MANAGER NAME)	MANAGER PHONE NO.	
ORIGINATOR/ CONTRACTOR NAME	ORIGINATOR/ CONTRACTOR PHONE NO.	DATE AND TIME OF DISCOVERY	

GFI CONDITION (PLEASE CHECK ITEMS THAT APPLY)

	ILLEGIBLE OR MISSING PRINT		GFM		CONFLICTING PRINT
	PRINTS DO NOT REFLECT EXISTING CONDITIONS		INCORRECT SPECIFICATIONS COMPARTMENT NO.		
	PRINT NO.				

PROBLEM OR CONDITION (PLEASE EXPLAIN IN DETAIL):

FORMAL PRICE / CORN COST: $		ROM WORK HOURS:	

QUALITY ASSURANCE

ADDITIONAL QUALITY REQUIREMENTS?		YES		NO		N/A

IF YES, LIST REQUIREMENTS

NTR CERTIFICATION

DISCOVERY AND COMMENTS:

NTR (PRINT AND SIGN NAME)	DATE/TIME

D60 IMO FINDINGS, RECOMMENDATIONS AND GENERAL COMMENTS

RECOMMENDED ACTION:		ACCEPT CORN		REJECT CORN		
MODIFICATION INVOLVED:		YES		NO	PLANNING YARD:	

CORN METRICS (CHECK APPROPRIATE BOX OF PREDOMINANT CAUSE)

	DM *(Design Material; material in SIDs listed inaccurate or*		**DS** *(Design in SIDs; inaccurate design)*		**DD** *(Delivery; SIDs not delivered on or before A-120)*		**SD** *(Schedule; Delay and Disruption)*
	SF *(Ship' s Force; a ship induced condition/disruption in*		**SS** *(Ship' s schedule; DM related)*		**CA** *(CNO Availability; affected by work in industrial site)*		**HD** *(Delay in Headquarters Centrally Procured Material)*
	KTR *(Contractor; clean-up of discrepancies, re-work)*		**SAR** *(SAR not performed in time)*		**CS** *(Change in Scope)*		

COMMENTS

RESOURCES AUTHORIZED (FINANCE SIGNATURE)	DATE/TIME	CLOSE OUT (IMO SIGNATURE)	DATE/TIME

ADDITIONAL COMMENTS	**NET COST $**

SSC SD 4720/1 (Rev 06-01)

APPENDIX M
IIT Calendar of Events

CALENDAR OF ROUTINE EVENTS PERTAINING TO INTEGRATED INSTALLATION TEAMS

WEEKLY

Event/Meeting	*Day of Week*	*Attendees*
IIT Huddle	Monday 0800-0830	IMO, BFO, BFS QA, I2K COR, C4ISR Check-Out Lead
EVM-EAC Reviews With Contractors	When announced	IMO, BFS
Battle Group Install Planning Working Group	Thursday 0800-1100	BFO, Design Coordinator

BI-WEEKLY

Event/Meeting	*Day of Week*	*Attendees*
Integrated Installation Team Meeting	Wednesday 1300-1500 (Govt. payday)	IMO, BFO, BFS, IITL, D60
Installation Progress Meeting with SPAWAR 04	Friday 0900-1000 (Govt. payday)	IMO, BFS

OTHER

Event/Meeting	*Day of Week*	*Attendees*
Fleet Video Teleconference (VTC)	1st and 3rd Tuesday 1100-1300	BFO, IMO

APPENDIX N
Liaison Action Record
(LAR)

The Liaison Action Record (LAR) process is the only recognized means to document issues with approved drawings (problems, relocations, etc.).

Here are a few key points:

- Governing instruction: NAVSEA Tech Spec 9090 – 100
- Who drafts: Anyone who knows about the issue (KTR, NTR, ISEA, Ship Sup, Ship, etc.).
- Who submits: The Ship Sup. This direction is not yet documented for SSC San Diego, but 9090 – 100 directs that we have a single POC for submitting LARs. The Ship Sup should be that POC since the Ship Sup is the POC for all issues impacting the installations on the ships.
- CORNs involving design changes must reference the LAR number.
- Whenever a design problem is discussed, one should ask whether or not a LAR was submitted.
- LARS are the only way to correct issues impacting future installations (either on that ship, across a class, or even across classes) since the planning yards to not incorporate red-line mark-ups into future installations if a LAR is not submitted.
- The SPAWAR 04R-3 class desks and planning yards on-site reps in the design war room can help with the LAR process.
- The Design & Plans Lead is responsible for tracking LARs and associated CORNs.

LAR Process

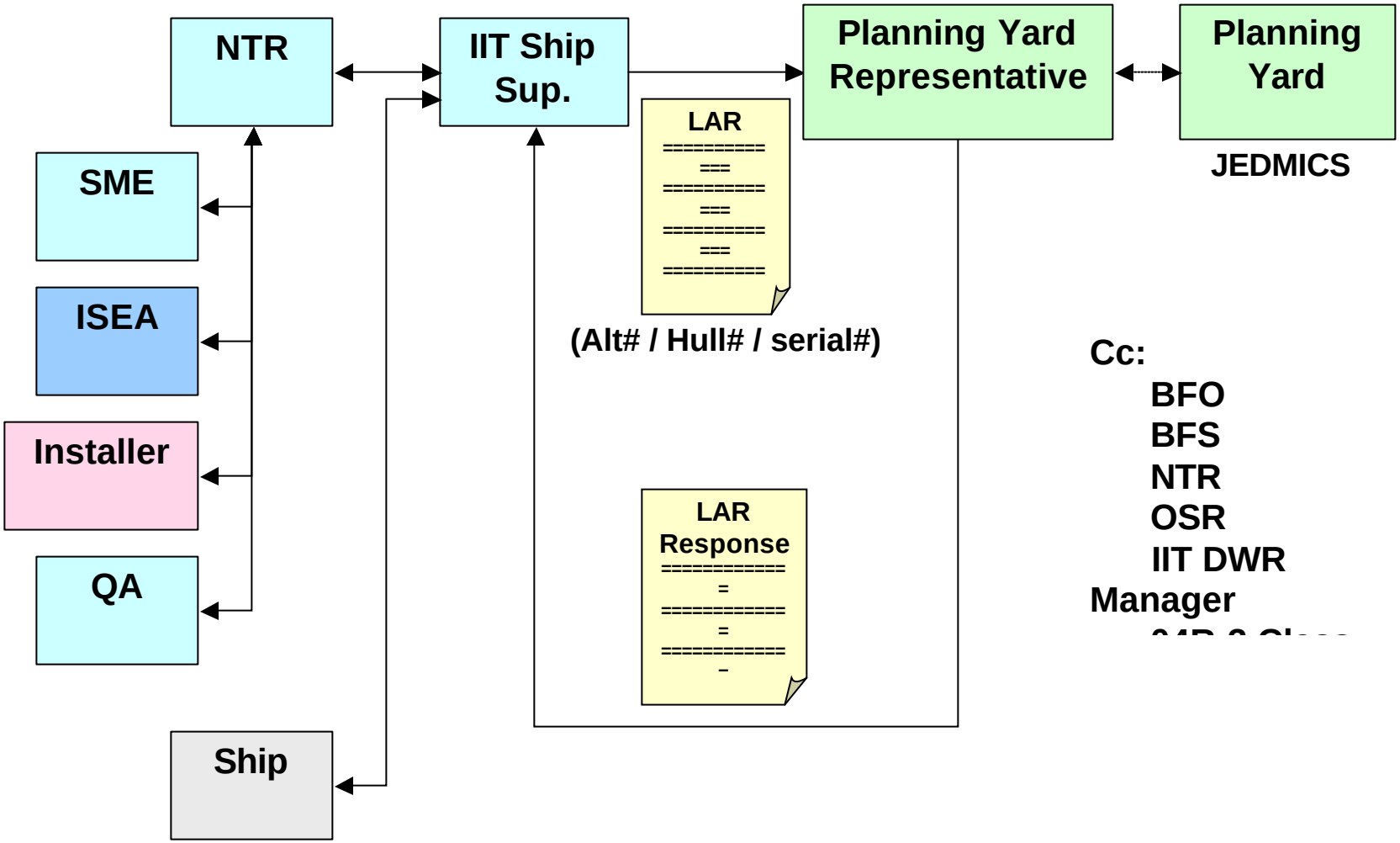
NTR
IIT Ship Sup.
Planning Yard Representative
Planning Yard
JEDMICS
SME
ISEA
Installer
QA
Ship
LAR
==========
===
==========
===
==========
===
==========
(Alt# / Hull# / serial#)
LAR Response
==========
=
==========
=
==========
-
Cc:
BFO
BFS
NTR
OSR
IIT DWR
Manager

APPENDIX O
COST ESTIMATE DATABASE (CEDB) or COST ESTIMATE TRACKER (CETracker)

Cost Estimate Database (CEDB) or Cost Estimate Tracker (CETracker) Overview
CETracker is a secure. World Wide Web (WWW) hosted, role-based, Business Operation Support System (BOSS) that supports the Budget and Planning of the IMO. It codifies the Cost Estimating, Funding Allocation, Task Assignment, and Install Management functions of the IMO. CETracker uses standard Web programming techniques to transition a physical business rule-set into a dynamic, process driven version of those same business rules. Used in this context, CETracker gives total visibility of all Afloat Sponsor-tasked installations.

High-Level Description
The Work Plan is received by the IMO and identifies the system being installed on a particular Unit Identification Code (UIC). This Work Plan also specifies tasking details in the form of a Work Breakdown Structure (WBS). CETracker captures this information. Each Work Plan Item (WPI) is then routed to the Technical Code responsible for estimating the respective system. The Technical Code submits an estimate, based on the WBS, to accomplish the installation. This Quote goes through the internal approval cycle before being returned to the IMO. The IMO reviews the estimate for technical feasibility and financial viability. If the estimate is rejected, it is returned to the Technical Code for re-evaluation. If the estimate is accepted by the IMO, it is sent to D60 for final approval. Again, if the estimate is rejected by D60, it is returned to the Technical Code for resubmission. If the estimate is accepted by D60, it becomes a excepted estimate awaiting funding.

When funding is received, the IMO Financial Group inputs the relevant data into CETracker. Service Center Customer Order (CO) and Job Order (JO) Numbers are created. A Service Center Job Order (SCJO) Number is automatically assigned by the Work Item Number (WIN) associated with the Work Plan Item (WPI). An allocation is then made to the WPI WIN. WINs are a further breakout of the WBS. This breakout is designed to facilitate the assignment of the lowest level of tasking to either Contractor or Government personnel. Once funds have been allocated for a WPI, CETracker can then track the entire functional and financial history of that WPI.

CETracker is also used by the BFO/BFS/Ship Superintendents to manage their respective installations. Through the CETracker interface, they are able to provide Timeline Summary inputs and to track the progress of their respective installations.

Task-and-Response, Cost Estimate Process

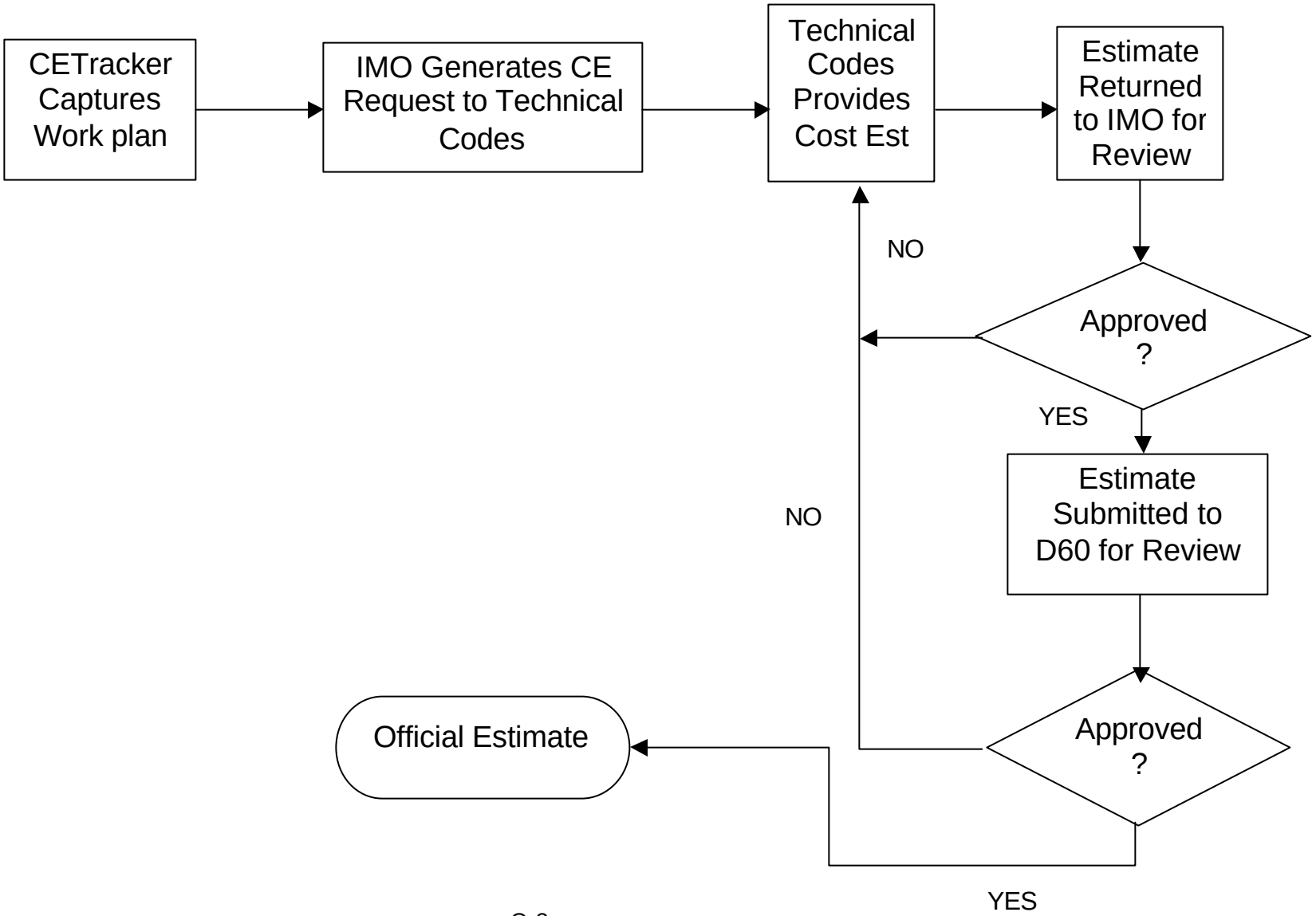

When Funding is Receive

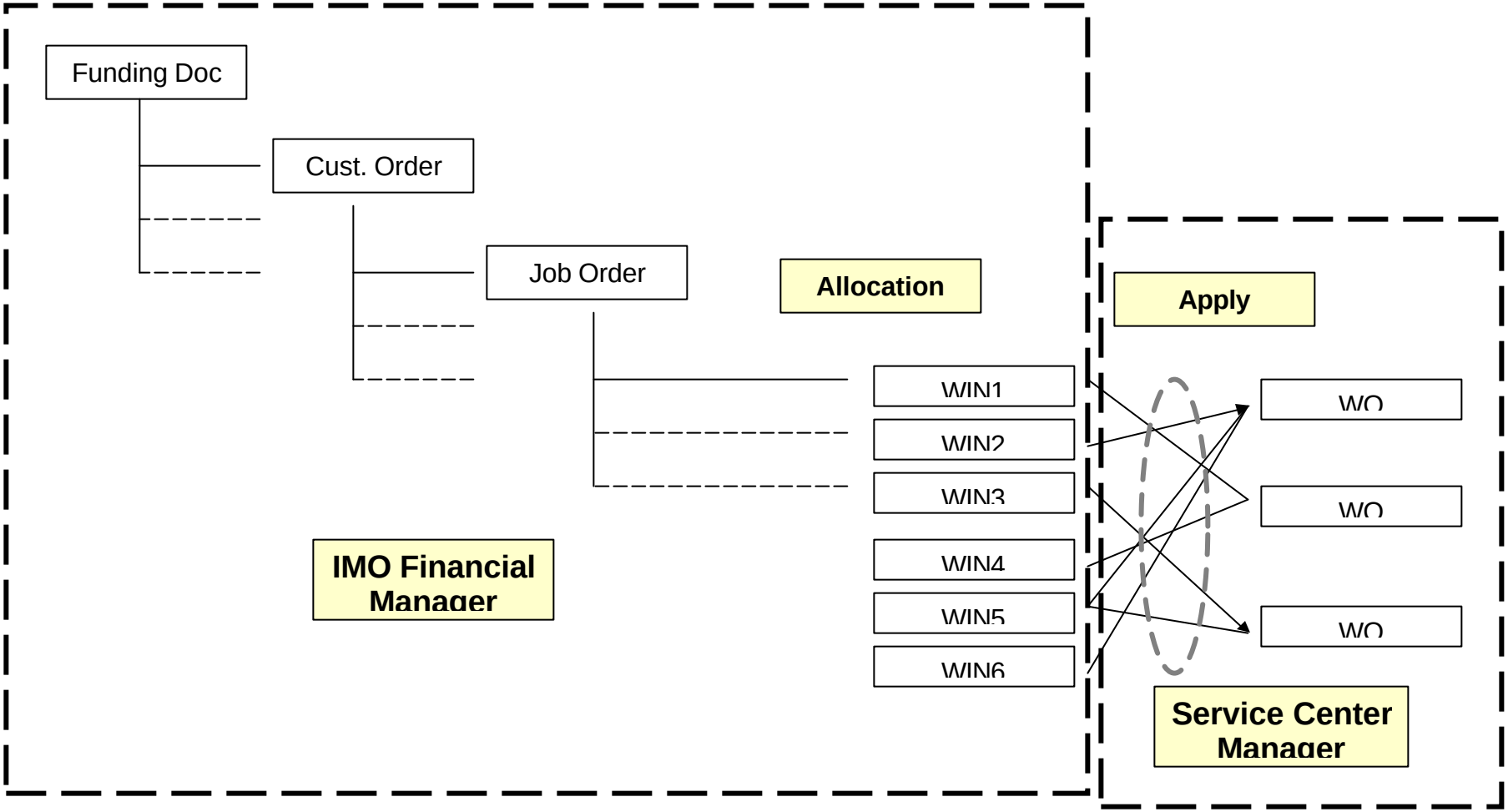

APPENDIX P
GLOSSARY

Appendix P

GLOSSARY

A-x	This indicates the ‘x’ number of *days* before Availability start (which is equivalent to installation start but not always)
D-y	This indicates the ‘y’ number of *months* before the ship’s deployment.
BFO	Battle Force Officer – Military Officer single point of contact responsible for the installations on all ships in the Battle Group and associated Amphibious Readiness Group (ARG) and Middle East Force (MEF) Deployers.
BFS	Battle Force Superintendent – Civilian counterpart to the BFO responsible for the installations on all ships in the Battle Group and associated Amphibious Readiness Group (ARG) and Middle East Force (MEF) Deployers.
CETracker	Cost Estimate Tracker – Web-based database for information related to the tasked installations, including all aspects of resources required and their status, schedule planned and executed.
CON	Customer Order Number – First part of a charge number in DIFMS.
COR	Contract Officer Representative – Technical point of contact for a specific contract through whom all delivery orders are prepared.
CORN	Change Order Request Notification – Document provided by a contractor to identify any cost growth or circumstances that are different than those identified in the Delivery Order.
DIFMS	
DO	Delivery Order – A contractual document drawn up against an existing contract ordering the services defined in the contract under the specific case specified in the Delivery Order.
EDD	Estimated Delivery Date
IBFT	Integrated Battle Force Training - xxxxxxxxxxxxxx
IDTC	Inter-Deployment Training Cycle – The time period for USN ships between deployments marked by periods of ship maintenance, off ship training and operations and training leading up to deployment.
IFMS	Installation Financial Management System – The over-arching system as described under CETracker including future upgrades and links to other databases.
IIT	Integrated Installation Team – The entire team from SSC and contractors who are involved in a ship’s installation design, planning, engineering and execution.
ILS	Integrated Logistic Support – The sum total of the logistic support that is associated with a system SHIPALT (i.e., Spare parts, technical documentation, training documentation, training courses, operational documentation, maintenance documentation, configuration documentation…)

IMO	Installation Management Office – The Installation Program Manager and his specific staff overseeing all technical and financial aspects of the installation program and its policies.
IPM	Industrial Program Manager -
ISEA	In-Service Engineering Agent – A field activity technical code identified by a specific system Program Manager as the final technical authority for the specific system.
IUPD	Integrated Universal Planning Document
JON	Job Order Number – A job specific charge number in DIFMS.
NSA	Naval Supervising Activity – The Navy organization responsible for the success of all aspects of a CNO availability. Usually the Supervisor of Shipbuilding or a Naval Shipyard.
NTR	Naval Technical Representative – A government representative, usually from a technical code, who is the senior technical representative associated for a given system install on a specific ship.
OFD	Outgoing Funding Document – A document which passes part of SPAWARSYSCEN obligating authority to another Navy Activity.
RMC	Regional Maintenance Center – Command responsible for the brokering of all maintenance and establishment of centers of excellence for maintenance within a geographic region. The local RMC is Southwest RMC.
RMMCO	Regional Maintenance and Modernization Coordination Office – The organization responsible for ensuring all alterations occurring by Alteration Installation Team (AIT) aboard fleet ships have all proper approvals and are compliant with all governing instructions. Our local RMMCO is SW-RMMCO headed by the RMC deputy.
SAR	Ship Alteration Record – Base document of an authorized Shipalt specifying the system components and interfaces. Approved by the SPM.
SID	Ship Installation Drawing – A set of drawings developed from a SHIPALT that provide the specific requirements to install a system on a specific ship.
Ship Sup	Ship Superintendent – The IIT single point of contact and person overall responsible for the installations on a particular ship.
SHIPALT	Ship Alteration – The formalized documentation for configuration control and system plans that describe in intermediate detail the architecture and requirements for the specific system on a specific ship class. It does not provide the detail to install the system on any ship.
SPM	Ship Program Manager – The NAVSEA organization overall responsible for all aspects of a ship class, including maintenance requirements, configuration control, modernization program.
SOW	Statement of Work – The portion of a delivery order where the task requirements are specified.
SUPSHIP	Supervisor of Shipbuilding – The NAVSEA field organization responsible for New ship construction and modernization contracting. In San Diego SUPSHIP contracts with all the private shipyards for ship maintenance and repair.

TEMPALT	Temporary SHIPALT – An under development SHIPALT identified in a category which allows for less of the support required of formal SHIPALTS. A TEMPALT installation must be removed within one year and replaced with the formal alteration or the ship reconfigured.
TYCOM	Type Commander – The Naval Commander of a ship type (i.e. Surface Ships, Submarines, Aircraft Carriers), responsible for training and readiness of all assigned ships.
UPD	Universal Planning Document
WIN	Work Item Number – A CETracker number that identifies a specific Government or Contractor cost element at the Work Breakdown Structure (WBS) level of a specific system estimate.
WPIC	Work Package Integration Conference – Conference hosted by the RMC Port Engineer to determine the sequencing of all the work and identify and resolve conflicting requirements.
WON	Work Order Number – A CETracker number that identifies a specific system or group of systems installation DO.

Approved for public release; distribution is unlimited.

Publishing authority: Space and Naval Warfare Systems Center, San Diego, CA 92152-5001