Technical Document 2760
April 1995

High Frequency (HF) Automatic Link Establishment (ALE) Transition Plan

Ogden Government
Services Corporation
SEMCOR, Inc.

Approved for public release; distribution is unlimited.

EXECUTIVE SUMMARY

Power projection/littoral warfare operations, as articulated in “From the Sea....,” depend heavily on reliable inter-/intra-force connectivity, both in dominating the littoral battle space in preparation for amphibious warfare and during the critical transition ashore when ship-to-beach connectivity is essential to ensuring all forces share a common tactical picture. Key to meeting these connectivity requirements are automated High Frequency (HF) communications systems capable of agile frequency selection, automated circuit establishment, and channel monitoring.

This paper articulates an HF ALE Transition Plan which.

1. Describes an evolutionary HF Automated Link Establishment (ALE) technology transition process that points toward HF 2000, a modern, automated HF communications system that manages resources to optimize data throughput and minimize operator intervention while maintaining reliable connectivity in even the noisiest environments; and
2. Delineates a prioritized ALE implementation plan which transitions Navy to an inter-/intra-BattleGroup (BG)/Amphibious Ready Group (ARG) ALE capability which meets Joint/Allied/NATO interoperability requirements.

The HF ALE Transition Plan was developed through the process of:

1. Analyzing BG and ARG communications plans and circuit requirements.
2. Establishing criteria to determine a circuit’s suitability for ALE.
3. Identifying circuits in typical BG/ARG communications plans which are potential candidates for ALE.
4. Analyzing HF communications technologies to develop configuration options.
5. Establishing platform implementation priorities based on warfare tasking and command support requirements.
6. Reviewing budgetary plans for acquisition and installation.
7. Identifying preferred implementation options that would satisfy operational, technical and affordability requirements.
8. Time sequencing recommended options to execute the most cost-effective transition of ALE into the fleet.

The HF ALE Transition Plan presented is therefore based on the full, broadband, MILSTD-188-141A compliant HF 2000 Architecture and provides the warfighter an affordable ALE capability that takes into account the full spectrum of operational considerations.

CONTENTS

SECTION ONE **1-1**

INTRODUCTION **1-1**

1.0 INTRODUCTION 1-1

1.1 BACKGROUND 1-1

1.2 ALE TRANSITION PLAN 1-3

SECTION TWO **2-1**

ALE OPTIONS **2-1**

2.1 OVERVIEW 2-1

2.2 ALE SUPPORT RULES AND TECHNICAL REQUIREMENTS 2-1

2.2.1 ALE Rules of Operation 2-2

2.2.2 Technical Capability Required to Support ALE 2-2

2.3 HF TRANSMISSION CHARACTERISTICS 2-3

2.3.1 Frequency and Antenna Radiation Patterns 2-3

2.3.2 Environmental Factors Affecting HF Skywave Propagation 2-4

2.4 ALE OPTIONS (1-4) 2-5

2.4.1 Option 1: Automatic ALE Transceiver Subsystem 2-6

2.4.2 Option 2: ALE Modem/Controller 2-7

2.4.3 Option 3: Broad band Receiving Subsystem (with variations A - E) 2-8

2.4.4 Option 4: Broadband System 2-12

2.5 ALE OPTIONS EVALUATION 2-12

2.5.1 Supporting Rules of Operation 2-14

2.5.2 Meeting Technical Requirements 2-15

2.5.3 Capabilities and Benefits 2-16

2.5.4 Option Limitations 2-16

2.6 OPTION TRADE-OFFS 2-17

2.6.1 Option 1 Trade-Offs 2-17

2.6.2 Option 3 Trade-Offs 2-18

2.6.3 Option 4 Trade-Offs 2-19

2.7 ALE OPTIONS AS POTENTIAL SOLUTIONS 2-19

SECTION THREE 3-1

ALE TRANSITION PLAN 3-1

3.1 OVERVIEW 3-1

3.2 ALE IMPLEMENTATION PRIORITIES 3-1

3.3 ALE TRANSITION PLAN PROCESS 3-2

3.3.1 POM ALE Transition Plan 3-3

3.3.2 HF ALE Transition Plan 3-4

3.4 ALE TRANSITION PLAN 3-5

3.5 ALE OPERATIONS 3-6

3.5.1 Broad band ALE Operations 3-7

3.5.2 Non-Broadband ALE Operations 3-7

3.6 THE NEXT STEP: ALE CONCEPT OF OPERATIONS 3-8

APPENDIX A: ACRONYMS A-1

APPENDIX B: BIBLIOGRAPHY B-1

APPENDIX C: COMMUNICATIONS PLANS C-1

C.1 COMMUNICATIONS PLANS C-1

APPENDIX D: SHIPBOARD EQUIPMENT D-1

D.1 SHIP EQUIPMENT D-1

D.2 EXISTING SHIP EQUIPMENT D-1

D.2.1 Standard Narrowband HF Configuration D-2

D.2.2 Modified Standard Narrowband HF Configuration D-2

D.2.3 LHA Narrowband HF Configuration D-3

D.2.4 CV Narrowband HF Configuration D-3

D.3 BROADBAND EQUIPMENT D-4

D.3.1 Existing Broad band Equipment D-5

D.3.2 New Ship Broadband Equipment D-5

D.4 HF EQUIPMENT SUMMARY D-6

APPENDIX E: CONFIGURATION ANALYSIS E-1

E.1 ALE TRANSITION OPTIONS E-1

E.2 OPTION 4 (BROADBAND SYSTEM) ONLY E-1

E.3 OPTION 3D (BROADBAND RECEIVING SUBSYSTEM) ONLY E-2

E.4 OPTION 3E (BROADBAND RECEIVING SUBSYSTEM—AN/SRA-49 AND PRESELECTOR CONFIGURATION) ONLY E-2

E.5 COMBINATION OF OPTION 4 (BROADBAND SYSTEM) AND OPTION 3D (BROADBAND RECEIVING SUBSYSTEM) E-2

E.6 COMBINATION OF OPTION 4 AND OPTION 3E BROADBAND RECEIVING SUBSYSTEM—AN/SRA-49 AND PRE-SELECTOR CONFIGURATION) E-3

E.7 COMBINATION OF OPTION 4 AND OPTION 1 (AUTOMATIC ALE TRANSCEIVER SUBSYSTEM) E-3

E.8 COMBINATION OF OPTION 4, OPTION 3E (BROADBAND RECEIVING SUBSYSTEM—AN/SRA-49 AND PRE-SELECTOR CONFIGURATION) AND OPTION 1 (AUTOMATIC ALE TRANSCEIVER SUBSYSTEM) E-3

FIGURES

1-1. USS Tarawa ALE equipment configuration 1-2

2-1. ALE modem controller 2-1

2-2. (A) Antenna radiation patterns 2-4

2-2. (B) Antenna radiation patterns 2-4

2-3. Option 1 automatic ALE transceiver 2-6

2-4. Option 2 ALE modem/controller 2-7

2-5. Option 3A broadband receiving subsystem 2-8

2-6. Option 3B broadband receiving subsystem 2-9

2-7. Option 3C broadband receiving subsystem 2-10

2-8. Option 3D broadband receiving subsystem 2-11

2-9. Option 3D broadband receiving subsystem 2-11

2-10. Option 3D broadband receiving subsystem 2-13

D-1. Generic narrowband HF system D-2

D-2. Generic broadband HF system D-5

TABLES

2-1. Operational rules for ALE 2-14

2-2. Technical requirements for ALE 2-15

2-3. Technical requirements for ALE 2-16

2-4. Limitations of ALE options 2-17

3-1. ALE platform priorities 3-2

3-2. POM installation plan 3-4

3-3. HF ALE transition plan (modified POM) 3-6

C-1. Desert Shield/Desert Storm communications plan C-2

C-2. ARG communications plan C-6

D-1. Installed HF equipment versus ship classes D-7

SECTION ONE

INTRODUCTION

1.0 INTRODUCTION

Power projection/littoral warfare operations, as articulated in “From the Sea [reference (1)], depend heavily on reliable inter-/intra-force connectivity, both in dominating the littoral battlespace in preparation for amphibious warfare and during the critical transition ashore when ship-to-beach connectivity is essential to ensuring all forces share a common tactical picture.

In addition to a common tactical picture, the Commander, Joint Task Force (CJTF)/Expeditionary Force Commander requires reliable Joint C4I connectivity, with flexibility from short range to nearly global, and interoperability with multiple C4I and combat support systems. Key to meeting these connectivity requirements are automated HF communications systems capable of agile frequency selection, automated circuit establishment, and channel monitoring.

1.1 BACKGROUND

HF communications plays a vital role in providing the tactical communications required to ensure success in Navy, Joint, and Allied military operations [reference (2) and (3)]. Indeed, in a typical Battle Group/Amphibious Ready Group’s Communications Plan, approximately 30 to 40 percent of the specified circuits are either an HF primary circuit or an HF secondary circuit [Appendix C]. It is, however, a challenging and demanding frequency spectrum in which to operate, from both a technical and warfighting perspective.

To meet the warfighting requirements of “From the Sea...,” HF communications, as with any deployed communications system, must incorporate the technical advances that have occurred in the past 10-20 years. To this end, a structured approach to the improvement of existing HF communications and the development and/or consideration of new HF communications capability through technology insertion, technology integration, and technology demonstration is underway. The purpose is twofold: (1) to test technical feasibility in an operational environment at minimal cost, and (2) to provide Battle Group and Amphibious Ready Group Commanders the warfighting capabilities of leading-edge technologies as they emerge (or are developed). A number of initiatives have been undertaken and significant improvements in HF system performance demonstrated in the past three/four years, including the successful use of Automatic Link Establishment (ALE) equipment and procedures out to several thousand miles [reference (4)].

ALE is designed as an integral part of establishing and maintaining communications connectivity. A link is automatically established with the responding unit when a usable frequency is identified. When the link degrades or becomes unusable, ALE can be manually directed to reestablish that link. When utilized in its full capacity, ALE makes circuit establishment transparent to the user. When used as a support tool, ALE can be used to monitor the frequency spectrum and assist in finding clear frequencies.

In 1990, ALE supported HF communications was successfully used to automatically test several frequencies assigned for use between the USS *Iwo Jima* (LPH-2) and the Naval Communications Station, Sicily. This demonstration confirmed the potential for ALE to form the basis for an automated HF communications system [reference (5)]. Subsequently, in 1992, an HF radio with ALE and Serial Tone Modem (STM) was used to successfully establish and maintain HF communications

between USS *Tarawa* (LHA-1) and the Naval Communications Station (NAVCOMSTA), Diego Garcia, while USS *Tarawa* was deployed to the Western Pacific and the Indian Ocean. ALE was used to automatically test and select the optimum HF channel from among the assigned frequencies and establish connectivity between USS *Tarawa* and the serving NAVCOMSTA [reference (6)].

During a three-month period, from 1 July through 15 October 1992, the ship passed virtually all traffic over the ALE system. Actual record traffic throughput was measured at 600 bps via Harris Model 5254C modems, which were interfaced to KG-84C encryption devices and standard data terminal equipment. ALE-supported HF communications proved to be extremely reliable and effective. Test results showed that narrative traffic was received virtually error-free, and that communications were able to be maintained over paths previously considered unworkable with existing shipboard equipment and techniques. The block diagram of the radio system used aboard USS *Tarawa* is shown in Figure 1-1.

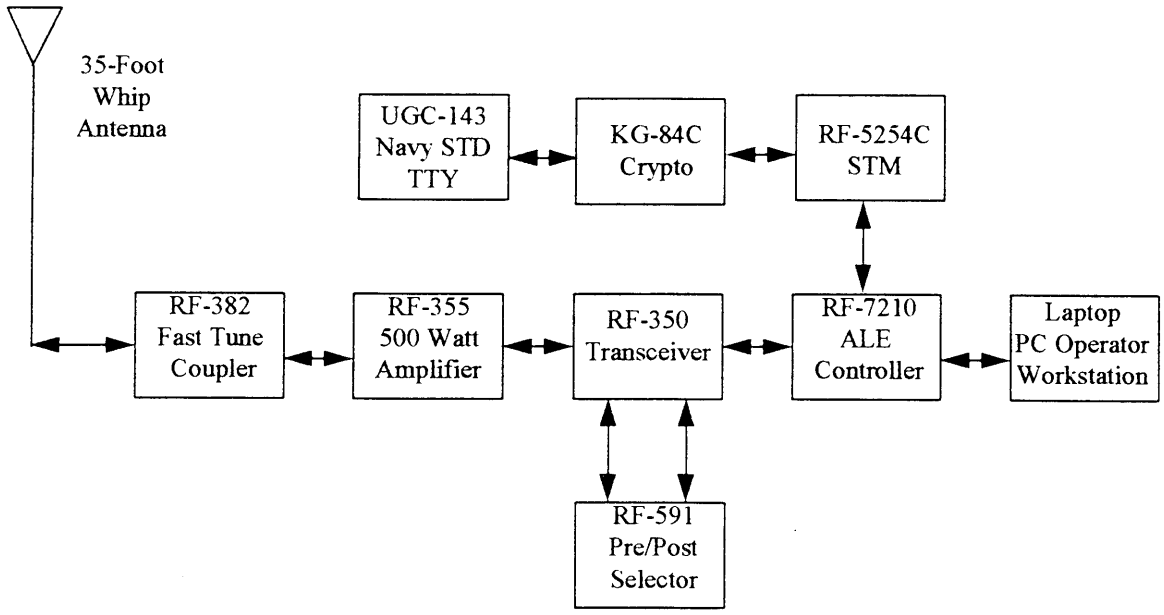

Figure 1-1. USS *Tarawa* ALE equipment configuration.

These demonstrations confirmed that ALE could help solve many of the current HF communications limitations by automatically determining which frequencies are available in the existing propagation environment, automatically establishing connectivity on the best of the allocated frequencies, automatically monitoring the performance of all assigned frequencies, and maintaining a profile on the status of all the available frequencies.

ALE integration into the Fleet could also make contributions to interoperability. The Marine Corps has an ALE capability in the AN/TSC-120, a shelter-mounted mobile communications system that interfaces to the Defense Communications System (DCS) and Automated Digital Information Network (AUTODIN) networks and supports Expeditionary Forces ashore with connectivity to forces afloat. The Army has a similar system, the AN/TSC122, with similar capabilities, and, the Air Force has initiated a full ALE capability in their command center upgrade program (Scope Command) and in Air Mobile Command (AMC) aircraft and ground support sites.

ALE could also have an impact on the way communication plans are designed and the manner in which frequencies are used. Currently, frequencies are assigned to support specific circuits and their

specific services. Multiple HF frequencies are assigned to each HF service to guarantee that there are sufficient frequencies in each portion of the HF spectrum to ensure at least one channel will be available to support forcewide connectivity. With ALE, all frequencies may be considered as resources and assigned to a frequency pool from which ALE can then assign the best frequencies to support services on a prioritized basis. Additionally, with proper coordination and planning, ALE can use one set of exciters to support more than one circuit if circuit usage on both circuits is low and exciter tuning is rapid.

The question to be answered is: “Can the Navy transition HF ALE into the Fleet within current and near-term budget constraints?”

1.2 ALE TRANSITION PLAN

This paper: (1) describes an evolutionary High Frequency (HF) Automatic Link Establishment (ALE) technology transition process that points toward HF 2000 [reference (7)], and (2) delineates a prioritized ALE implementation plan that transitions the Navy to an inter/intra-Battle Group/Amphibious Ready Group ALE capability that meets Joint/Allied ALE interoperability requirements.

SECTION TWO

ALE OPTIONS

2.1 OVERVIEW

ALE implementation is a complex issue that requires multiple considerations before selection of an optimum ALE configuration. In this section, the issues considered include the standards that govern ALE, the impact of antenna patterns and the propagation environment on ALE, and the ALE configurations options.

ALE equipment includes an ALE Modem/Controller (ALEM/C), a scanning receiver, an operator's terminal, and ship radio equipment, including antennas, couplers and transmitters/receivers (Figure 2-1 refers). ALE systems test the RF environment for clear channels by exchanging Link Quality Analysis (LQA) "handshakes." When a useable frequency is found, it automatically establishes connectivity on that frequency. When the net is not being used, or when directed, the ALE receiver scans up to 100 pre-defined channels and exchanges LQA messages with other ALE stations. The result of the "handshake" is given a score and is stored so that if an operating channel becomes unusable, the next best channel (based on score) can be selected and connectivity re-established.

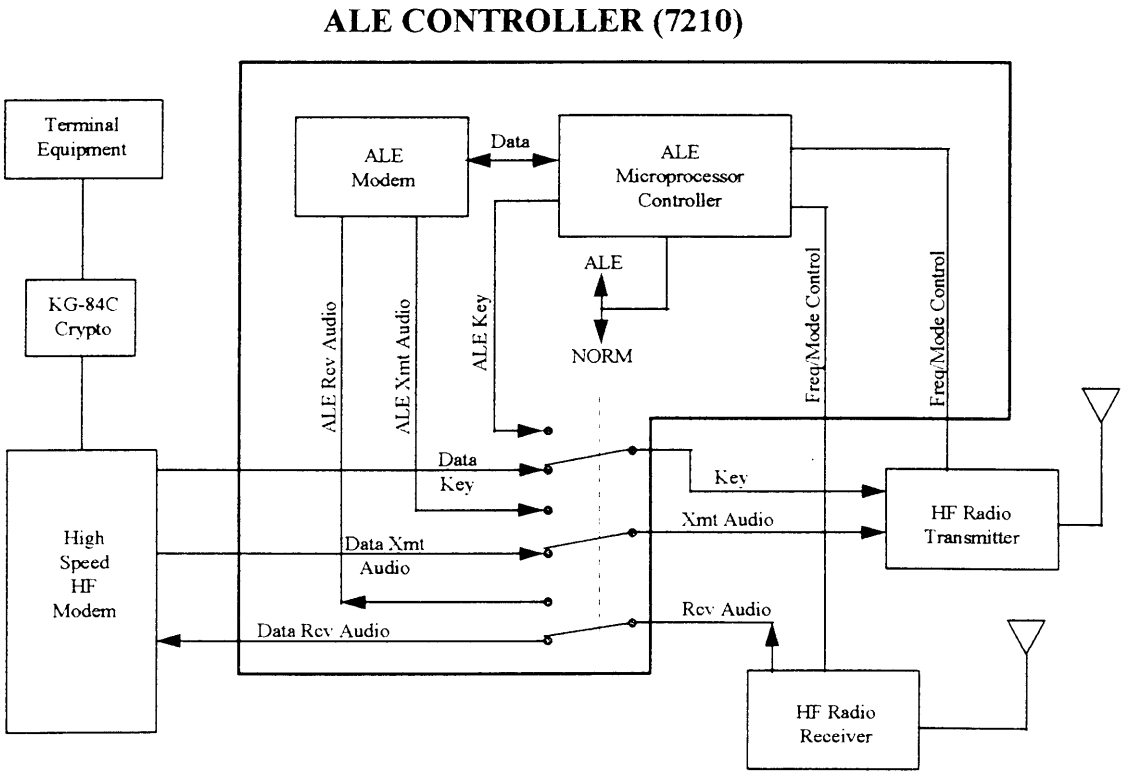

Figure 2-1. ALE modem controller.

2.2 ALE SUPPORT RULES AND TECHNICAL REQUIREMENTS

MIL-STD-188-l41A Appendix A [reference (8)] prescribes a set of basic Rules of Operation for ALE that provides guidelines for the operation of ALE equipment. These rules are technical requirements drivers.

2.2.1 ALE Rules of Operation

ALE Rules of Operation are classified as either “Critical” or “Conditional.” “Critical” rules are those to which an ALE system must adhere to ensure ALE interoperability. “Conditional” rules are those which the operator may incorporate or enforce as dictated by operational necessity.

Rule 1. Independent ALE receiver capability (in parallel with any other)—**CRITICAL.**

Rule 2. Always listens (for ALE signals)—**CRITICAL.**

Rule 3. Always will respond (unless deliberately inhibited)—CONDITIONAL.

Rule 4. Always scanning (if not otherwise in use)—CONDITIONAL.

Rule 5. Will not interfere with active ALE frequency (unless have priority or forced)—CONDITIONAL.

Rule 6. Always will exchange LQA with other stations when requested (unless inhibited), and always measures the signal quality of others—CONDITIONAL.

Rule 7. Will respond in pre-set/directed time slot (net/group/special calls)—CONDITIONAL.

Rule 8. Always seek (unless inhibited) and maintain track of their connectivities with others—CONDITIONAL.

Rule 9. Linking ALE stations employs highest mutual level of capability—CONDITIONAL.

Rule 10. Minimizes time on frequency—CONDITIONAL.

Rule 11. Minimizes power used (as capable)—CONDITIONAL.

2.2.2 Technical Capability Required to Support ALE

To support ALE, the following technical requirements, derived from the above rules, must be met or supported by equipment (e.g., transmitters, receivers, couplers) for MIL-STD-l88-141A ALE compliance:

- An automatic transmitting and receiving capability must be available to support ALE frequency monitoring.
- ALE systems need to be on-line at all times and be in the “listening” mode for incoming LQAs. Failure to be in the listening mode would prevent the system from being alerted to incoming LQAs and to respond to the LQAs, thereby defeating the purpose of ALE.
- As part of being in the listening mode, the ALE receiver must be able to scan the assigned frequencies for the incoming LQAs.
- Upon receipt of an LQA signal, ALE must be able to respond automatically to perform the two-way link analysis.
- Upon response to an LQA signal, two-way link analysis will always be performed unless prohibited.

- To avoid interference with a frequency that is already in use, ALE must ignore the active frequency unless otherwise forced to monitor it or it has a higher priority.
- To minimize the time to respond during an ALE call, the ALE receiver must be remotely tunable to new frequencies for scanning the pre-selected frequencies. The dwell time between the frequencies must be controllable. Transmitters must be remotely tunable to respond on the "calling" frequency.
- Transmitters, receivers, and couplers that support ALE must be tunable at speeds that can meet operational circuit establishment time criteria, which are more stringent than the technical requirements of the MIL-STD. The scanning receiver must be able to support scanning two frequencies per second, minimum, to meet MIL-STD criteria.
- To support LQA responses, transmitter must be rapidly tunable, automatically, to the called frequencies.
- Develop and maintain a database profile of usable frequencies in the ALE modem/controller.
- Consideration must be given to HF transmission characteristics, existing equipment configurations, equipment compatibility requirements, and interoperability requirements.

2.3 HF TRANSMISSION CHARACTERISTICS

HF transmission characteristics must be considered when assessing ALE options, e.g. the transmitting environment, the time of day, the East-West distance between communicating stations, the frequency channels allocated to the circuit, and the platform HF communications equipment configurations, including the antenna placement. The most critical to ALE are the relationship between frequency and antenna radiation patterns, and the effects of the environment on HF propagation.

2.3.1 Frequency and Antenna Radiation Patterns

Antenna radiation patterns are areas in space where energy is radiated from an antenna. An antenna's coverage is a function of frequency, location, and the physical environment around it. As the frequency of transmission is lowered, the angle of transmission increases. As a result, identical antennas transmitting at different frequencies will create different antenna radiation patterns. Figure 2-2(A) shows the same antenna operating at two different frequencies.

The physical topography of the area in which an antenna is mounted also plays an important role in antenna radiation patterns. Physical structures in the vicinity of the antenna and the height of the antenna above the surface will cause interference patterns to form lobes and nulls in the antenna coverage. Antenna coverage can be modified by the reflections from the ocean and the superstructure in the antennas vicinity. Other factors that affect the radiation patterns include the antenna orientation (polarization), the groundplane material and the surface over which the signal is radiated. Salt water presents the best surface for groundwave coverage, while dry sand and rocks are the worst surface to extend coverage across.

Two different antennas operating at the same frequency but from different physical locations will create different antenna radiation patterns due to the differences in physical structures in the vicinity of the antenna . Figure 2-2(B) shows two different antennas on the same ship with their radiation patterns for the same operating frequency.

Same Antenna for Two Different Frequencies

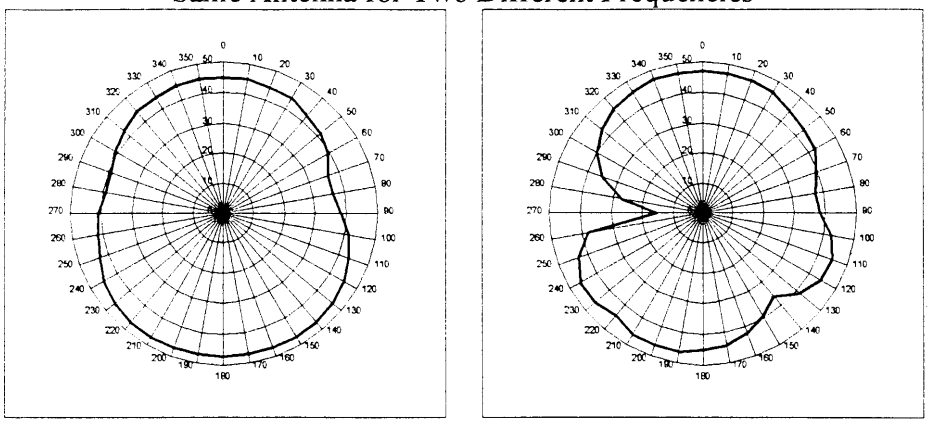

Antenna 1 Frequency A Antenna 1 Frequency B

Figure 2-2. (A) Antenna radiation patterns.

Same Frequency for Two Different Antennas

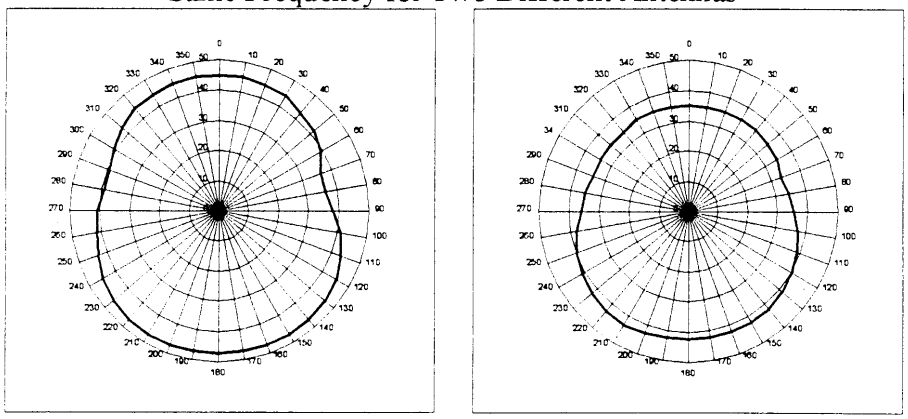

Antenna 1 Frequency A Antenna 2 Frequency A

Figure 2-2. (B) Antenna radiation patterns.

These diagrams illustrate the effects of antenna radiation patterns and the relationship between antenna properties and frequencies. For ALE to function effectively, it is preferable to use the same antenna for establishing connectivity and communications.

2.3.2 Environmental Factors Affecting HF Skywave Propagation

Some environmental conditions are predictable and occur on a periodic basis, e.g., changing ionospheric layer; while others occur in a random manner. The effects of these conditions may vary from the originating point to the endpoint as well as anywhere in between. Any changes in these conditions affect the HF communications path between users. Although these factors are not controllable, they must be taken into account when attempting to establish communications connectivity. The following are some of major environmental factors that affect HF skywave propagation:

- Ionosphere Layer: Ionosphere layers are layers in the atmosphere, between 100 and 400 kilometers (km) above the earth, where gases are ionized. These layers of ionized gases refract the HF skywaves back to earth. The condition of the layers are greatly dependent on the time of day and the seasons. During daylight hours, the layers are ionized by the sun and strengthen; while at night, the layers settle to lower altitudes, weaken, and in some cases disappear completely. This results in fading, absorption, and erratic signal propagation.

- Sunspot Activity: Sunspot activity affects HF propagation over long haul and Near VerticalIncidence Skywave (NVIS) paths by changing ionization of the various ionization layers. This makes the paths very frequency-sensitive, which results in a requirement for more frequent frequency shifts.
- Sudden Ionosphere Disturbances (SIDs): SIDs and magnetic storms both cause skywave propagation disturbances and raise background "noise" levels, as well as affecting the ionization layers. SIDs can cause some HF paths to drop out completely without warning for a period of time.

All of these various factors complicate establishing and maintaining HF connectivity between platforms. For any given group of frequencies, there will be a full range of usable to unusable frequencies. Thus, to ensure prompt connectivity, there must be some means of determining which frequencies are usable at any given time. Traditionally, operator experience filled that void, but a more reliable method, e.g., Communications Decision Aids (CDAs), needs to be in place to support inexperienced operators. Additionally, although ALE can help in selecting frequencies, if operation involves passing off a frequency to another antenna, it can affect the usefulness of the selected frequency.

2.4 ALE OPTIONS (1-4)

NRaD Technical Document (TD) 2575, "Shipboard Implementation and Concept of Operations for Automatic Link Establishment," [reference (9)], identifies four categories of options as potential equipment configurations for implementing an HF ALE capability in the Fleet. These options are identified based on the degree of integration with existing components or future HF communication equipments:

1. **Automatic ALE Transceiver Subsystem**: This is a stand-alone configuration that includes adding an automatic transceiver, automatic antenna coupler ALE modem/controller (ALEM/C), and operator's terminal to existing shipboard HF equipment and using an existing 35-foot whip antenna.
2. **ALE Modem/Controller:** This option integrates an ALEM/C and operator's terminal into the existing shipboard HF equipment. This option seeks to integrate ALE with manually tuned equipments (e.g., transmitters and couplers) while proposing only minimal changes to existing communications configurations.
3. **Broadband Receiving Subsystem:** This option utilizes a broadband receiving subsystem with integrated receiver or a broadband like configuration such as that of the AN/SRA-49 multicoupler where there are a number of pre-tuned port on the multicoupler. This option adds scanning receiver(s), ALEM/C(s), and operator's terminal(s). There are five different configurations that comprise this option, each differing in the manner in which the receivers and modem/controller are integrated into the receiving subsystem. The transmitting side of this option is characterized by manually tuned transmitters.
4. **Broadband System:** This option utilizes a full broadband system to support ALE functions. This option integrates the ALEM/C into the system controller to remotely control the broadband transmitting subsystem and the broadband receiving subsystem. This option would also be the result of adding a broadband transmitting subsystem to the broadband receiving subsystem with an ALE capability such as the one identified for Option 3.

NRaD Document No. 826-D003-94, "RF ALE Distribution" [reference (10)], documents tests of one of the most promising variations of the broadband receiving subsystem options identified in TD-2575 and offers an additional equipment configuration with similar operational characteristics.

In all cases, these equipment configurations use common fleet equipment, with minor modifications (see Appendix D). Each of these options, with variation, are presented in the following paragraphs, with advantages and disadvantage noted.

2.4.1 Option 1: Automatic ALE Transceiver Subsystem

Option 1 uses an automatic ALE transceiver subsystem with an automatic antenna coupler, an existing ship whip antenna, an ALEM/C, and an operator's terminal. This configuration provides full ALE capability to one circuit, or it could also be used to support multiple services by connecting to the modem through a switch matrix to select a communication service. In the latter case, the configuration can operate as a stand-alone frequency monitor to provide guidance on the availability of connectivity on allocated HF frequencies, though connectivity is not assured due to differences in antenna patterns. In either case, the ALE functionally supports only one circuit at a time. (Figure 2-3 illustrates Option 1.)

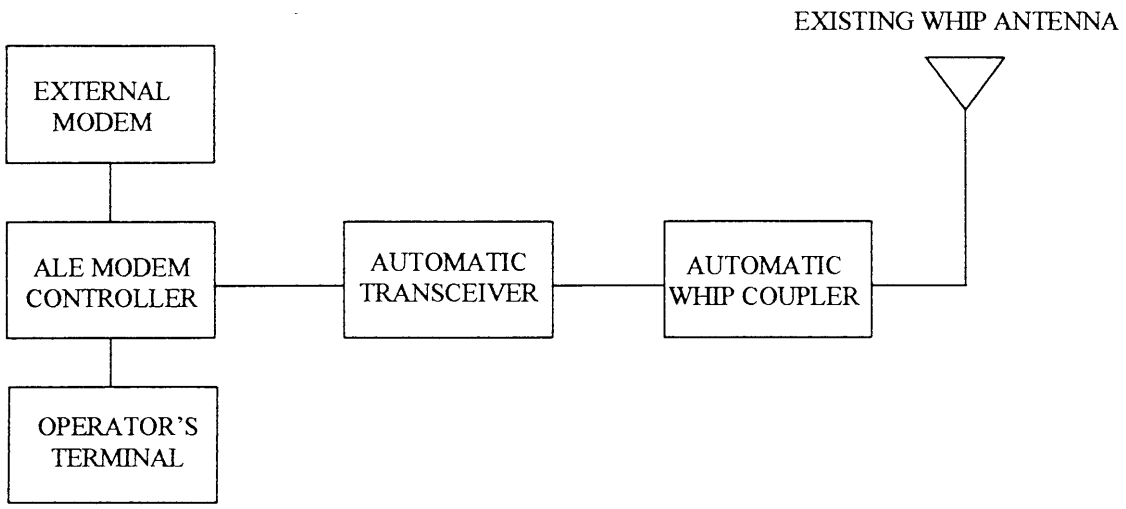

Figure 2-3. Option 1 automatic ALE transceiver.

Advantages:

- Provides a full ALE capability.
- Has minimal impact on the existing HF communications suite.
- Can be integrated into an HF communications suite and provide the ALE capability for one communications circuit.

Disadvantages:

- When providing frequency selection guidance for other circuits, the differences in antenna patterns may negate connectivity.
- Not a typical shipboard installation. Could result in electromagnetic interference (EMI) to the receive side of a circuit.
- Antenna patterns are inferior to those of the broadband antennas.
- Supports only one circuit at a time.

2.4.2 Option 2: ALE Modem/Controller

Option 2 integrates an ALE subsystem with a narrowband receiving multicoupler and a transmitter. This option uses an ALE modem/controller that is supported by a multicoupler such as an AN/SRA-49 with pre-selected frequencies, a transmit switching matrix, and manually tuned transmitters. It is designed to scan a single pre-selected frequency for LQA signals. As such, a single port of the multicoupler, the receiver, and the transmitter are pre-tuned to a specific frequency. In order to detect an ALE LQA signal, an ALE modem/controller uses a receiver to scan the pre-selected frequency from the assigned port in the multicoupler. Upon receipt of an LQA signal, the operator terminal registers an alert of a link attempt for a given frequency. The ALEM/C responds to the LQA signal with the pre-tuned transmitter on that preselected frequency. This option, like Option 1, will support only one circuit at a time. (Figure 2-4 illustrates Option 2.)

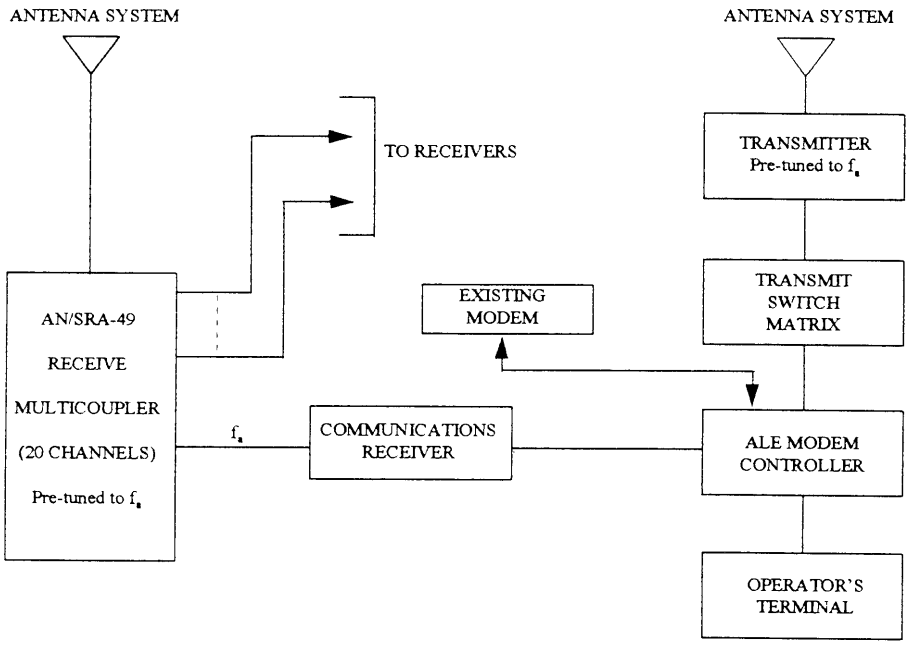

Figure 2-4. Option 2 ALE modem/controller.

Advantages:

- Provides a limited ALE capability for a particular communication circuit.
- Has minimal impact on existing HF communications suite.
- Uses same antennas for ALE and communications circuits.
- Has minimum cost for an ALE capability.

Disadvantages:

- Limited to scanning only one frequency for LQA signals.
- Takes considerable time, in the order of minutes to possibly tens of minutes, to evaluate several possible frequencies for a communication circuit or circuits due to the requirement to retune or repatch the multicoupler, as well as manually tune the transmitter.
- Firmware modification may be required for some vendors' ALEM/C equipment.

2.4.3 Option 3: Broad band Receiving Subsystem (with variations A - E)

Option 3 utilizes a broadband or a broadband-like receive capability to support ALE. There are five possible configurations for this option. The first three configurations can be achieved by providing an ALE scanning receiver access to the 20 pre-tuned frequencies of the AN/SRA-49 receiving multi-coupler, which functions as a pre-selector. The fourth configuration uses a broadband receiving sub-system (similar to the subsystem incorporated into the AN/URC109 or the AN/URC-13 1) in place of, or in addition to, the existing receiving subsystem. The fifth configuration uses an AN/SRA-49 multicoupler and an RF pre-selector such as the RF-59 l for providing the signal input to the scanning receiver. All configurations require an ALEM/C and an operator's terminal, a scanning receiver, and a manual transmit subsystem for link establishment.

2.4.3.1 Option 3A of Broadband Receiving Subsystem. Option 3A uses an ALE modem/controller supported by a multicoupler such as a AN/SRA-49 with multiple channel outputs, dividers, a switching matrix, and manually tuned transmitters. The scanning receiver scans the output of the pre-tuned multicoupler ports via the switched matrix to detect an LQA signal. Upon receipt of an LQA signal, the operator terminal registers an alert for the "called" frequency. The operator must then select an available transmitter via the transmit switch matrix and manually tune the transmitter to the proper frequency to respond to the LQA signal the next time it cycles around. (Figure 2-5 illustrates Option 3A.)

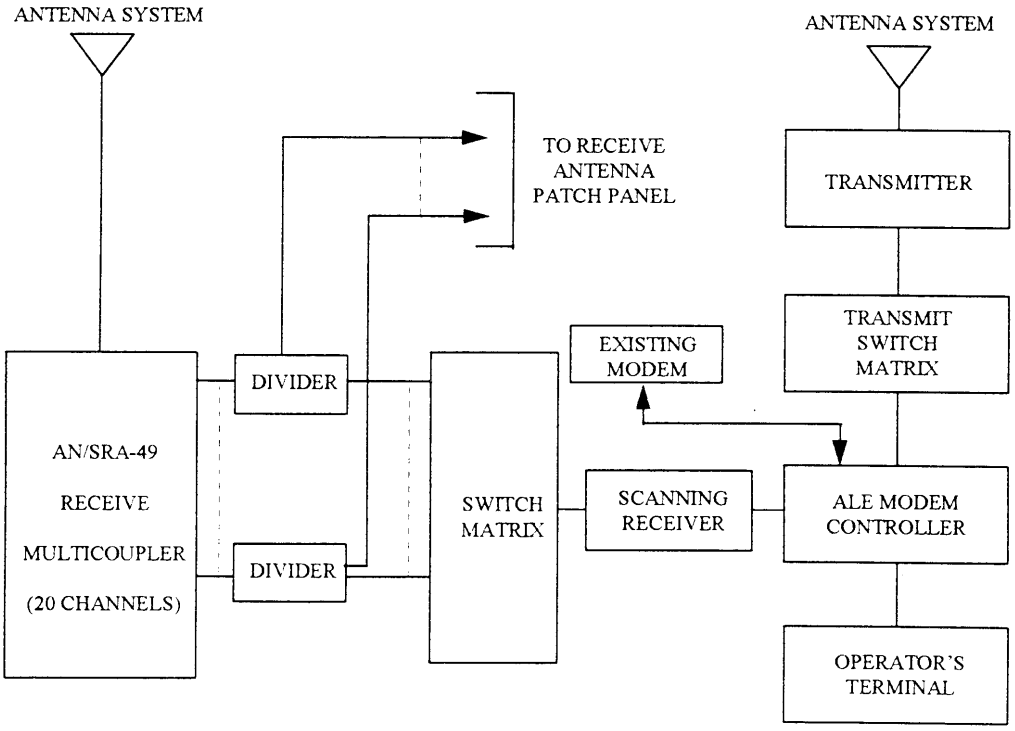

Figure 2-5. Option 3A broadband receiving subsystem.

2.4.3.2 Option 3B of Broadband Receiving Subsystem. Option 3B uses an ALE modem/controller supported by a multicoupler such as the AN/SRA-49, with multiple channel outputs, a combiner, a receiver multicoupler, and manually tuned transmitters. An ALE modem/controller uses a remotely-controllable scanning receiver to detect an LQA handshake request from a pre-tuned frequency in the multicoupler. The multicoupler ports' outputs are multiplexed by the combiner. The

multiplexed signal is passed on to the scanning receiver where it can monitor all of the pre-selected frequencies from only one port. The multiplexed signal is also available at the receiver multicoupler patch panel for routing of active circuits to receivers for signal processing. Upon receipt of an LQA signal, the operator terminal registers an alert of a link attempt for a given frequency. The operator is then required to select a transmitter via the transmit switch matrix and manually tune the transmitter to the proper frequency to respond to the LQA signal the next time that it cycles around. (Figure 2-6 illustrates Option 3B.)

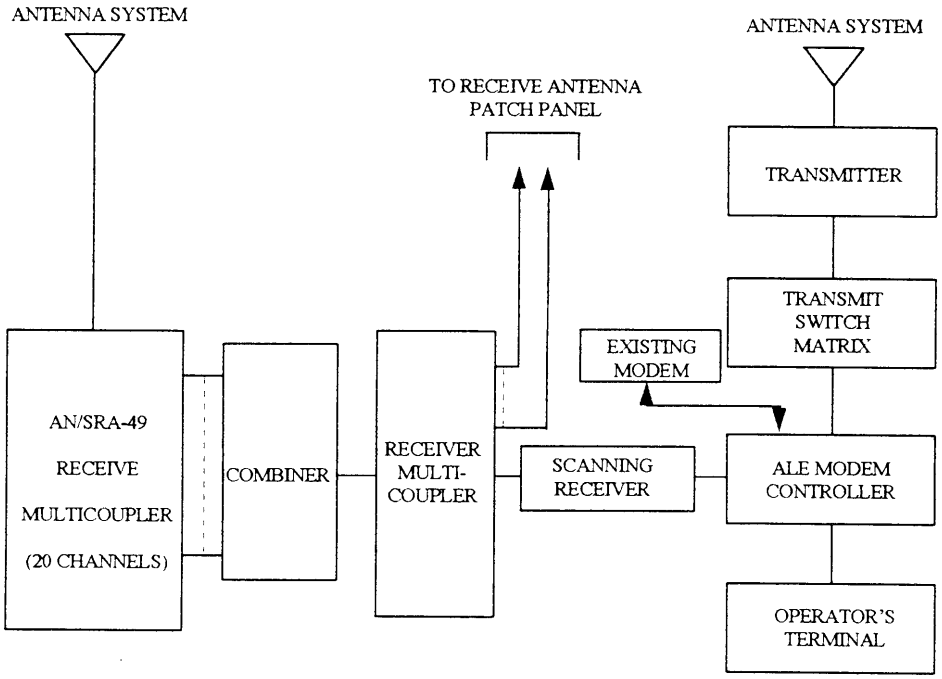

Figure 2-6. Option 3B broadband receiving subsystem.

2.4.3.3 Option 3C of Broadband Receiving Subsystem. Option 3 C uses an ALE modem/controller supported by a multicoupler such as the AN/SRA-49, dividers, a combiner, a scanning receiver, and manually tuned transmitters. This configuration is a combination of Options 3A and 3B. In order for an ALE modem/controller to scan the frequency spectrum for an LQA signal, an ALE modem/controller uses a remotely-controllable scanning receiver. An incoming LQA signal is routed through a pre-tuned port in the multicoupler and is split by the divider to go to receivers and the combiner. The combiner multiplexes all of the incoming signals to a single signal, which is passed on to the scanning receiver where it can monitor all the of pre-selected frequencies from only one port. Upon receipt of an LQA signal, the operator terminal registers an alert of a link attempt for a given frequency. The operator selects a transmitter via the transmit switch matrix and manually tunes the transmitter to the proper frequency to respond to the LQA signal the next time that it cycles around. (Figure 2-7 illustrates Option 3C.)

2.4.3.4 Option 3D of Broadband Receiving Subsystem. Option 3D uses an ALE modem/controller that is supported by a broadband antenna matching unit, a broadband receiver multicoupler, a receive antenna matrix, a scanning receiver, and manually tuned transmitters. In order for an ALE modem/controller to scan the frequency spectrum for an LQA signal, an ALE modem/controller uses a remotely controllable scanning receiver. An incoming LQA signal is passed from the broadband antenna matching unit and the broadband receiver multicoupler to the receive antenna matrix. The

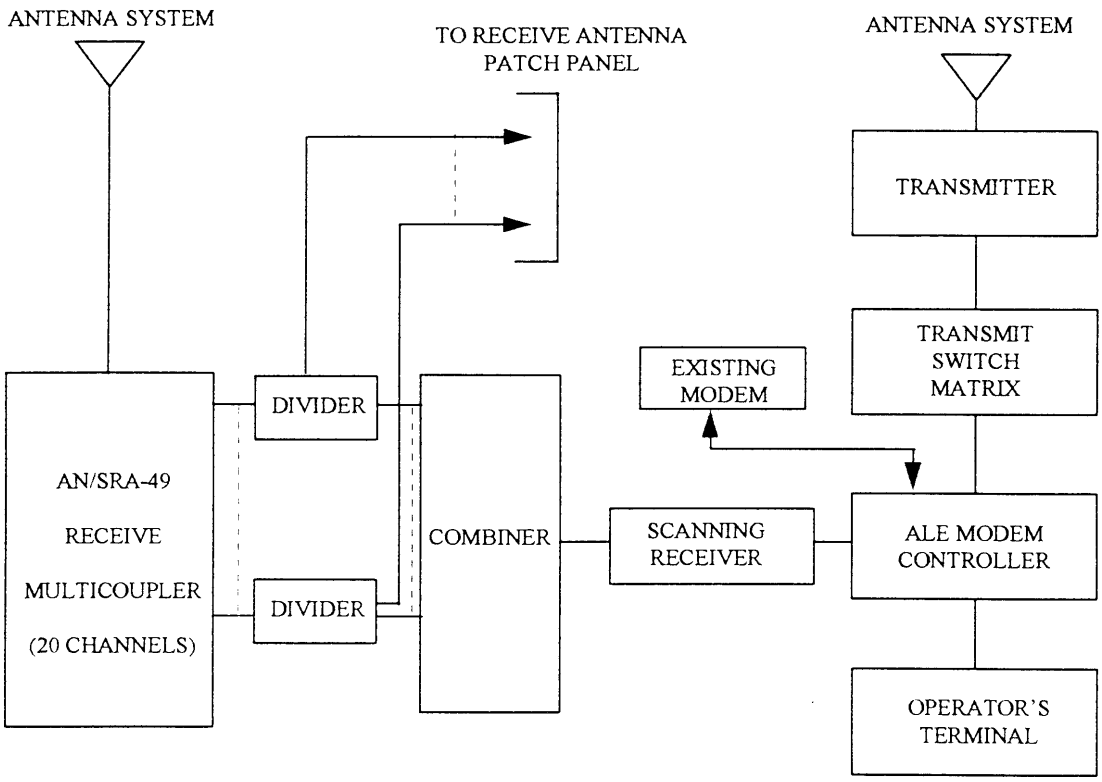

Figure 2-7. Option 3C broadband receiving subsystem.

matrix splits the signal to go to the scanning receivers and other receivers. Upon receipt of an LQA signal, the operator terminal registers an alert of a link attempt for a given frequency. The operator is then required to select an available transmitter via the transmit switch matrix and manually tune the transmitter to the proper frequency to respond to the LQA signal the next time that it cycles around. (Figure 2-8 illustrates Option 3D.)

2.4.3.5 Option 3E of Broadband Receiving Subsystem. Option 3E uses an ALE modem/controller supported by a multicoupler such as an AN/SRA-49, an RF pre-selector controlled by a scanning receiver, and manually tuned transmitters. The AN/SRA-49 combiner provides a broadband signal to the RF pre-selector. The scanning receiver directs the RF pre-selector to tune to the selected frequencies as it searches for LQA handshake signals. Upon receipt of an LQA signal, the operator terminal registers an alert of a link attempt for a given frequency. The operator selects an available transmitter via the transmit switch matrix and manually tunes the transmitter to the frequency to respond to the LQA signal the next time that it cycles around. (Figure 2-9 illustrates Option 3E.)

All Option 3 configurations have similar advantages and disadvantages. The differences between configurations 3A, 3B, and 3C, and configurations 3D and 3E are primarily the differences in which frequencies are made available to the scanning receiver. Options 3D and 3E are unlimited in frequencies to scan, while Options 3A/3B/3C are limited to the 20 frequencies pre-tuned on the SRA-49 receiver multicoupler. On the transmit side, all configurations experience the same limitations as the result of the manually tuned transmitter.

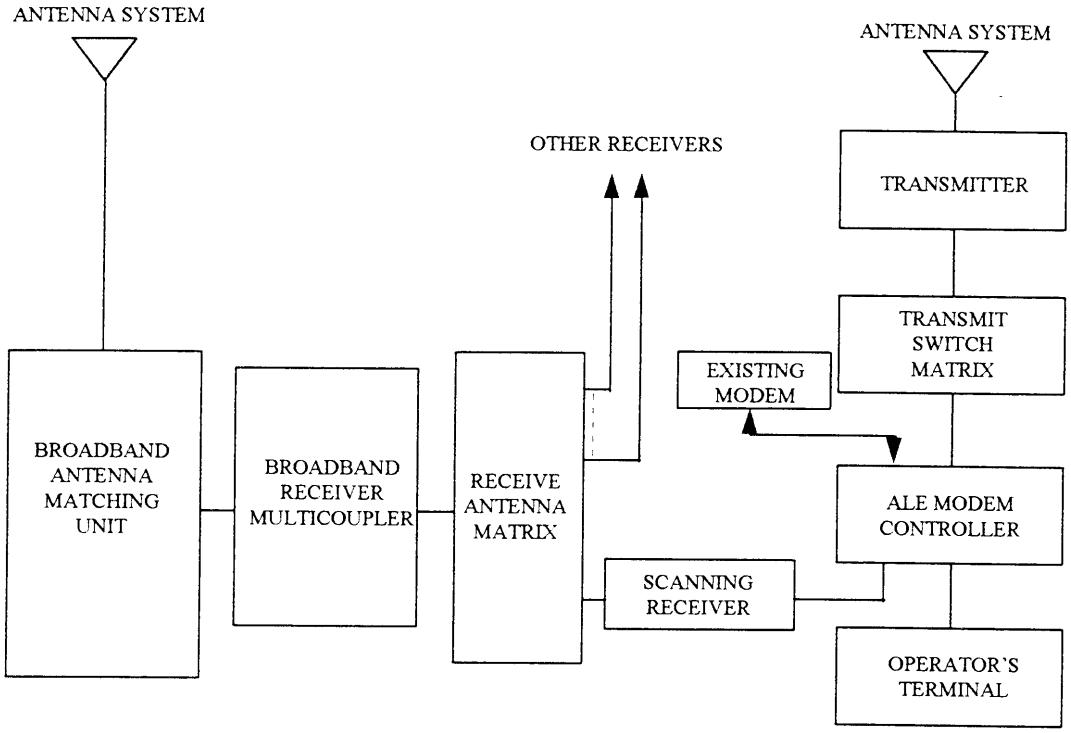

Figure 2-8. Option 3D broadband receiving subsystem.

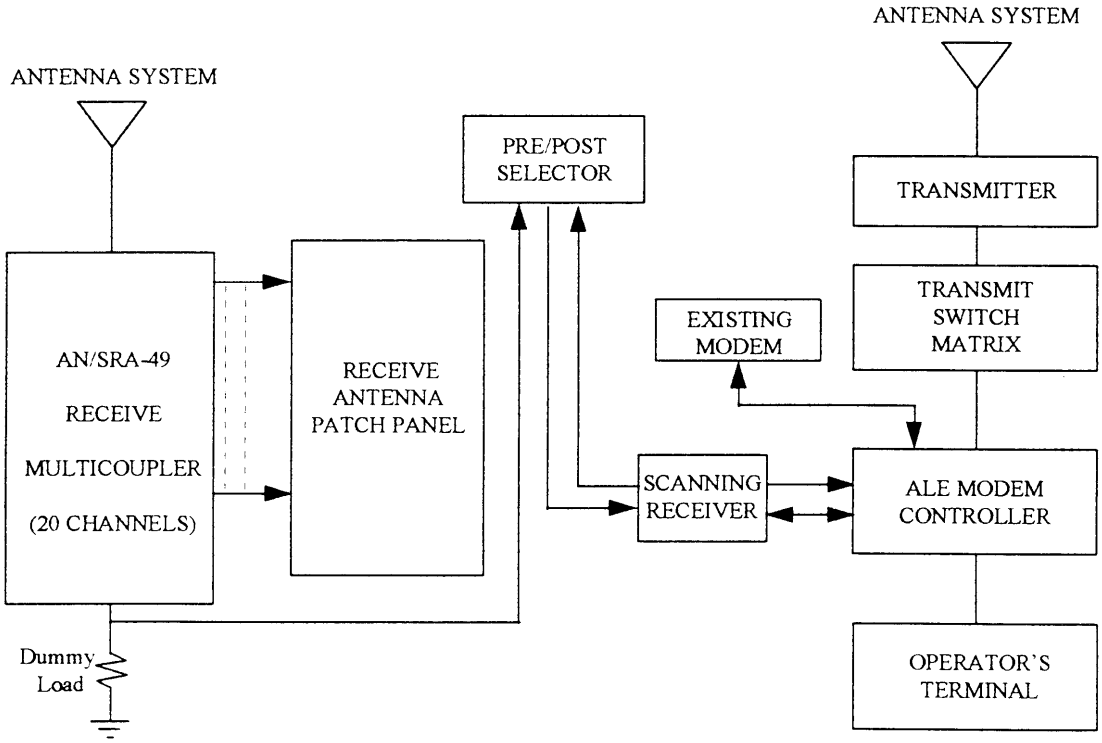

Figure 2-9. Option 3D broadband receiving subsystem.

Advantages:

- Provides a limited compatible ALE capability for a particular communication circuit. (Options 3A through 3E).
- Scans several frequencies listening for calls (Options 3A through 3E).
- Uses same antennas for ALE and communication service; hence, the use of ALE for frequency guidance to hand-off circuits to other receivers and transmitters can be done with a high degree of reliability for connectivity (Options 3A through 3E).
- Frequency constraint is eliminated when using Option 3D and 3E (Figures 2-7 and 2-8).

Disadvantages:

- Number and distribution of frequencies limited by the AN/SRA-49 (for Options 3A, 3B, and 3C).
- Slow response to LQA calls unless transmit subsystem is pre-tuned to the interrogated frequency (Options 3A through 3E).
- Potential EMI problems with Option 3D on small platforms.
- Firmware modification may be required for some ALEM/C equipment if the existing modems/controllers are not designed to operate with a manual tuning transmit subsystem (Options 3A through 3E).

2.4.4 Option 4: Broadband System

This option requires integrating ALE with both a broadband receiving subsystem and a broadband transmitting subsystem. This results in a full broadband system that is unconstrained by any mechanically tuned devices. This option is an upgradeable option from Option 3D. (Figure 2-10 shows a typical broadband system configuration.)

Advantages:

- Fully compatible with ALE MIL-STD-188-141A.
- Supports Joint interoperability.
- Upgradeable from Option 3D.

Disadvantages:

- Expensive to do as evolutionary approach for existing ships.

2.5 ALE OPTIONS EVALUATION

Analysis of the four major options discussed results in selecting Options 1, 3D, 3E, and Option 4 for further analysis. Options 2 and 3A/B/C are discarded for the following reasons:

Option 2 (Modem Controller Option) is limited to supporting only one narrowband HF circuit on a single frequency and cannot scan for LQA signals while in use. If it is required to evaluate several frequencies it would take considerable time, e.g., in the order of minutes to possibly tens of minutes. The transmitter and receiver require manual tuning to answer call-ups.

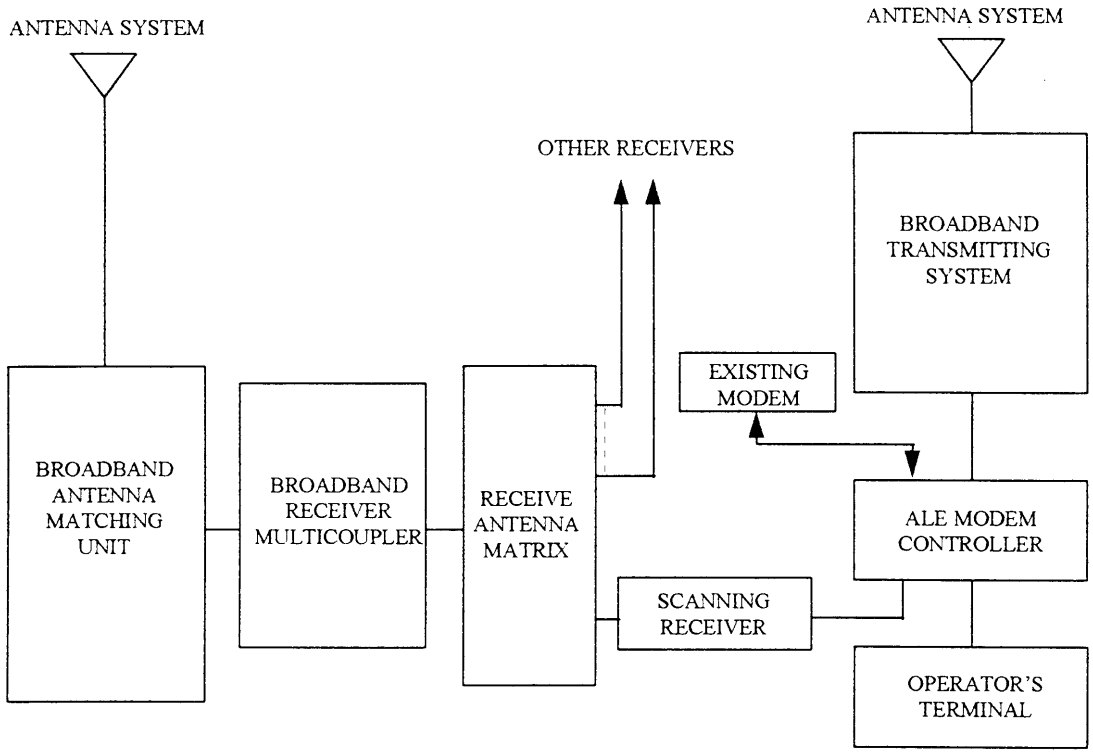

Figure 2-10. Option 3D broadband receiving subsystem.

The system s frequency selection can be determined by using such aids as a Computer Decision Aid (CDA) or pre-coordination with the "master station." Once tuned to the new frequency, when an LQA handshake is heard, connectivity establishment is fully automatic.

Option 2 cannot support Rule 4 to keep scanning due to the fixed frequency on the port of the multicoupler and on the receiver. It would only have a limited capability with regard to Rules 6 through 9. However, Option 2 is upgradeable to an Option 3 by adding a switch matrix and a scanning receiver capability. But the additional expenditure of time and resources cannot justify the limited capability gained by first going to Option 2. It would be cheaper to go straight to one of the Option 3 configurations.

Though this option could support a limited set of services with ALE, it is not cost effective to install this option to achieve such a limited capability that is not upgradeable to a more complete ALE capability without major equipment replacements and costs.

Options 3A/B/C (Broadband Receiving Subsystem) uses a broadband or a broadband-like receive capability to support ALE. Options 3A/B/C are various combinations of equipment (power splitters [dividers], combiners, switches and multicouplers with amplifiers) to providing a limited capability to support narrowband link establishment for one service, while providing LQA information for up to 19 other frequencies when the net is not in use. The use of the AN/SRA-49 receive multicoupler as a pre-selector is the key to the 20 channel receiver scan capability. Hence, these three configurations are limited to the 20 frequencies pre-tuned on the AN/SRA-49 multicoupler, including the frequencies in use and not to be scanned. This is not flexible enough to warrant selection of this option.

An engineering analysis of Options 3A/B/C was conducted [reference (9)] to determine the best equipment configuration, including which amplifier would provide the best ALE capability. Of these

configurations, Option 3B-2, a variation of Option 3B that uses a 20 db preamplifier in line between the combiner and the receive multicoupler, provided an acceptable combined noise figure and dynamic range value for narrowband systems.

The trade-off in using one of Options 3A/B/C is that although they can meet the monitoring requirements, these systems still require manually tuning transmitters to the frequency on which the call-up is recognized. Although manually tuned transmitters would meet the technical requirements of the MIL-STD, operationally this may not meet the Commander's requirements without providing workarounds.

2.5.1 Supporting Rules of Operation

Table 2-1 summarizes the selected options/configurations' ability to meet the operational requirements set forth by the Rules of Operations. Option 4 is the only option which will meet the full range of rules stated by MIL-STD-188-141A.

Table 2-1. Operational rules for ALE.

	RULES OF OPERATION (MIL-STD-188-144A)	Option 1	Option 3D	Option 3E	Option 4
1	Independent ALE receiver capability (in parallel with any other) -- **CRITICAL**	X	X	X	X
2	Always listens (for ALE signals) -- **CRITICAL**	X	X	X	X
3	Always will respond (unless deliberately inhibited) -- CONDITIONAL	X	X*	X*	X
4	Always scanning (if not otherwise in use) -- CONDITIONAL	X	X	X	X
5	Will not interfere with active ALE channel (unless have priority or forced) -- CONDITIONAL				X
6	Always will exchange LQA with other stations when requested (unless inhibited), and always measures the signal quality of others -- CONDITIONAL	X			X
7	Will respond in pre-set/directed time slot (net/group/special calls) -- CONDITIONAL	X			X
8	Always seek (unless inhibited) and maintain track of their connectivities with others -- CONDITIONAL				X
9	Linking ALE stations employs highest mutual level of capability -- CONDITIONAL	X			X
10	Minimizes time on channel -- CONDITIONAL	X			X
11	Minimizes power used (as capable) -- CONDITIONAL	?	?	?	X

* These configurations would be slow due to the manual transmitter tuning.

On the surface, Option 1 appears to be the second best option. However, it can only support one circuit at a time, and does not meet "critical" Rule 2. Option 3 was deficient due to its inability to meet time requirements for responding to a link call-up and establishing the link.

By using a dedicated scanning receiver remotely controllable by the ALE modem/controller, all options/configurations meet the critical requirements for Rule 1. Under Options 1 and 3, if the scanning receiver is being used for a circuit, then the receiver may not meet the critical requirements for Rule 2. But if this ALE capability is used to provide frequency guidance to other receivers, then the scanning receiver can "always listen", satisfying Rule 2.

2.5.2 Meeting Technical Requirements

Table 2-2 reflects the options' ability to meet the technical requirements necessary for full ALE operation. Again, it is apparent that Option 4 is the only option that meets the full technical

Table 2-2. Technical requirements for ALE.

Technical Requirements	Option 1	Option 3D	Option 3E	Option 4
An independent transmitting and receiving capability to support frequency monitoring.				X
ALE receiver needs to be on-line at all times and be in the "listening" mode for incoming LQAs.	X**	X	X	X
ALE receiver must be able to scanning the assigned frequencies for the incoming LQAs.	X**	X	X	X
System must be able to respond automatically to perform the two-way link analysis.	X**			X
Perform two-way link analysis unless prohibited.	X	X	X	X
ALE receiver must be remotely controllable for tuning to new frequencies.	X	X	X	X
Scanning receiver must have a dwell time that can support scanning two frequencies/second or five frequencies/second.	X	X	X	X
Avoid interference with active frequencies unless otherwise forced by higher priority.				X
Transmitter must be remotely tunable to new frequencies to support the LQA response.	X			X
Develop and maintain a profile of usable frequencies.	X	X	X	X
Fast tuning couplers to support narrowband tunable transmitters and receivers.	X			N/A
Broadband antenna system to support broadband receiving systems.		X	X	X
Broadband antenna system to support broadband transmitting systems.				X

** Will support as an ALE function or a single circuit, but not both.

requirements for ALE operations. Option 1 was evaluated on its ability as a standalone ALE system. The weaknesses of the various systems under Option 3 are due to their inability to meet time requirements because of the manually tuned transmitters.

2.5.3 Capabilities and Benefits

As part of the analysis for cost-effectiveness, it was necessary to evaluate the capabilities and benefits gained from each of the options/configurations since each will provide the warfighter with a varying degree of ALE capability. These options were evaluated based on two separate methods of operations: (1) operating as a fully integrated ALE, and (2) operating as a system for providing frequency guidance to other circuits. Table 2-3 summarizes the capabilities and benefits gained by incorporating each option under each method of operation. Again, Option 4 is the only system that provides the full range of capabilities gained by ALE operations. Option 1 could function as an integrated ALE system but could not support other systems. The various systems under Option 3 provided limited capability, and correspondingly, limited benefits.

Table 2-3. Technical requirements for ALE.

Capabilities/Benefits as Integrated System	Option 1*	Option 3D	Option 3E	Option 4
Full ALE compatibility	X			X
Scans several frequencies listening for calls	X	X	X	X
Supports multiple circuits		X	X	X
Fully automated system	X			X
Has minimal impact on existing systems	X			X
Unconstrained in frequency selection	X	X	X	X
Uses same antennas for ALE and communication service	X	X	X	X
Rapid circuit re-establishment	X			X
Cost for capability	M	L/M	L	H
Capabilities/Benefits as Frequency Guidance				
Limited ALE compatibility		X	X	
Can provide frequency selection guidance to various services		X	X	X
Capable of passing off established link to another circuit while maintaining scanning capability		X	X	X
Supports multiple circuits		X	X	X
Uses same antennas for ALE and communication service	X	X	X	X
Rapid circuit re-establishment	X			X

* Will support technical requirements only when using ALE as a stand-alone system to support a single service.

Legend:

Relative cost: (Option 3D cost depends upon the broadband receiving equipment selected.)

L = Low cost M = Medium cost

H = High cost

2.5.4 Option Limitations

Table 2-4 summarizes the limitations of each option/configuration in terms of how the ALE will be implemented, how it is used in the context of services and degree of integration, and cost. Option 4's most significant limitation is the cost of investment for a full broadband system. Option 1 and the various systems under Option 3 all have varying degrees of limitations for true ALE performance.

Table 2-4. Limitations of ALE options.

Limitations	Option 1	Option 3D	Option 3E	Option 4
Limited ALE capability.		X	X	
Full ALE compatibility only for one given service at a time.	X			
Required manual intervention for switching and equipment tuning.		X	X	
Either scans for LQA call-up or support a service at any given time, but not simultaneously.	X			
Slow circuit re-establishment.		X	X	
Not a typical shipboard installation and could result in electromagnetic interference (EMI) to the receive side of a circuit.	X			
Potential EMI problems if improperly designed or operated.				X
Differences in antenna patterns will produce varying/differing results in LQA analysis or negate the frequency selection for other systems.	X			
Number and distribution of frequencies limited by the AN/SRA-49 (for Options 3A, 3B, and 3C).				
Slow response to call unless transmit subsystem is pre-tuned.		X	X	
Requires new equipment to be integrated or major systems improvements/upgrades.	X	X	X	X
Expensive to do as evolutionary approach for existing ships.		X*		X

* Expensive when adding the full broadband transmit subsystem.

2.6 OPTION TRADE-OFFS

For any given option for the various ALE configurations, there are trade-offs for the capabilities and benefits gained. These trade-offs are in operational capability, technical interoperability, system upgradeability, and fiscal commitment. This section evaluates the four options individually. Because of the limitations of Options 2 and 3A/3B/3C preclude them as viable alternatives for introducing an ALE capability to the Fleet, these options/configurations will not be part of the discussions of option trade-offs.

2.6.1 Option 1 Trade-Offs

Option 1 is the Automatic ALE Transceiver Subsystem, using the ALE capability for supporting one circuit with scanning and monitoring functions. This option represents a typical stand-alone system in a half-duplex configuration and will not support any communication services requiring full-duplex circuits. As an immediate solution, this option provides the quickest means to a full ALE capability in the Fleet, with both automatic receive and transmit at the least cost.

The trade-off is that this option cannot provide reliable frequency selection to other communications systems/subsystems due to differences in antenna radiation patterns, and would not be upgradeable to a more complete ALE capability without major equipment replacement and the attendant fiscal investment costs.

In terms of operational acceptability, the availability of an ALE capable system on each platform would provide the Officer-in-Tactical-Command (OTC) with options currently not available, varying

from providing ALE for a high priority service, to monitoring the environment in support of other services, albeit, one at a time.

2.6.2 Option 3 Trade-Offs

Option 3, the ALE Broadband Receiving Subsystem, is a set of configurations that best provide a starting point for evolving ALE into the fleet. All configurations in this option can support a minimum fleet introduction capability.

Option 3D meets all ALE receiving criteria with the broadband antenna system and the receiver multicoupler. It provides the best ALE receive capability because it is not limited to the 20 pre-tuned frequencies of the AN/SRA-49. Further, this option is expandable to support broadband transmit capability, making it a viable option IF the funding is identified to upgrade the transmit side to a full broadband system. If the upgrade to a full broadband system is not planned, this option is too costly for such little advantage over the other Option 3 configurations, either technically or operationally.

Option 3E, similar to Option 3D, provides limited capability to support narrowband link establishment for one service by using a pre-selector independent of the receiving antenna multicoupler. It is not limited to the 20 pre-tuned frequencies of the multicoupler, since it does not take signal inputs from the AN/SRA-49's 20 pre-tuned ports. This option does use manually tuned transmitters. However, this option is better than Options 3A/B/C due to a better performance and lower cost for initial investment. From a fiscal perspective, Option 3E provides better performance for a lesser investment cost. It is less costly than Option 3D, but does not provide the broadband upgradeability that Option 3D provides.

There are several possible procedural alternatives to work around the limitations of the manually tuned transmitter in Option 3 and thereby reduce LQA response times. While these alternatives may be useful in assisting the establishment of links with ALE, it will not overcome these limitations. The need for an automated system that is able to achieve a full ALE capability, clearly exists. One alternative would be to use a CDA to predict the best frequency to use. Frequency prediction is based on historical data and modeling computations that may or may not be valid. To provide useful outputs, a CDA must take into consideration antenna radiation patterns as a critical variable in determining usable frequencies for establishing connectivity. Having identified a usable frequency, the operator can pre-tune the transmitter to this frequency. This alternative uses the CDA to identify potential frequencies, and positive connectivity has to be tested by either ALE or by the operator. It is still manually intensive, with little advantage gained from having ALE.

Another alternative would be for the OTC to designate a pre-determined frequency on which to set up the transmitters, so when required, the ALEM/C could establish connectivity automatically. However, if the pre-determined frequency or set of frequencies is unusable, the operator would still be forced to find an usable frequency through either experience or through trial and error, and there would have been no significant gain from having ALE onboard.

The final alternative would be to use the ALE modem/controller to provide sounding transmission from the OTC's flagship or other designated platform which is assumed to have a full Option 4 ALE capability. Units with Option 3E configurations can scan for these sounding calls from the designated platform and develop a profile of usable frequencies based on these sounding transmissions. Sounding transmissions can be updated on a periodic basis. By recording the sounding frequencies on the Option 3E platforms, the ALE transmitter can be pretuned to one of the frequencies on which an "acceptable" sounding call was heard. When connectivity is lost on the operating frequency, the trans-

mitter can be retuned to another “acceptable” frequency and patched to the ALE, which can automatically re-establish connectivity on the new frequency when an LQA signal is detected. This assumes that the antenna radiation patterns between platforms are similar enough to provide connectivity.

2.6.3 Option 4 Trade-Offs

Option 4, the ALE Broadband System, is based on the AN/URC-109 and AN/URC-131 design characteristics. These systems are fully MIL-STD-188-141A ALE-compatible when the required ALEM/C and scanning receiver modifications are installed. This option, provides a system that can fully meet all 11 ALE Rules of Operation in MIL-STD-188-141A. This option is the only option that will support all ALE operational requirements for communication services, and is fully compatible with the HF architectural goals recommended in HF 2000 [reference (7)]. It will support intra-/inter-force requirements, ship-to-forces-ashore requirements, connectivity requirements with U.S. Marines, and with U.S. Air Force AMC aircraft. It is, however, the most expensive option.

2.7 ALE OPTIONS AS POTENTIAL SOLUTIONS

The only option that has been consistent in meeting all ALE requirements, both technical and operational, is Option 4, the ALE Broadband System. This is consistent with the recommendations of HF 2000 [reference (7)], meets all ALE Rules of Operation, and is the recommended ALE option to pursue <u>if cost is not the primary driver.</u> Options are ranked as follows:

1. Option 4, ALE Broadband System, provides the only fully capable and integrated system that is upgradeable for future growth. This option meets all requirements set forth by MIL-STD-188-144A.
2. Option 3E, Broadband Receiving Subsystem, is capable of supporting a limited ALE capability by means of automatic receive and manual transmit tuning.
3. Option 1, Stand-alone ALE Transceiver, is capable of supporting a full ALE capability in the half-duplex mode. It will provide a limited ALE capability if it is used to support multiple circuits.

Section Three develops an HF ALE transition plan that provides the Fleet with an HF ALE capability to meet operational and technical requirements within projected budget constraints.

SECTION THREE
ALE TRANSITION PLAN

3.1 OVERVIEW

This section recommends an HF ALE transition plan that was developed through the process of:

1. Analyzing communications plans and circuit requirements (see Appendix C)
2. Establishing criteria for characteristics to determine if a circuit is suitable for ALE
3. Identifying circuits in typical communications plans which are potential candidates for ALE
4. Analyzing HF communications technologies to develop configuration options (see Appendix E)
5. Establishing platform implementation priorities based on warfare tasking and command support requirements
6. Reviewing budgetary plans for equipment installation
7. Identifying preferred implementation options that would satisfy operational and technical requirements.

The recommended options were then time-sequenced to execute the most cost-effective transition of HF ALE into the Fleet.

3.2 ALE IMPLEMENTATION PRIORITIES

Affordability dictates phased implementation. Therefore, to aid in ALE implementation and distribution prioritization, the HF communications connectivity requirements of each ship class and their respective priorities for receiving an ALE capability were analyzed. Based on the two communications plans which were examined (see Appendix D) to assess the various services that can take advantage of ALE, it was possible to determine communications requirements for specific ship classes that would require ALE support. From this list, the platforms were evaluated for the relative need for each to receive an ALE capability.

Numbered Fleet Commander flagships were designed with the primary purpose of supporting a Numbered Fleet Commander, and have been upgraded to support Joint/Allied operations with embarked CJTF or Naval Component Commander staffs. Their communications suite configurations support a large number of high priority HF services for Navy/ Joint/Combined/Coalition communications and have the highest priority for receiving HF ALE. They also gain the most benefit from HF ALE.

Battle Force/Battle Group/Amphibious Task Force Commanders also have a strong requirement for HF ALE due to their role in supporting Joint/Allied operations and amphibious/littoral warfare. Flagships supporting these commanders have an HF ALE priority similar to the Numbered Fleet Commander's requirements. The same rationale holds true for the flagships that support mid-level commanders in critical warfare area commander roles, such as the Anti-Air Warfare Commanders (AAWC) embarked on CG-47s. In addition, amphibious ships that play key roles for littoral operations must have a full HF ALE capability for communications with forces on the beach.

Platforms such as LPD and LSD, which support Marine Expeditionary Unit (MEU) Commanders, have heavy communications demands and have the second highest priority to receive an HF ALE

capability. For the amphibious ship classes, the requirement for HF ALE reflects the need for communications compatibility and operational interoperability with tactical USMC and USA units and their command structure ashore.

The third level of priority is based on requirements for platforms to support the Battle Force/Amphibious Task Force (BF/ATF). Logistic ship classes meet this criteria, and could conceivably have a higher priority in theaters where the logistics chain is long and logistics coordination over a great distance is required. Others in this level of priority would include DDs, DDGs and supporting Maritime Patrol Aircraft (MPA) that normally would be expected to operate in the force battlespace.

HF ALE Priority 4 is targeted for all other platforms with support roles in the Battle Force, such as the mother ship for MCM/MCH operations, MCM/MCH platforms, and augmentation forces such as FFGs. Table 3-1 summarizes HF ALE Platform Prioritization.

Table 3-1. ALE platform priorities.

Platform	PRI. CMD Lvl	SEC. CMD Lvl	TER. CMD Lvl	ALE PRI 1	ALE PRI 2	ALE PRI 3	ALE PRI 4
AGF	NFC	Plat		●			
LCC	NFC	CATF/CLF	Plat	●			
CV	BF	BG	Plat	●			
LHD	ATF	CATF/CLF	Plat	●			
LHA	CATF/CLF	Plat		●			
CG	AAWC	Plat		●			
LPD	MEU	Plat			●		
LSD	MEU	Plat			●		
DDG	Plat					●	
DD	Plat					●	
MLSF Ships	Plat					●	
MPA Acft	Plat					●	
Other Support Ships	Plat						●

Legend:

BF - Battle Force
CATF - Commander Amphibious Task Force
CLF - Commander Landing Force
MEU - Marine Expeditionary Unit
MLSF - Mobile Logistic Support Force
MPA - Maritime Air Patrol
NFC - Numbered Fleet Commander
Plat - Platform

3.3 ALE TRANSITION PLAN PROCESS

The FY96 POM was used as the baseline for identifying the number of ships planned for receiving a particular High Frequency Radio Group (HFRG)/ALE system. The Program Objective Memorandum (POM) and the broadband HFRG (AN/URC-131 and AN/URC-109) procurement/installation plan served as the basis for developing the full broadband HF ALE portion of the HF ALE Transition Plan. The AN/URC-109 and AN/URC-131 broadband communications systems, the core systems of the HF 2000 architecture, are scheduled for installation beginning in FY95. Under the existing POM

timeline, ALE equipment is not scheduled for procurement until FY98 (Table 3-2, POM Installation Plan, refers).

For the purposes of this paper, the POM 96 and Transition Plan timelines display radio and ALE equipment installation dates vice procurement or delivery dates to facilitate Battle Group/Amphibious Readiness Group (BG/ARG) composition and capability visualization. POM 96 broadband radio figures are for the AN/URC-131 only. The AN/URC-109 figures are for units already installed or will be installed shortly, and are all listed as installed by FY95. It should be noted that the POM timeline may not have the HFRG procurement in step with the ALE procurements and does not necessarily take into account BG/ARG composition and deployment schedules. Because of the high degree of capability a broadband system can provide to support ALE, if ALE equipment is procured without HFRG in place, the assets (and funds) cannot be utilized until HFRG is procured and installed. (Reference (11) indicates that ALE will be installed on AN/URC-109-equipped ships before FY98. It is not clear if the funding for this earlier ALE modification is in place of the FY98 funding, or if it is in addition to the FY98 funding profile. If it is additional to the FY98 ALE funding, then alternate units can be ALE configured.) In the Transition Plan timeline, unfunded options appear in parentheses.

BG and ARG compositions were examined for required configurations. BG configurations can be relatively simple or very complex. If BGs are not involved with Joint, Combined, or Coalition operations, the Navy intra-force connectivities is fairly simple. But in a Joint environment, the connectivity requirements become very complex. As a result, carriers should be refitted with full broadband HF ALE. ARGs predominately operate in a Joint environment and therefore require very complex communications support. To configure one ARG with a minimum of two broadband capable platforms to function as the interface with USMC units ashore, an AN/URC-131-configured LHA should deploy with an AN/URC-109 configured LHD. Platforms not scheduled to receive broadband systems are proposed to received configurations with a reduced capability that can meet minimal ALE functions, e.g., Option 3E and 1 combination.

The HF ALE Transition Plan timeline was developed for transitioning the Fleet to an HF ALE capability for operational considerations. The HF ALE Transition Plan timeline is based on providing the broadband systems with ALE to the major command platforms (Option 4), and providing the rest of the force with a lower cost, yet affordable ALE configuration (Options 3E and 1) that renders forcewide ALE capability compliant with MIL-STD-188-141A.

3.3.1 POM ALE Transition Plan

The POM ALE Transition Plan was based on the assumption that all platforms would ultimately be configured with a full broadband HF communications capability, a stated goal of HF 2000. Initially, broadband HF ALE ship classes were identified based on the operational requirement for all command platforms, down through AAWC, to be fully ALE-capable and compatible with all Joint ALE sites, including potential afloat JTF and JFACC platforms. However, the POM 96 funding currently does not satisfy this profile. Procurement and funding shortfalls were identified as follows:

LCC Short one AN/URC-131.

CV/CVN Short one AN/URC-131. Figure is satisfactory if the Training CV is not scheduled to get HFRG (on the assumption that it will not deploy).

CG-47 Short seven AN/URC-131. This figure is satisfactory as long as the ships equipped are flight II and above.

MLSF Only one AOE-6 class was identified as receiving the AN/URC-131. It is recommended that one third of the MLSF ships should be configured with ALE to meet long range coordination requirements, as found in Pacific and Indian Ocean scenarios. If AN/URC-131s are not going to be procured in sufficient numbers to equipped this many MLSF ships, then they should be included in the Alternative ALE Transition Plan discussed in paragraph 3.2.2 below.

Reviewing the POM, there appears to be sufficient numbers of AN/URC-131 planned for procurement to meet the requirement for each command ship to be equipped with a system. The installation plan, however, does not ensure that each command ship gets the capability, and does not reflect a requirement for aircraft to receive an ALE capability, such as the MPA P-3s which operate in support of BGs. Table 3-2 reflects the POM FY96 Installation Plan as currently known.

Table 3-2. POM installation plan.

Platform	# of Ships	Plan	HFRG Thru '95	ALE Thru '95	HFRG '96	ALE '96	HFRG '97	ALE '97	HFRG '98	ALE '98	HFRG '99	ALE '99	HFRG 2000/ 2001	ALE 2000/ 2001	Totals HFRG/ ALE
AGF	2	131	1		1					1		1			2 / 2
LCC	2	131							1	2					1 / 2
CV/CVN	12	131	3 +1				1		2 + 1	7	1	2	2	1	9 + 2 / 10
LHD 1 (URC 109)	6	109	6												6 / 0
LHA	5	131	1		2					5	1		1		5 / 5
CG 47	27	131	6		4		2		2	2	2	6	4	5	20 / 13
LPD	11	131													0 / 0
LSD	17	131							1		1		4		6 / 0
DDG 51	27	131									1		2	3	3 / 3
DD 963	32	131									2		1		3 / 0
MSC/Aux	79	131					(AOE) 1								1 / 0
Training & ISEA		131	3												3 / 0
Totals		POM	18		7		4		7	17	8	9	14	10	58 / 36

LEGEND:

= Numbers from OPN POM 96 and fielding data. FYs are installation completion.

+ = Number after the plus sign is new construction with HFRG installed.

3.3.2 HF ALE Transition Plan

The HF ALE Transition Plan is based on the assumption that although a full, broadband, MIL-STD-188-141A-compliant HF ALE system is the preferred force HF communications architecture, due to budgetary constraints, not all platforms will be configured with a full broadband system. The basis of the HF ALE Transition Plan is to provide the warfighter with an affordable ALE architecture that takes into account operational considerations of how HF is used in the fleet, BG and ARG deployment composition and schedules, and force tactical dispositions, where the desirable situation would be all deploying units have an ALE capability.

In the HF ALE Transition Plan, a full broadband HF system, either an AN/URC-131 or an AN/URC-109, is required on all major command platforms based on the existing POM funding plan.

(The deficiencies are the same as discussed in paragraph 3.2.1.) This plan assumes that the ALE modifications kits have been installed in the broadband systems. The broadband HFRG implementation with ALE provides the minimum capability necessary to ensure compatibility with all Joint ALE sites, including potential afloat CJTF and Joint Force Air Component Commander (JFACC) platforms.

The HF ALE Transition Plan also provides a standard ALE configuration to all nonbroadband platforms. These platforms are equipped with a limited ALE capable system (Option 1) and an automatic receive and manual transmit capability (Option 3E) ALE support system. The transceiver (Option 1) replaces transmitters and receivers with their antenna couplers on a one-for-one basis to prevent installing additional antennas to already crowded topside spaces. The Option 3E provides an unlimited frequency monitor capability at a very affordable price, to support all HF services. The list of platform classes that would receive this configuration includes CG-47 (Flight I), LPD, LSD, DDG-5 1, DD-963, and Mobile Logistic Support Force (MLSF) ships.

Not shown in Table 3-3 is the reallocation of POM assets that should be made to meet the requirement for broadband ALE on all major command ships. In order not to increase the procurement of AN/URC-131s and the commensurate adverse impact on the budget, a reallocation of POM units is recommended. The three DDG-5 1 and three DD-963 units should be reallocated to remedy the shortfall on the LCC and the CVN. Since the AN/URC-131 configuration differs between platforms, early reallocation is recommended.

It should be noted that the combination of Options 3E and 1 on non-major command platforms will not provide an upgradeable transition path to a full broadband ALE capability with existing technology. However, focused research and development could rectify this deficiency. The numbers required are noted as deficiencies in Table 3-3 by the number of platforms listed in parentheses (#).

3.4 ALE TRANSITION PLAN

From the options developed by analyzing ship equipment configurations, ALE implementation configurations, ALE standards requirements and operational requirements, and the relative costs of the different options versus the operational gains of each option, it is clear that from an operational perspective the best option is to implement full broadband radios with full ALE implementation on all ships. The transition from today's narrowband architecture to a full broadband HF radio system with ALE is also the most expensive.

The analysis also concluded that with the current POM, and in the current budgetary environment, the HF ALE Transition Plan could provide a limited ALE capability for all platforms that required ALE through Priority 3. The ALE Transition Plan consists of a combination of full broadband HF systems on Priority 1 major command ships, supported by Priority 2 and 3 platforms with a mix of low-cost narrowband automatic receive/manual transmit tuning configurations augmented with a very limited number of medium-cost HF automatic transceivers with ALE. This option provides an automatic ALE capability at a reduced cost compared to the full or delayed broadband system option. Priorities 2 and 3 ships platforms configured with Option 3E or Option 1 will not have an upgrade path to full broadband systems with fully integrated automatic ALE.

Table 3-3. HF ALE transition plan (modified POM).

Platform	# of Ships	Plan	Radio Thru '95	ALE Thru '95	Radio '96	ALE '96	Radio '97	ALE '97	Radio '98	ALE '98	Radio '99	ALE '99	Radio 2000/ 2001	ALE 2000/ 2001	Totals Radio/ ALE
AGF	2	Option 4	1		1					2					2 / 2
LCC	2	Option 4							1	2					1 / 2
CV/CVN	12	Option 4	3 + 1				1		2 + 1	6 (1)	1	2	2	2	11 / 10 (1)
LHD 1	6	Option 4	6							(6)					6 / (6)
LHA	5	Option 4	1		2					5	1		1		5 / 5
CG 47	27	Option 4	6		4		2		2	3 (7)	2	3	4	7	20 / 13 (7)
		Option 3E							(3)	(3)	(2)	3	(2)	(2)	(7) / 3 (4)
		Option 1							(3)	(3)	(2)	(2)	(2)	(2)	(7) / (7)
LPD	11	Option 3E							(4)	(4)	(4)	(4)	(3)	(3)	(11) / (11)
		Option 1							(4)	(4)	(4)	(4)	(3)	(3)	(11) / (11)
LSD	17	Option 4							1	(1)	1	(1)	4	(4)	6 / (6)
		Option 3E							(2)	(2)	(2)	(2)	(1)	(1)	(5) / (5)
		Option 1							(2)	(2)	(2)	(2)	(1)	(1)	(5) / (5)
DDG 51	27	Option 4									1	(1)	2	(2)	3 / (3)
		Option 3E							(8)	(8)	(8)	(8)	(8)	(8)	(24) / (24)
		Option 1							(8)	(8)	(8)	(8)	(8)	(8)	(24) / (24)
DD 963	32	Option 4									2	(2)	1	(1)	3 / (3)
		Option 3E							(10)	(10)	(10)	(10)	(9)	(9)	(29)/ (29)
		Option 1							(10)	(10)	(10)	(10)	(9)	(9)	(29)/ (29)
MSC/Aux	79	Option 4					1			(1)					1 / (1)
		Option 3E							(5)	(5)	(5)	(5)	(5)	(5)	(15) / (15)
		Option 1							(5)	(5)	(5)	(5)	(5)	(5)	(15) / (15)
Totals		Option 4	18		7		4		7	18 (16)	8	5 (4)	14	9 / (7)	58 / 36 (23)
		Option 3E							(32)	(32)	(31)	3 (28)	(28)	(28)	(91) / 3 (88)
		Option 1							(32)	(32)	(31)	(31)	(28)	(28)	(91) / (91)

If the budgetary environment improves permitting greater broadband procurements, it is recommended that the Navy change the procurement profile to include more broadband systems and less of the Option 3E and 1 configurations. This would have minimal operational impact up to FY98 when the first ALE systems are scheduled to be procured. Any such would result in a significant increased capability.

3.5 ALE OPERATIONS

ALE operations are based on the warfighting requirement to use HF for Extended-Line-Of-Sight (ELOS) communications within a BG, between BGs, and between BGs and ARG. In Joint and Combined operations, this requirement extends to forces ashore, supported by communications suites such as the USMC's TSC-120 and the USA's TSC-122 C4I vans. The ELOS requirement extends to a range of approximately 300 nms in most tactical situations; further in some, less in others. In all

cases, HF is heavily used for tactical communications, with tactical voice services accounting for the largest number of HF circuits.

ALE support is critical to the continuous connectivity of Joint and Combined coordination and command services, and of real-time tactical services that support the various warfare areas. In the Joint/Combined case, the connectivity includes teletype, data and imagery, as well as real-time voice. Real-time tactical services are primarily voice, with future growth in data and imagery areas.

3.5.1 Broad band ALE Operations

The primary emphasis in this area is the connectivities between command entities, especially in a Joint environment, such as between the CJTF, the OTC and the Commander Amphibious Task Force (CATF); between the CATF and Commander Landing Force(CLF); and between CATF/CLF and the OTC of the supporting BGs. At this level, the AN/URC-109 and the AN/URC-131, with ALE modifications, are the only systems that can provide the number of circuits to support the number of high priority services that require ALE.

Broadband HF ALE permits greater emphasis on frequency management through the use of frequency pools. Frequency pooling permits ALE to select a frequency from a greater number of frequencies, thus increasing the probability of finding a workable connectivity. This system also supports ALE frequency monitoring and records the results in a database. The operator can then use the database to select usable frequencies when connectivities are required.

Once frequencies are allocated or pooled, the ALE system is setup to automatically scan the allocated frequencies for each circuit. Frequency selection for each circuit can based on using a group call to the participants to “map” the spectrum of assigned frequencies and to select the frequency with the best score for each circuit. Once a database profile has been established for the different circuits, the ALE can used to establish connectivity automatically.

After all the circuits are operating, the master station ALE will continue to transmit LQA calls on frequencies not currently being used to establish a database of scores for each assigned frequency. The other stations will scan the frequencies not being used to detect the LQA calls of the master station and respond with the appropriate information. This will also be entered into their database of scores.

When connectivity is lost on a circuit, the operator is alerted to re-establish connectivity. The operator will direct the ALE to begin LQA call on the appropriate set of frequencies. When a frequency is found that satisfies the ALE LQA score criteria, connectivity may be established with that station or coordination with the master station will be initiated to ensure that all stations can use the frequency. Normally the master station will issue a group call to ensure that all participants can use the frequency. If the new frequency is not usable by some units, the master station will continue to transmit LQAs until a usable frequency is found thereby repeating the process.

3.5.2 Non-Broadband ALE Operations

The use of non-broadband systems, such the pre-selector and ALE scanning receiver (Option 3E), and the transceiver with ALE (Option 1) requires a different approach to using ALE. Since neither system will meet the full ALE function set of 11 ALE rules prescribed in MIL-STD-188-141A, the systems must be used in combination to overcome their respective limitations.

Non-broadband ALE operations are based on meeting intra-/inter-force real-time tactical communications requirements. This means supporting voice services so that they are virtually uninterrupted;

i.e., the time between the time connectivity is lost and time it is restored is minimal, even though the transmitters are largely manually tuned. This is accomplished by using a broadband system as the master station to issue sounding calls on all allocated frequencies not currently in use from the pool of frequencies or from the set of frequencies allocated to each circuit. The pre-selector configuration (Option 3E) scans all frequencies in a pool or the set of frequencies allocated to each circuit and records the frequencies on which it hears a sounding LQA call. These frequencies are saved in a database. When a service loses connectivity and the operator is alerted, the operator can select from the database another frequency on which the Option 3E system had previously detected a call. A transmitter is manually tuned to the new frequency and the next time a call is received on the new frequency, the ALE modem/controller responds to the LQA and re-establish the connectivity automatically.

A variation of this method would be to have the operator monitor the database and automatically retune a backup transmitter to the best frequency heard. When connectivity is lost, the transmitter would be switched into the ALE configuration to establish the link automatically the next time the ALE modem/controller hears a call on the new frequency. This assumes that there is a spare HF transmitter available, and that the connectivity path for that frequency still exists between the two systems.

The transceiver configuration (Option 1) provides a full ALE capability on one service or circuit. This gives the OTC flexible options not previously held. The Option 1 system can be dedicated to support his highest priority circuit, so that when connectivity is lost the operator can initiate ALE to automatically re-establish connectivity on the first frequency it hears a LQA call, or from a set of frequencies whose database profile was established using Option 3E configuration and sounding calls. The transceiver option is much faster than the Option 3E configuration because the transmit component tunes automatically with the receive component, and therefore can respond immediately to LQA calls to establish connectivity. By using the frequency database developed by the Option 3E configuration, this assumes that the path is available for the transceivers antenna radiation pattern, which may be different that the Option 3E antenna radiation pattern.

3.6 THE NEXT STEP: ALE CONCEPT OF OPERATIONS

The recommended options/configurations presented here are based on Navy shipboard HF ALE configurations. To ensure interoperability, a study should be undertaken examining the interoperability issues between Navy platforms and units of the USMC, USA, and USAF. There is a need to develop both a Navy HF ALE Concept of Operations and a Joint Concept of Operations (CONOPS) to analyze how Navy units would use ALE to communicate in a Joint environment. The Joint CONOPS should review the equipment configurations of the other services, interpretation of military and federal standards, their equipment implementation, and service-unique operations. The result of these reviews should be to develop a single, integrated CONOPS, or at least a guideline, for using ALE in Joint operations.

APPENDIX A
ACRONYMS

AAW Anti-Air Warfare
AAWC Anti-Air Warfare Commanders
ADIZ Air Defense Identification Zone
ALE Automatic Link Establishment
ALEM/C Automatic Link Establishment Modem/Controller
AM Amplitude Modulation
AMC Air Mobility Command
AMP Amplifier
AREC Air Resource Element Coordinator
ARG Amphibious Readiness Croup
ASUW Anti-Surface Warfare
ASW Anti-Submarine Warfare
ATF Amphibious Task Force
AUSCANNZUKUS Australia, Canada, New Zealand, United Kingdom, United States
AUTODIN Automated Digital Information Network

BF BattleForce
BG Battle Group
bps bits per second

C & R net Coordination and Reporting Network
C4I Command, Control, Communications, Computers, and Intelligence
CATF Commander Amphibious Task Force
CDA Computer Decision Aid
CJTF Commander Joint Task Force
CLF Commander Landing Force
CMD Command, Commander
CNO Chief of Naval Operations
CONOPS Concept of Operations
COTS Commercial-Off-The-Shelf
CSS Communications Support System

DCS Defense Communications System
DOD Department of Defense

ELOS Extended Line-Of-Sight
EMI Electro-Magnetic Interference
EW Electronic Warfare

FAD Fighter Air Direction
FAX Facsimile
FED-STD Federal Standards
FLTBCST Fleet Broadcast
FLTSAT Fleet Satellite
FY Fiscal Year

HF High Frequency
HFRG High Frequency Radio Group

IMCS Integrated Maritime Communications System

JFACC Joint Force Air Component Commander
JTF Joint Task Force
JTIDS Joint Tactical Information Distribution System

Kbps Kilo-bits-per-second
KHz Kilo-Hertz
km Kilometer

LF Landing Force
LQA Link Quality Analysis

MEU Marine Expeditionary Unit
MHz Mega Hertz
MIL-STD Military Standards
MLSF Mobile Logistics Support Force
MPA Maritime Patrol Aircraft

NATO North Atlantic Treaty Organization
NAVCOMSTA Naval Communications Station
NCCOSC Naval Command and Control Ocean Surveillance Center
NFC Numbered Fleet Commander
NGF Naval Gunfire
NGF S Naval Gunfire Support
NRaD NCCOSC Research and Development Division
NVI Near VerticalIncidence
NVIS Near VerticalIncidence Skywave

OTC Officer in Tactical Command

PARPRO Peacetime Aerial Reconnaissance Program
PIRAZ Primary Identification and Radar Advisory Zone
POM Program Objectives Memorandum

RCVR Receiver
RF Radio Frequency
RPT Report(ing)

SACCS Shipboard Automatic Communications Control System
SAR Search and Rescue
SATCOM Satellite Communication
SEVOX Secure Voice
SI Sensitive Intelligence
SID Sudden Ionosphere Disturbance
SPEC Special, Specification
STANAG Standardization Agreement
STM Serial Tone Modem
STW Strike Warfare

TAC Tactical
TADIL Tactical Data Link
TCC Tactical Command Center
TD Technical Document
TTY Teletype

USA United States Army
USAF United States Air Force
USMC United States Marine Corps

VVFD Voice, Video, Facsimile, Data

XMT Transmitter, Transmit

APPENDIX B

BIBLIOGRAPHY

1. "From the Sea, Preparing the Naval Service for the 21st Century," Navy and Marine Corps White Paper, September 1992.

2. CINCPACFLT Pearl Harbor HI 2823 10Z OCT 94, NOTAL, Subj: "HIGH FREQUENCY (HF) READINESS AND MODERNIZATION."

3. COMNAVAIRPAC San Diego CA 020121Z SEP 94, NOTAL, Subj: "HIGH FREQUENCY (HF) READINESS."

4. Irv Olson & Laird Wallace, "New Tactical Applications of HF Technology Hold Promise for Future Warfighters," April 1994, AFCEA C4I Symposium

5. Terry A. Danielson, "Professional Notes: Tactical HF Can Get a Whole Lot Better,'' Naval Institute Proceedings, November 1993, pp 90-92.

6. "Automated High Frequency, High Performance Communications System Onboard USS Tarawa," NRaD Technical Document 1642, March 1994.

7. "HF 2000 Architecture", NRaD Draft, August I 994.

8. MIL-STD-188-141A, Interoperability and Performance Standards for Medium and High Frequency Radio Equipment, September 15, 1988.

9. "Shipboard Implementation and Concept of Operations for Automatic Link Establishment," NRaD Technical Document 2575, September 1993.

10. "RF ALE Distribution," NRaD Document 826-D003-94, September 9, 1994.

11. CNO Washington DC//N6I// 071903Z NOV 94 Subj: "HIGH FREQUENCY (HF) READINESS AND MODERNIZATION."

12. "High Frequency Radio Group (HFRG) Planned Installations," SPAWAR LTR 2300 Ser PMW 152-1 1A/119, May 12,1994.

APPENDIX C
COMMUNICATIONS PLANS

C.1 COMMUNICATIONS PLANS

Two communications plans were selected to analyze communications requirements, an unclassified version of the Desert Storm Navy communications plan as a representative Joint/Combined/Coalition communications plan, and an Amphibious communications plan from the LHD A specification as a representative plan for amphibious operations.

Both communications plans were examined to determine how HF services were used, how they were used in terms of the criticality of the service to operational units, the requirement for the service to be supported by an HF circuit, and to determine which platforms required HF ALE to meet HF communications requirements. The communications plans used to evaluate requirements in HF 2000 were examined to determine which HF services could and should benefit from use of ALE. First, the two communications plans were examined in the traditional communications plan method, i.e., assigning specific frequencies to support circuits for a given service. Secondly, the communications plans were reviewed again to determine if the service requirements still held true if frequency pools were used to assign frequencies to support a BG. The list of services that could/should benefit from the use of ALE were identical.

Using the ALE eligibility criteria, services that are operational candidates for use with ALE were identified and marked under “ALE.” Table C–1 is an unclassified communications plan used in Operations Desert Shield/Desert Storm, and Table C–2 is a typical ARG communications plan.

Table C-1. Desert Shield/Desert Storm communications plan.

Net	ALE	CV	CG	DD	DDG	MLSF	USAF	Joint Land	Data Type	HF	UHF	UHF Sat	VHF	SHF Sat
High Cmd	• L	X							V	P		S		
Fleet Command	• L	X							V	S		P		
Fleet Flash	• L	X							M	S		P		
Flt Tac/ Warning		X	X	X	X	X			V	S	P			
Fleet Common		X	X	X	X	X			V		P			
Bridge To Bridge		X	X	X	X	X			V				P	
NFC Command		X							V			P		S
NFC Tac/ Warning	• L	X							M	P		S		P
FLTSAT SEVOX		X	X	X	X	X			V			P		
PIRAZ		X	X				X	X	V		P			
Raspberry		X						X	M	P				
Joint Air Support Cmd	•	X	X				X	X	V	S				P
Area ASW Coordination	• L	X						X	V	S		P		
Combined SAR	• L	X					X	X	V	P	P			
FLTBCST		X	X	X	X	X			M	S		P		
Metro BCST		X							D/I			P		P
FAX BCST		X							I	S		P		
FIST BCST		X							I			P		
TADIXS A		X	X	X	X				M			P		
TRAP		X						X	M			P		
CdrShip/Shore Multi-Chnl	•	X						X	M	S		P		
Ship/Shore Pri	•	X	X	X	X	X		X	M	S		P		
SI Ship-Shore	•	X						X	M	S		P		
TACINTEL		X	X		X			X	M			P		
SI Common		X							M	S		P		
OTCIXS		X	X	X	X				M			P		
SSIXS							X		M			P		
CUDIXS		X	X	X	X	X		X	M			P		
Area Comm Coord		X				X		X	M			P		

Legend:

- • = ALE Candidate
- O = Optional
- P = Primary
- R = Receive
- S = Secondary
- X = Has the capability
- L = Low usage rate service
- V = Voice
- M = Message
- D = Data
- I = Imagery
- CW = Continuous Wave

Table C-1. Desert Shield/Desert Storm communications plan (Continued).

Net	ALE	CV	CG	DD	DDG	MLS	USAF	Joint Land	Data Type	HF	UHF	UHF Sat	VHF	SHF Sat
Area Cmdr Coord	• L	X				X		X	M	S		P		
Conference Cmd		X						X	V			P		P
Link 11		X	X	X	X		X	X	D	P	S			
Link 14		X		X					M	P	S			
Link 16		X	X		X				D		P			
Link 4A		X	X		X				D		P			
BF Cmd	•	X	X	X	X				V	S		P		
BF Ops/Admin.	• L	X	X	X	X	X			M	P				
BF Tac Warning		X							V	S	P			
BF Spec Rpt/Coord		X							M	S	P			
BF BCST (Orestes)	•	X	X	X	X	X			M	P				
BF SI Orestes		X	X		X				M	S		P		
BF HIT BCST		X	R	R	R	R	R		M	P				
BF Flt Imagery		X							I			P		
BF Comm Coord	• L	X	X	X	X	X			M	S		P		
EW C&R		X	X	X	X				V	P				
ES-3 Ctrl & Rpt		X							V		P			
EW Decp C&R		X	X	X	X	X			V	S		P		
AREC C&R		X						X	V	P				
Data Sys Admin.	• L	X	X	X	X	X	X	X	V	P				
Force Trk Coord	•	X	X	X	X		X	X	V	P				
BF-Shore DB Coord	• L	X						X	M	S		P		
Cryptologic Coord	•	X	X	X	X			X	M	S		P		S
DF Coord	• L	X	X	X	X			X	V/M	S		P		
PARPRO	• L	X					X	X	M	P	S			
MLSF Coord	• L	X				X		X	M	P		P		
Unrep Coord	• L	X	X	X	X	X			M	P				
Vertrep Coord	• L	X	X	X	X	X			M	P				

Legend:

- • = ALE Candidate
- O = Optional
- P = Primary
- R = Receive
- S = Secondary
- X = Has the capability
- L = Low usage rate service
- V = Voice
- M = Message
- D = Data
- I = Imagery
- CW = Continuous Wave

Table C-1. Desert Shield/Desert Storm communications plan (Continued).

Net	ALE	CV	CG	DD	DDG	MLS	USAF	Joint Land	Data Type	HF	UHF	UHF Sat	VHF	SHF Sat
Strike Ctrl		X							V		P			
Marshal Control		X							V		P			
Land/Launch		X							V		P			
Departure		X							V		P			
Approach A		X							V		P			
Approach B		X							V		P			
Final A		X							V		P			
Final B		X							V		P			
Homer		X							CW	S	P			
STW C&R		X	X						V	P	S			
Atk/Stk Ctrl		X							V		P			
Stk Plan	•	X							M	S		P		
Atk Cmn		X							V		P			
Tkr Ctrl		X							V		P			
Military Emergency		X	X	X	X		X	X	V		P			
Scene Of SAR		X	X		X		X		V		X			
SAR Coord	•	X						X	M	X				
Joint SAR Coord.	• L	X					X	X	M	X				
Int. Air Distress		X	X				X		V				X	
Int. Calling & Distress		X							X	P				
Int. Lifeboat		X							V	P				
Int SAR Coord		X						X	V	P				
SAR Working		X						X	V	P				
AAW C&R		X	X	X	X		X		V	P				
Joint AAW Coord.	•	X					X	X	V	P				
Outer Air Battle Ctrl		X					X		V		P			
Inner Air Battle Ctrl		X	X	X	X				V		P			
BF Tkr Coord		X	X	X	X				V	P	S			
SAAW C&R			X	X	X				V		P			
FAD (1-N)		X	X		X				V		P			
ADIZ Crosstell		X	X					X	V	P				

Legend:

- • = ALE Candidate
- O = Optional
- P = Primary
- R = Receive
- S = Secondary
- X = Has the capability
- L = Low usage rate service
- V = Voice
- M = Message
- D = Data
- I = Imagery
- CW = Continuous Wave

Table C-1. Desert Shield/Desert Storm communications plan (Continued).

Net	ALE	CV	CG	DD	DDG	MLS F	USAF	Joint Land	Data Type	HF	UHF	UHF Sat	VHF	SHF Sat
ASUW C&R		X	X	X	X	X			V	P				
SAG Ctrl/ Coord	• L		X	X	X				V	S	P			
SAG ASUW Air Ctrl			X	X	X				V		P			
ASW C&R		X	X	X	X				V	P	S			
MPA Cmn	• L	X						X	V	P				
ASW Air Ctrl		X	X	X	X				V		P			
Screen Tac			X	X	X				V		P			
ASW Air Coord	• L	X	X	X	X				V	P	S			
ASW Helo Coord	• L	X	X	X	X				V	S	P			
ASW Helo Ctrl		X	X	X	X				V		P			
Helo Cmn		X	X	X	X	X			V	S	P			
Sub Ops Coord		X						X	M			P		
SSN Alert/ Coord		X						X	M			P		
Lamps Data Link		X	X	X	X				D		P			
ASW/ASUW C&R		X	X	X	X				V	P				

Legend:

- • = ALE Candidate
- O = Optional
- P = Primary
- R = Receive
- S = Secondary
- X = Has the capability
- L = Low usage rate service
- V = Voice
- M = Message
- D = Data
- I = Imagery
- CW = Continuous Wave

Table C-2. ARG communications plan.

Net	ALE	LCC	LHD	LHA	LPD	LSD	LST	LF	Data Type	HF	UHF	UHF Sat	VHF	SHF Sat
High Command	• **L**	X	X	X				X	V	P		S		
Fleet Command	• **L**	X	X	X					V	S		P		
Fleet Flash	• **L**	X	X	X					M	S		P		
NFC Command		X	X	X					V			P		S
Joint Air Support Cmd		X	X					X	V	S				P
Conference Cmd		X	X	X				X	V			P		P
FLTBCST		X	X	X	X	X			M	S		P		
CUDIXS		X	X	X	X	X	X		M			P		
Metro Bcst		X	X	X				X	D/I			P		P
FAX Bcst		X	X	X				X	I	S		P		
FIST Bcst		X	X	X				X	I			P		
TADIXS A		X	X	X					M			P		
TRAP		X	X	X				X	M			P		
Ship/Shore Multi Chnl	•	X	X	X					M	S		P		
SI Ship-Shore	•	X	X	X					M	S		P		
TACINTEL		X	X	X				X	M			P		
SI Common	•	X	X	X					M	S		P		
OTCIXS		X	X	X					M			P		
Area Comm Coord	• **L**	X	X	X				X	M			P		
Area Cmdr Coord	• **L**	X	X	X				X	M	S		P		
BF Cmd	•	X	X	X					V	S		P		
BF Tac Warning	•	X	X	X	X	X	X		V	S	P			
BF Spec Rpt/Coord	•	X	X	X					M	S	P			
Link 11		X	X	X				X	D	P	S			
Link 14		X	X	X	X	X	X		M	P	S			
Link 4A		X	X	X	X				D		P			
BF Ops/Admin	• **L**	X	X	X	X	X	X		M	P				
BF Bcst (Orestes)		X	X	X	X	X	X		M	P				

Legend:

- • = ALE Candidate
- O = Optional
- P = Primary
- R = Receive
- S = Secondary
- X = Has the capability
- L = Low usage rate service
- V = Voice
- M = Message
- D = Data
- I = Imagery
- CW = Continuous Wave

Table C-2. ARG communications plan (Continued).

Net	ALE	LCC	LHD	LHA	LPD	LSD	LST	LF	Data Type	HF	UHF	UHF Sat	VHF	SHF Sat
BF SI Orestes		X	X	X					M	S		P		
BF HIT Bcst		X	X	X	R	R	R		M	P				
BF Flt Imagery		X	X	X					I			P		
BF Comm Coord	• L	X	X	X					M	S		P		
Data Sys Admin	• L	X	X	X				X	V	P				
Force Trk Coord	•							X	V	P				
BF-Shore DB Coord	• L	X	X	X					M	S		P		
Cryptologic Coord	•	X	X	X				X	M	S		P		S
DF Coord	• L	X	X	X				X	M	S		P		
Marshal Control									V		P			
Land/Launch			X	X					V		P			
Departure									V		P			
Approach A			X	X					V		P			
CCA Approach			X	X					V		P			
Homer			X	X					V	S	P			
Mil Emergency		X	X	X					V		P			
Scene Of SAR		O	O	O				X	V		X			
SAR Coordination	•							X	M	X				
Joint SAR Coord.	•	X	X	X				X	M	X				
Int. Air Distress		X	X	X				X	V				X	
Int. Calling & Distress		X	X	X					V	P				
Int. Lifeboat		O	O	O					V	P				
Int SAR Coordination		O	O	O					V	P				
SAR Working		O	O	O				X	V	P				

Legend:

- • = ALE Candidate
- O = Optional
- P = Primary
- R = Receive
- S = Secondary
- X = Has the capability
- L = Low usage rate service
- V = Voice
- M = Message
- D = Data
- I = Imagery
- CW = Continuous Wave

Table C-2. ARG communications plan (Continued).

Net	ALE	LCC	LHD	LHA	LPD	LSD	LST	LF	Data Type	HF	UHF	UHF Sat	VHF	SHF Sat
MLSF Coord	• L	X	X	X					M	P		P		
Unrep Coord	• L	X	X	X	X	X	X		M	P				
Vertrep Coord	• L	X	X	X	X	X	X		M	P				
NFC Tac/ Warning	• L	X	X	X					M	S				P
FLTSAT SEVOX		X	X	X	X	X		X	V			P		
Flt Tac/ Warning		X	X	X	X	X	X		V	S	P			
Fleet Common		X	X	X	X	X	X		V		P			
Bridge To Bridge		X	X	X	X	X	X		V				P	
Pri Tac		X	X	X	X	X	X		V		P			
Sec Tac		X	X	X	X	X	X		V	P				
Pri CI		X	X	X	X	X	X		V		P			
Sec CI		X	X	X	X	X	X		V	P				
Screen Tac									V		P			
Time Tick		O	O	O	O	O	O	O	V	P				
Joint AAW Coord.	•	X	X	X					V	P				
AAW C&R		X	X	X					V	P				
Outer Air Battle Ctrl								X	V		P			
Inner Air Battle Ctrl									V		P			
SAAW C&R								X	V	S	P			
ADIZ Crosstell	•	X	X	X				X	V	P				
BF Tkr Coord	•	X	X	X					V	P	S			
FAD (1-N)		X	X	X				X	V		P			
ASW C&R		OM	O	O					V	P	S			
Area ASW Coord	• L	X	X	X					V	S		P		
ASW Air Coord	• L	O	O	O					V	P	S			
ASW Air Ctrl									V		P			
MPA Cmn	• L	O	O	O					V	P				
ASW Helo Coord	• L								V	S	P			

Legend:

- • = ALE Candidate
- O = Optional
- P = Primary
- R = Receive
- S = Secondary
- X = Has the capability
- L = Low usage rate service
- V = Voice
- M = Message
- D = Data
- I = Imagery
- CW = Continuous Wave

Table C-2. ARG communications plan (Continued).

Net	ALE	LCC	LHD	LHA	LPD	LSD	LST	LF	Data Type	HF	UHF	UHF Sat	VHF	SHF Sat
ASW Helo Ctrl									V		P			
ASW/ASUW C&R		X	X	X	X	X	X		V	P				
ASUW C&R		X	X	X	X	X	X		V	P				
SAG Ctrl/Coord	• L								V	S	P			
SAG ASUW AIR CTRL									V		P			
Helo Cmn		X	X	X	X	X	X	X	V	S	P			
EW C&R		X	X	X	X	X	X		V	P				
EW Decp C&R		X	X	X	X	X	X		V	S		P		
AREC C&R		X	X	X					V	P				
LF Command	•	X	X	X				X	V	P				
LF Tactical		X	X	X				X	V				P	
LF Radio Relay	•	X	X	X				X	V				P	
Tac Air Direction		X	X	X				X	V		P			
FAAD Weapon Ctrl	•	O	O	O				X	V	P				
LAAM Cmd	•							X	V	P				
Itinerant Acft Ctrl		X	X	X				X	V		P			
Tac Air Request	•	X	X	X				X	V	P				
Direct Air Support								X	V		P			
Tac Air Cmd	•	X	X	X				X	V	P				
Tac Air Traffic Ctrl		X	X	X				X	V		P			
Fire Support Safety	• L	O	O	O				X	V	P				
Helo Request	•	X	X	X				X	V	P	S			
Helo Direction		X	X	X				X	V	S	P			
Helo LZ								X	V		S		P	
Medevac Clearing	•	O	O	O				X	V	S			P	
LF Recon	•	X	X	X				X	V	P				
Helo Supp Team Ctrl	•	X	X	X				X	V	P				
LF Combat Service Sup	•	X	X	X				X	V	P				

Legend:

- • = ALE Candidate
- O = Optional
- P = Primary
- R = Receive
- S = Secondary
- X = Has the capability
- L = Low usage rate service
- V = Voice
- M = Message
- D = Data
- I = Imagery
- CW = Continuous Wave

Table C-2. ARG communications plan (Continued).

Net	ALE	LCC	LHD	LHA	LPD	LSD	LST	LF	Data Type	HF	UHF	UHF Sat	VHF	SHF Sat
LF Damage Control	•	X	X	X				X	V	P				
LF Med Regulating	•	X	X	X				X	V	P				
Boat Common		X	X	X				X	V				P	
Boat Ctrl (Beach)					X	X	X	X	V				P	
Beach Master Coord		X	X	X				X	V				P	
Amtrac Cmd		X	X	X	X	X		X	V				P	
Shore Party Ctrl		O	O	O				X	V				P	
LF NGFS Support	•	X	X	X				X	V	P				
LF Fire Support Coord		X	X	X				X	V				P	
NGF Control	•	X	X	X				X	V	P				
Air Observation		O	O	O				X	V		P			
NGF Air Spotter		O	O	O				X	V		P			
NGF Ground Spotter	•	O	O	O				X	V	P				
LF Artillery Cmd/Fd	•	O	O	O				X	V	P				
LF Artillery Air Spot.		O	O	O				X	V				P	

Legend:

- • = ALE Candidate
- O = Optional
- P = Primary
- R = Receive
- S = Secondary
- X = Has the capability
- L = Low usage rate service
- V = Voice
- M = Message
- D = Data
- I = Imagery
- CW = Continuous Wave

APPENDIX D

SHIPBOARD EQUIPMENT

D.1 SHIP EQUIPMENT

HF equipment in the Fleet today was designed to support a circuit-based narrowband HF architecture. This architecture, now constrained by the 1950s/60s analog technology available to meet the operational requirements of that time, was designed to provide individual services supported by dedicated circuits. Services are defined in terms of the type of information to be exchanged among a community of users (e.g., AAW-related information). Services are identified by a name that generally describes the content or usage of the service, and may include the information exchange format (voice, data, teletype, facsimile, imagery). Circuits are connectivities identified by a circuit identifier, such as A201. Circuits are described by the characteristics that include the assigned frequency, modulation characteristics, bandwidth, waveforms, and baud rate. As an example, AAWC C&R is a voice service for coordination and reporting information relating to Anti-Air Warfare. The circuit that supports AAWC C&R may be specified as 4221.5 KHz, 3 KHz bandpass, single sideband, using voice modulated Amplitude Modulation (AM).

In a circuit-based, narrowband architecture, circuits are built by patching narrowband transmitters, receivers, couplers, and antennas together to support the customer's service. (For the purpose of this document, narrowband is defined as 3 KHz or less instantaneous bandpass.)

As communications technology evolved, some of the operational requirements continued to be supported by the narrowband architecture. For instance, when a secure voice capability became a requirement, the Navy continued to use narrowband. As such, the existing narrowband architecture is one of the strongest driving forces in the manner in which resources are allocated and used in communications.

HF technology is rapidly advancing to provide greater bandwidth and greater throughput. Simultaneously, communications is moving toward a digital, service-based architecture, with greater computer control and only manual override. HF is becoming the backbone of Extended Line-Of-Sight (ELOS) intra-force RF networking.

This appendix will summarize the existing and new HF equipment configurations by ship class where communications suites are standard or variations of the basic configuration. These configurations are used in Section Three to determine the platform's capability to support the different ALE configurations identified in Section Two.

D.2 EXISTING SHIP EQUIPMENT

The existing HF communications suites in the Fleet are primarily narrowband systems with manually tuned receivers, transmitters and couplers. Figure D-1 is representative of a narrowband HF system currently installed in the fleet and illustrates the various components by their functional name.

To establish a baseline of the collection of equipment that exists in the fleet, four categories are established: (1) Standard Narrowband HF Configuration, (2) Modified Standard Narrowband HF Configuration, (3) LHA Narrowband HF Configuration, and (4) CV Narrowband HF Configuration.

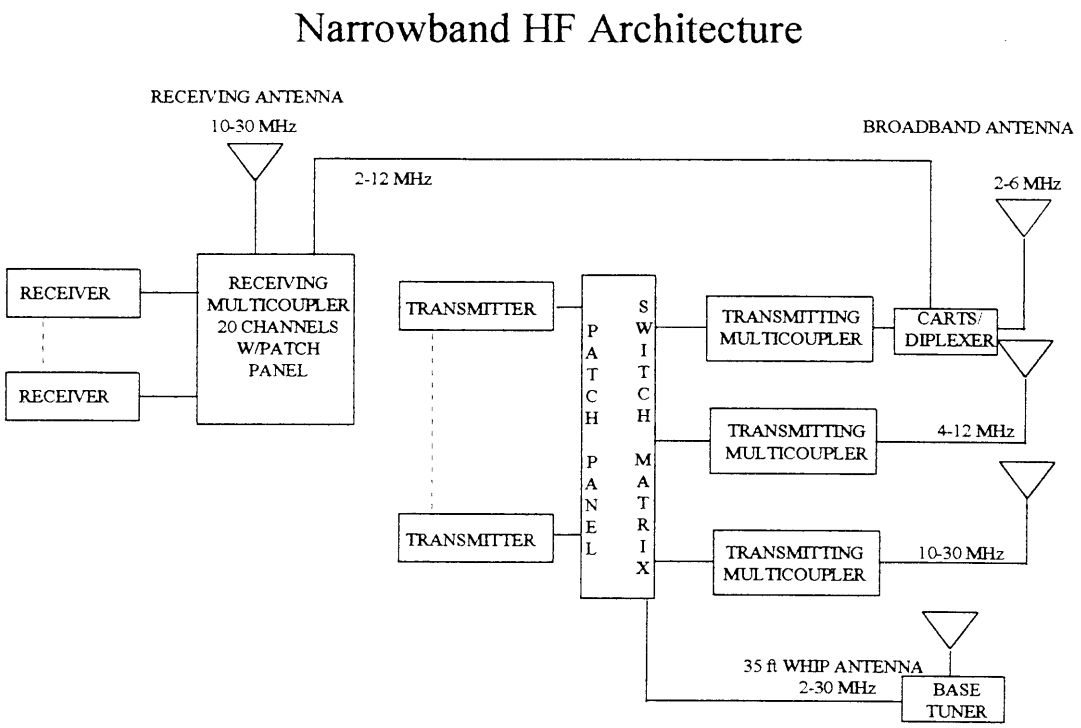

Figure D-1. Generic narrowband HF system.

D.2.1 Standard Narrowband HF Configuration

The standard narrowband HF configuration is a collection of narrowband equipments patched together to meet circuit configuration requirements:

AN/URT-23 Transmitters
R-1051 Receivers
AN/SRA-56/57/58 Transmitter Multicouplers
AN/SRA-49 Receiver Multicoupler
AN/URA-3 8 Transmitter Antenna Coupler
CU-2 113 CARTS for Receivers
Manual RF Switching Matrices

This baseline configuration, with minor variations, is reflected in the following ship classes:

- CG-47 class (Flight II, e.g. CG-54 and newer):
  R-2368/URR-79 Receivers (replaces R-1051)
- DDG-51 class:
  R-2368/URR-79 Receivers (replaces R-1051)
  (The AN/URA-38 Transmitter Antenna Coupler was deleted.)
- FFG-7 class:
  R-2368/URR-79 Receivers (replaces R-1051)
  (The AN/URA-38 Transmitter Antenna Coupler was deleted.)

D.2.2 Modified Standard Narrowband HF Configuration

The modified standard narrowband HF configuration is a collection of new narrowband equipment similar to the standard configuration, but with a newer baseline configuration for three classes of

ships: CG-47 (Flight I), DD-963, and DDG-993. Similar to the standard configuration, this suite of equipment can be configured through patching or switching to meet circuit configuration requirements. The modified configuration includes:

T-1 322/AM-6675 (Modified AM-3 924) Transmitters
R-1903 Receivers
OE-219/232/231 (Modified SRA-34) Transmitter Multi couplers
OA-8796 (Modified AN/SRA-49) Receiver Multicoupler
AN/URA-38 Transmitter Antenna Coupler
CU-2096 Diplexer for Receivers
Normal-Through RF Receiver Switching Matrix
SA-1070 RF Transmitter Switch Matrix

Equipment unique to a specific ship class, with minor variations, are as follows:

- DD-963/DDG-993:
  CU-2096 Diplexer for Receivers
- CG-47 Class (Flight I, e.g., CG-47 through CG-53):
  CU-2 113 Diplexer for Receivers

D.2.3 LHA Narrowband HF Configuration

The LHA HF configuration was the first to depart radically from the standard narrowband HF configuration. The LHA HF suite was designed with greater emphasis on the use of HF transceivers vice independent transmitters and receivers. Like the standard configuration, however, this collection of equipment still must be patched together to meet circuit configuration requirements. The LHA narrowband configuration consists of:

AN/URC-81 Transceivers
AN/URT-38 Transmitters
AN/SRC-23 Transceivers (RT-l799) (designed for Link-11)
URR-67 Receivers
CU-2035/1780/1781 (Modified SRA-34) Transmitter Multi couplers
CU-1901 Receiver coupler
AN/SRA-51 Receiver Coupler
SA-1865/UR (Modified SA-1070) Transmitter Switching Matrix

Some of the ships in the LHA class are in the process of replacing this collection of equipment and being upgraded to a more modern narrowband systems or to a broadband system. Specific configuration will to be determined in a future time.

D.2.4 CV Narrowband HF Configuration

The CV narrowband HF configuration, based on the standard narrowband HF configuration, was designed around 1 960s vintage transmitters and receivers. Like the standard narrowband HF configuration, this collection of equipment has to be patched together to meet circuit configuration requirements. This configuration also applied to CG/CGN class ships (since decommissioned), such as the CG-16/27 classes.

- CV/CVN class HF configuration consists of:

  AN/SRC-16 (four channel) Transceiver (designed for Link-11)
  AN/URT-23 Transmitters
  R-1051 Receivers
  CU-1169/SRA-34) Transmitter Multicouplers
  AN/SRA-57 Transmitter Multicoupler
  CU-1070/SRA-16 Transmitter Multicoupler
  AN/URA-38 Transmitter Antenna Coupler
  AN/SRA-49 Receiver Multicoupler
  CU-2 113 CARTS for Receivers
  SA-1070 RF Transmitter Switch Matrix

- Upgraded CV class HF configuration consists of the following changes:

  AN/SRC-23 Transceiver (for use by Link-11, replaced the SRC-16 and its associated CU-070/SRA-16 Multicoupler)
  AN/SRA-58 Transmitter Multi couplers was added
  AN/SRA-38/39/40 Receiver Multicouplers (replaced the AN/SRA-49 Receiver Multi couplers)

D.3 BROADBAND EQUIPMENT

As technology has advanced, demand for greater communications capability has increased. For example, the use of binary files for exchanging stored information or imagery has increased over the years, but is incompatible with traditional 75 bps teletype circuits. New technologies have been developed that now make the use of binary data transfers feasible. New high speed serial tone modems make it possible to transfer large, binary data files at data rates more attuned to those required by today's operational requirements.

Because of technological developments in HF communications, new groups of equipment are being installed, or planned for installation, including: high speed serial tone modems, computerized equipment controllers, and broadband technology. Broadband technology is based on the ability to transmit on multiple HF circuits using a single, common antenna system, or spread a signal in frequency so that it requires an antenna tuning device capable of matching impedance across a broad spectrum simultaneously. Among these new technology and equipments are communications systems that are characterized by broadband antenna systems, computerized controllers, and rapid tuning transmitting and receiving subsystems that are capable of rapid frequency shifting, automatic tuning, and remote controllability. Broadband systems often provide for modular technological enhancements as they become available, such as ALE technology.

With the new broadband characteristics, broadband communications systems provide the warfighter a whole new capability that was not available before. With the new rapid tuning capability, it is possible to support multiple lightly-loaded services with a single exciter. Instead of dedicating individual exciters and receivers to several services that has a very low usage, it is conceivable that these services be "grouped together" and supported by a single exciter and receiver. For example, as a user keys a teletype, the exciter and receiver change frequencies in real time.

Broadband communications systems are not only capable of supporting the existing circuit-based architecture, they can support a service-based architecture. This service-based architecture will require smart "switching systems" consistent with the CSS-based communications-based architecture,

and the warfighting C4I architecture, “C4I for the Warrior. Broadband systems can support the new communications and warfighting requirements in Naval, Joint and combined operations.

In providing a single system to meet all communications requirements, all current and planned systems must include one or more integrated narrowband subsystems to support specialized connectivity requirements. Even though a broadband system will support connectivity with narrowband equipment, specialized circuits such as the existing Link-11 present an unique requirement for a narrowband, mutlitone waveform.

Figure D-2 is representative of a typical broadband communications architecture. It illustrates a transmit subsystem and a receive subsystem.

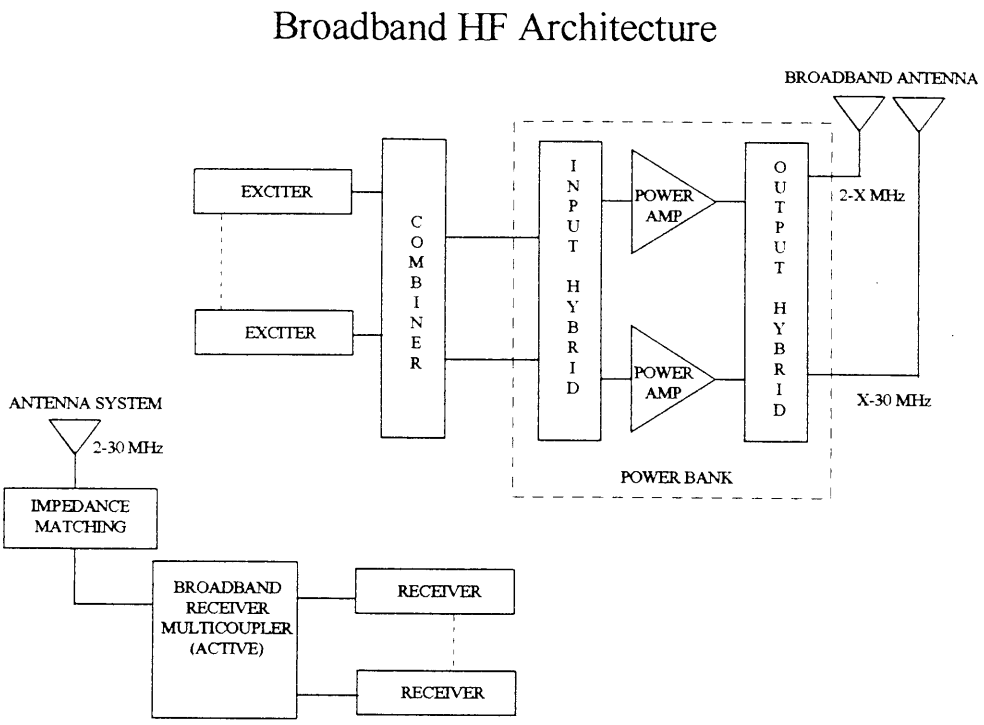

Figure D-2. Generic broadband HF system.

D.3.1 Existing Broad band Equipment

The LHD-1 class is the first ship class to be equipped with a broadband system, the AN/URC-109. This broadband system includes power control capability, rapid transmitter and receiver tuning, and an integrated broadband antenna system to reduce the number of topside antennas. Incremental upgrades are likely for maintenance and reliability purposes or to add new technologies as they evolve. The AN/URC-109 does not have an inherent ALE capability. To add ALE requires a modification by installing scanning receivers and other peripheral equipment.

D.3.2 New Ship Broadband Equipment

The next generation broadband HF communications system is the AN/URC-13 1. Operationally similar to the AN/URC-109, it incorporates a greater degree of flexibility. Characteristics include: full communications plan initiation in under 10 minutes, full restoration from a power loss condition in one to two minutes, and new communications plan configuration in several seconds from a stored

communications plan. Using broadband antenna systems with rapid impedance matching, frequency shifts take milliseconds instead of minutes to tens of minutes, which is a capability optimal for supporting ALE standards. Service restoration could be transparent to operators if both sides had the AN/URC-131. The AN/URC-131 with the Shipboard Automatic Communications Control System (SACCS) AN/SSQ-33 and ALE is the key to effectively integrating HF into CSS and the Copernicus/C4I for the Warrior architecture. This is the system currently scheduled for installation on AGF, CV/CVN, LCC, LHA, and CG47. Future installations could include DDG-51, DD-963, DDG-993, FFG-7 and LSD-41 classes [references (12) refers].

D.4 HF EQUIPMENT SUMMARY

Table D-1 summarizes the existing and new HF equipment configurations by ship class where communications suites are standard, by modifications from the standard configuration, or by configuration upgrades. The term “Other Platforms” refers to all ships that were given the standard HF equipment configuration as initial installation. These platforms would include: AGF, LCC, LPD, LPH, logistic ship, and other combatants and auxiliaries. Equipments are grouped by their functional areas such as transmitters and receivers or transmitting and receiving multicouplers. These configurations are used in Section Three to determine platform capability to support the different ALE configurations identified in Section Two.

Table D-1. Installed HF equipment versus ship classes.

	CG-47-CG-53	CG-54-CG-74	CV CVN	DD-963/ DDG-993	DDG-51	LHA	LHD	Other Platforms
TRANSMITTERS								
AN/URT-23 (A-D)		S	S		S			S
AN/URT-23 (E)								
T-1322/AM-6675 (Modified AM-3924)	M			M				
AN/URT-38						M		
AN/SRC-23 (Xmt side)			U			M		
AN/URC-81(Xmt side)						M		
AN/URC-109 (BB Xmt side)							S	
AN/URC-131 (BB Xmt side)								
RECEIVERS								
R-1051			S					S
R-2368/URR-79		S			S			
R-1903	M			M				
URR-67						M		
AN/SRC-23 (Rcv side)			U					
AN/URC-81 (Rcv side)						M		
AN/URC-109 (BB Rcv side)							S	
AN/URC-131 (BB Rcv side)								
XMT MULTICOUPLERS								
AN/SRA-56 (2-6 MHz)		S			S			S
AN/SRA-57 (4-12 MHz)		S	S		S			S
AN/SRA-58 (10-30 MHz)		S	U		S			S
CU-1169/SRA-34			S					
CU-1780						M		
CU-1781						M		
CU-2035						M		
OE-219	M			M				
OE-232	M			M				
OE-231	M			M				

S Standard HF configuration
U Upgraded HF configuration
M Modified HF configuration

Table D-1. Installed HF equipment versus ship classes (Continued).

	CG-47-CG-53	CG-54-CG-74	CV CVN	DD-963/ DDG-993	DDG-51	LHA	LHD	Other Platforms
XMT MULTICOUPLERS (Cont)								
AN/URC-109 BB Output Hybrid							S	
AN/URC-131 BB Output Hybrid								
XMT ANTENNA COUPLER								
AN/URA-38 (2-30 MHz)	S	S	S	S				S
RCVR MULTICOUPLERS								
AN/SRA-38			U					
AN/SRA-39			U					
AN/SRA-40			U					
AN/SRA-49		S	S(U)		S			S
AN/SRA-51						M		
CU-1901						M		
OA-8796 (Mod SRA-49)	M			M				
AN/URC-109 BB (XXX)							S	
AN/URC-131 BB (XXX)								
OTHER COMPONENTS								
Manual RF Switching Matrix		S			S			S
CU-2096 (Rcvr Diplexer)				M				
CU-2113 (CARTS for Rcvr)	M	S	M	M	S			S
SA-1070 (RF Xmt Switch Matrix)	M		M	M				

S Standard HF configuration
U Upgraded HF configuration
M Modified HF configuration

APPENDIX E
CONFIGURATION ANALYSIS

E.1 ALE TRANSITION OPTIONS

The transition plan was developed after considering the capabilities of the various options and combinations of options. Not all potential **ALE** configurations were considered for this analysis due to their limited performance figures. Option 2 was not considered because it lacked any significant gains in **ALE** capability. Options 3A/B/3C were not considered due to their relatively low performance as compared to Options 3D and **3E.** The analysis was conducted on the following configurations:

- Implementation of Option 4 (Broadband System) only
- Implementation of Option 3P (Broadband Receiving Subsystem) only
- Implementation of Option 3E (Broadband Receiving Subsystem, with an AN/SRA-49 and an RF pre-selector) only
- Implementation of a mix of the optimal configuration (Option 4) augmented by the three less capable configurations to determine if an evolutionary approach would meet the technical and operational requirements of **ALE.**

E.2 OPTION 4 (BROADBAND SYSTEM) ONLY

The AN/URC-131 and the AN/URC-109 that are installed on LHD class are the goal systems for HF 2000. Option 4 is based on these broadband communications systems with the MIL-STD-188-141A-compliant **ALE** modification kits. This is the only option that meets all operational, technical, and standards requirements for full **ALE.**

This option was examined on the basis that all ships were equipped with a full broadband system. The AN/URC-131 and the AN/URC-109 are the two broadband communications systems that are currently available. The AN/URC-131 and the AN/URC-109 are functionally similar, and the implementation of Option 4 with the two systems have similar modification requirements.

The AN/URC-109 requires a modification kit to provide for **ALE** scanning. This modification requires the addition of at least two H2250 scanning receivers with embedded demodulators, decoders, and controllers, and two Hl 550 exciters with built-in encoding and modulation functions. This capability would support the LHD at a cost of less than $400K for all AN/URC-109 platforms. The estimated per unit cost varies from $97.7K for one unit to $52.3K each for all units and a training site. (This option is being installed on some LHDs ahead of the scheduled POM installation [reference (11)].)

The AN/URC-131 is the goal communications system for HF 2000. The AN/URC-131 implementation will require a similar modification for adding **ALE.** The POM implementation plans call for implementation of the AN/URC-131 on all command flagships (AGF, CV/CVN, LCC, and LHAs), and major combatant classes (CG-47, DD-963/DDG-993, and DDG-5 1). The AN/URC-131 is being installed on selected units in FY95, and **ALE** modification kits are under development.

Without a broadband system such as the AN/URC-131 and the AN/URC-109, it is not possible to implement Option 4. And without Option 4, **ALE** will not be able to support the multiple circuit capability necessary to transition to communication plans designed to use **ALE** Currently, there are

insufficient numbers of either systems planned in the POM implementation plan to provide more than the command platforms with a full broadband system. The LPDs and LSDs are not scheduled to receive these systems, which will be critical for the use of **ALE** with U.S. Marine Corps (and potentially U.S. Army) units ashore. Another major deficiency is the lack of planned funding for the logistics support ships other than the AOEs. Without full **ALE** capability in other logistics support ships they cannot be participants on the **ALE** nets. More importantly, if communications plans are designed around frequency pools, these platforms will not be effective participants in this new communications allocation plans.

E.3 OPTION 3D (BROADBAND RECEIVING SUBSYSTEM) ONLY

The implementation of this option is for non-AN/URC-109 ships only. (The AN/URC109 is already installed on the LHD-1 class and will not be removed. For the purposes of this discussion, the AN/URC-109 transmit subsystem is not considered except when it may be used by the "polling" **ALE** platform.) This option provides an upgradeable path to a full **ALE** installation with the addition of a broadband transmit subsection. Until the broadband transmitter subsystem is installed the effective use of **ALE** will require use of workarounds previously described to compensate for use of manual transmitter tuning.

This option may be limited by the number of frequencies the receiver can scan if the number of allocated frequencies exceeds the normal 100 channels available for storage of channel information. Should the pooling of frequencies be implemented as part of the communications plan, this option will provide a capability for using any frequency with any service when required.

Using this option requires procuring new, broadband receiving systems based on a modified AN/URC-109 or AN/URC-131 broadband receiver subsystems, for all ships, less LHD. If the transmitter could not respond to a LQA call-up rapidly, even though it responds within the MIL-STD criteria, it could have a detrimental operational effect interoperability with USMC and USAF ALE-supported communications.

E.4 OPTION 3E (BROADBAND RECEIVING SUBSYSTEM—AN/SRA-49 AND PRESELECTOR CONFIGURATION) ONLY

Functionally, this option is similar to the implementation of Option 3P ,but it demonstrated a better gain figure during tests reported in reference (10). Additionally, it is less costly to implement due to the low cost of the pre-selector compared to multiple component procurement required for Option 3D. This implementation is for non-AN/URC-109 ships only. This option would make use of existing fleet communications systems, requiring minimal changes to the fleet platforms' equipment suites. This option has the same response time limitation as all Option 3 configurations due to the use of manually tuned transmitters. If this option is implemented fleetwide, the effective use of **ALE** will require use of workarounds previously described to compensate for use of manual transmitter tuning.

If technology provides a means for rapid and automatic tuning of transmitters and transmitting couplers in the near future, it would be possible upgrade this communications configuration and to permit the **ALE** system to operate at full capability.

E.5 COMBINATION OF OPTION 4 (BROADBAND SYSTEM) AND OPTION 3D (BROADBAND RECEIVING SUBSYSTEM)

This combination is based on the assumption that a full AN/URC-13 1/109 capability will be provided to the major command flagships and the primary combatants in the fleet which are identified as

Priority 1 for **ALE** implementation. The less capable Option 3P, Broadband Receiving Subsystem, will be provided to platforms with Priorities 2 and 3 for **ALE** implementation. Although this solution does not provide full **ALE** capability across the board, it has a fair capability and is cost-effective if the ultimate goal is to upgrade the Priority 2 and 3 platforms to full broadband systems in the future. If the goal is not to fund the upgrade to a full broadband system, the initial cost for the broadband receive subsystem is not cost-effective for the limited increase in capability it will provide.

E.6 COMBINATION OF OPTION 4 AND OPTION 3E (BROADBAND RECEIVING SUBSYSTEM—AN/SRA-49 AND PRE-SELECTOR CONFIGURATION)

This combination is based on the assumption that a full AN/URC-131/109 capability will be provided to the major command flagships and the primary combatants in the fleet, which are identified as Priority 1 for **ALE** implementation. The less capable Option 3E, Broadband Receiving Subsystem using an RF pre-selector will be provided to platforms with Priorities 2 and 3 for **ALE** implementation. This combination will provide a lower **ALE** capability. This combination is cost-effective in that it provides a limited access to **ALE** monitoring to all nonflagships for the minimal cost of adding an RF pre-selector, along with the **ALE** core equipment if not already installed. (The Option 3E configuration is estimated to cost approximately $20,000 to procure a pre-selector, a scanning receiver, and an **ALEM/C.)** The Option 3E portion of this combination can only be upgraded to a full **ALE** capability if technology provides a means for rapid and automatic tuning of transmitters and transmitting couplers in the near future. In the interim, workarounds would be required to reduce the effects of manually tuned transmitters.

E.7 COMBINATION OF OPTION 4 AND OPTION 1 (AUTOMATIC ALE TRANSCEIVER SUBSYSTEM)

This combination is based on the assumption that a full AN/URC-131/109 capability will be provided to the major command flagships and the primary combatants in the fleet, which are identified as Priority 1 for **ALE** implementation. Platforms with Priorities 2 and 3 for **ALE** implementation will be provided with a minimum set of Option 1 equipment to support **ALE** for one or two circuits. This combination is considered cost-effective in that it provides a full **ALE** capability to all platforms for a medium cost. (The Option 1 configuration is estimated to cost $60,000 to $75,000 for an automatic, remote tuning transceiver with antenna coupler, **ALEM/C,** and an operator's terminal. This assumes an existing antenna will be used with the automatic tuning coupler.) Platforms with the Option 1 configuration will not be upgradeable to a full **ALE** capability on all circuits without a completion reconfiguration or upgrade in equipment.

The drawback of Option 1 is that it does not reduce the number of antennas on a platform, and could conceivably increase them by one to two per transceiver installed unless the transceivers replace a set of transmitters and receivers on a one-for-one basis. In this combination, one or two transceivers are recommended for **ALE** Priorities 2 and 3 platforms, depending on the mission of the platform, which will give them an **ALE** capability for one or two circuits. Operationally, however, this is a viable compromise to provide full **ALE** to all platforms.

E.8 COMBINATION OF OPTION 4, OPTION 3E (BROADBAND RECEIVING SUBSYSTEM—AN/SRA-49 AND PRE-SELECTOR CONFIGURATION) AND OPTION 1 (AUTOMATIC ALE TRANSCEIVER SUBSYSTEM)

This combination is based on the assumption that a full AN/URC-131/109 capability will be provided to the major command flagships and the primary combatants in the fleet, which are identified as Priority 1 for **ALE** implementation. The less capable Option 3E, Broadband Receiving Subsystem

using an RF pre-selector, and Option 1 (Automatic **ALE** Transceiver subsystem) will be provided to platforms with Priorities 2 and 3 for **ALE** implementation. This combination can be considered as a viable alternative solution with a moderate capability. This combination is cost-effective in that it provides a limited access to **ALE** monitoring to all nonflagships for the minimal cost of adding an RF pre-selector to **ALE** core equipment if not already installed.

The Option 3E portion of this combination can be upgraded to a full **ALE** capability if technology provides a means for rapid and automatic tuning of transmitters and transmitting couplers in the near future. Option 1 is considered cost-effective in that it provides a full **ALE** capability to all platforms for a medium cost. Platforms with the Option 1 configuration will not be upgradeable to a full **ALE** capability on all circuits without a complete reconfiguration or equipment upgrade. The combination of Options 3E and Option 1 provide tactical decision makers flexible circuit configuration options not available for any other configuration except full Option 4 implementation. By providing the non-broadband platforms, the transceiver AND the scanning pre-selector, the scanning receiver can be used to monitor the connectivity paths of all HF circuits and can log the results in the data storage channels for up to 100 channels specified in the military standards. When connectivity is lost on a circuit supported by the Option 1 transceiver, the operator could tell the transceiver which channels to scan for automatic circuit re-establishment. It could also tell the operator which frequency to tune the manual transmitters to re-establish circuit connectivity.

REPORT DOCUMENTATION PAGE

Form Approved
OMB No. 0704-0188

Public reporting burden for this collection of information is estimated to average 1 hour per response, including the time for reviewing instructions, searching existing data sources, gathering and maintaining the data needed, and completing and reviewing the collection of information. Send comments regarding this burden estimate or any other aspect of this collection of information, including suggestions for reducing this burden, to Washington Headquarters Services, Directorate for Information Operations and Reports, 1215 Jefferson Davis Highway, Suite 1204, Arlington, VA 22202-4302, and to the Office of Management and Budget, Paperwork Reduction Project (0704-0188), Washington, DC 20503.

1. AGENCY USE ONLY *(Leave blank)*	2. REPORT DATE	3. REPORT TYPE AND DATES COVERED
	April 1995	Final

4. TITLE AND SUBTITLE	5. FUNDING NUMBERS
HIGH FREQUENCY (HF) AUTOMATIC LINK ESTABLISHMENT (ALE) TRANSITION PLAN	PE: 0204163N AN: X0725
6. AUTHOR(S)	

7. PERFORMING ORGANIZATION NAME(S) AND ADDRESS(ES)		8. PERFORMING ORGANIZATION REPORT NUMBER
Ogden Government Services Corporation 7480 Mission Valley Road, Suite 101 San Diego, CA 92108−4406	SEMCOR, Inc. 5030 Camino De La Siesta, Suite 404 San Diego, CA 92108	TD 2760

9. SPONSORING/MONITORING AGENCY NAME(S) AND ADDRESS(ES)	10. SPONSORING/MONITORING AGENCY REPORT NUMBER
Naval Command, Control and Ocean Surveillance Center (NCCOSC) RDT&E Division San Diego, CA 92152−5001	

11. SUPPLEMENTARY NOTES

12a. DISTRIBUTION/AVAILABILITY STATEMENT	12b. DISTRIBUTION CODE
Approved for public release; distribution is unlimited.	

13. ABSTRACT *(Maximum 200 words)*

The High Frequency (HF) Automatic Link Establishment (ALE) Transition Plan describes an evolutionary HF ALE technology transition process that points toward HF 2000, a modern, automated, HF communications system that manages resources to optimize data throughput and minimize operator intervention while maintaining reliable connectivity in even the noisiest environments. The plan also describes a prioritized ALE implementation plan that transitions the Navy to an inter-Battle Group or intra-Battle Group (BG)/.Amphibious Ready Group (ARG) ALE capability that meets Joint/Allied/NATO interoperability requirements.

The HF ALE Transition Plan is based on the full, broadband HF 2000 architecture, which is compliant with MIL−STD−188−141A. The plan provides the warfighter an affordable ALE capability that considers all oeprational concerns.

14. SUBJECT TERMS		15. NUMBER OF PAGES
high frequency inter-Battle Group (BG) HF 2000 architecture	automatic link establishment intra-Battle Group (BG) Amphibious Ready Group (ARG)	16. PRICE CODE

17. SECURITY CLASSIFICATION OF REPORT	18. SECURITY CLASSIFICATION OF THIS PAGE	19. SECURITY CLASSIFICATION OF ABSTRACT	20. LIMITATION OF ABSTRACT
UNCLASSIFIED	UNCLASSIFIED	UNCLASSIFIED	SAME AS REPORT